R-3896-4

TECHNICAL MANUAL

ILLUSTRATED PARTS BREAKDOWN

F-1 ROCKET ENGINE

(ROCKETDYNE)

CHANGE NOTICE

LATEST CHANGED PAGES SUPERSEDE THE SAME PAGES OF PREVIOUS DATE

Insert changed pages into basic publication. Destroy superseded pages.

PUBLISHED UNDER AUTHORITY OF THE NATIONAL AERONAUTICS AND SPACE ADMINISTRATION

23 JANUARY 1970

CHANGE NO. 3 – 28 APRIL 1972

LIST OF EFFECTIVE PAGES

TOTAL NUMBER OF PAGES IN THIS PUBLICATION IS 298 CONSISTING OF THE FOLLOWING:

Page No	Change No	Issue
Title	3	28 Apr 72
A	3	28 Apr 72
i	3	28 Apr 72
ii	1	31 Jul 70
1-1 thru 1-2	3	28 Apr 72
1-3	0	Original
1-4	3	28 Apr 72
1-5	1	31 Jul 70
1-6	3	28 Apr 72
1-6A/1-6B	2	12 Feb 71
1-7	3	28 Apr 72
1-8 thru 1-9	0	Original
1-10	2	12 Feb 71
1-11 thru 1-16	3	28 Apr 72
1-17 thru 1-18	1	31 Jul 70
1-19 thru 1-20	2	12 Feb 71
1-21/1-22	3	28 Apr 72
2-1	0	Original
2-2	2	12 Feb 71
2-3	0	Original
2-4	2	12 Feb 71
2-5 thru 2-6	0	Original
2-7	1	31 Jul 70
2-8 thru 2-9	3	28 Apr 72
2-10 thru 2-11	0	Original
2-12	3	28 Apr 72
2-13 thru 2-14	1	31 Jul 70
2-15	0	Original
2-16 thru 2-17	1	31 Jul 70
2-18 thru 2-22	3	28 Apr 72
2-23	0	Original
2-24	1	31 Jul 70
2-25	0	Original
2-26 thru 2-29	1	31 Jul 70
2-30 thru 2-31	3	28 Apr 72
2-32 thru 2-34	1	31 Jul 70
2-35 thru 2-38	0	Original
2-39 thru 2-40	3	28 Apr 72
2-41	1	31 Jul 70
2-42 thru 2-45	2	12 Feb 71
2-46 thru 2-48	3	28 Apr 72
2-49 thru 2-50	1	31 Jul 70
2-51 thru 2-53	0	Original
2-54 thru 2-60	1	31 Jul 70
2-61 thru 2-62	2	12 Feb 71
2-63	1	31 Jul 70
2-64 thru 2-65	3	28 Apr 72
2-66 thru 2-68	1	31 Jul 70
2-69	0	Original
2-70	1	31 Jul 70
2-71	2	12 Feb 71
2-72 thru 2-73	0	Original
2-74	1	31 Jul 70
2-75 thru 2-76	0	Original
2-77 thru 2-82	1	31 Jul 70
2-83	0	Original
2-84	3	28 Apr 72
2-85	0	Original
2-86	1	31 Jul 70
2-87	0	Original
2-88 thru 2-90	1	31 Jul 70
2-91	0	Original
2-92 thru 2-93	1	31 Jul 70
2-94	3	28 Apr 72
2-95 thru 2-96	0	Original
2-96A/2-96P	3	28 Apr 72
2-97	3	28 Apr 72
2-98	0	Original
2-99	3	28 Apr 72
2-100	2	12 Feb 71
2-101 thru 2-102	3	28 Apr 72
2-103	1	31 Jul 70
2-104	3	28 Apr 72
2-105	0	Original
2-106 thru 2-109	3	28 Apr 72
2-110	0	Original
2-111 thru 2-116	3	28 Apr 72
2-117 thru 2-124	0	Original
2-125 thru 2-126	3	28 Apr 72
2-127 thru 2-130	0	Original
2-131 thru 2-132	3	28 Apr 72
2-133 thru 2-134	0	Original
2-135	3	28 Apr 72
2-136	0	Original
2-137 thru 2-147	3	28 Apr 72
2-148 thru 2-150	0	Original
2-151 thru 2-152	1	31 Jul 70
2-153 thru 2-155	0	Original
2-156 thru 2-160	1	31 Jul 70
2-161 thru 2-165	0	Original
2-166 thru 2-171	1	31 Jul 70
2-172	3	28 Apr 72
2-173 thru 2-175	2	12 Feb 71
2-176	3	28 Apr 72
2-177	2	12 Feb 71
2-178	3	28 Apr 72
2-179	1	31 Jul 70
2-180 thru 2-181	2	12 Feb 71
2-182	0	Original
2-183	3	28 Apr 72
2-184	1	31 Jul 70
2-185	2	12 Feb 71
2-186	3	28 Apr 72
2-187 thru 2-189	0	Original
2-190 thru 2-192	2	12 Feb 71
2-193 thru 2-194A/2-194B	1	31 Jul 70
2-195	2	12 Feb 71
2-196	0	Original
2-197	2	12 Feb 71
2-198 thru 2-199	0	Original
2-200	2	12 Feb 71
2-201	0	Original
2-202	2	12 Feb 71
2-203	0	Original
2-204	1	31 Jul 70
2-205	2	12 Feb 71
2-206 thru 2-207	1	31 Jul 70
2-208 thru 2-209	2	12 Feb 71
2-210 thru 2-211	0	Original
2-212 thru 2-216	2	12 Feb 71
2-217	0	Original
2-218 thru 2-219	2	12 Feb 71
2-220	0	Original
2-221	2	12 Feb 71
2-222	1	31 Jul 70
2-223	2	12 Feb 71
2-224	1	31 Jul 70
2-225 thru 2-226A/2-226B	2	12 Feb 71
2-227	0	Original
2-228 thru 2-229	2	12 Feb 71
2-230 thru 2-231	0	Original
2-232 thru 2-234	2	12 Feb 71
2-235	3	28 Apr 72
2-236	1	31 Jul 70
2-236A	3	28 Apr 72
2-236B	1	31 Jul 70
2-237 thru 2-239/2-240	1	31 Jul 70
3-1 thru 3-19	3	28 Apr 72
3-20	0	Original
A-1	1	31 Jul 70
A-2	3	28 Apr 72

Upon receipt of the second and subsequent changes to this technical manual, personnel responsible for maintaining this publication in current status will ascertain that all previous changes have been received and incorporated. Action should be taken promptly if the publication is incomplete

This page reflects the current status of the complete manual. All pages listed must be in the manual to make this publication current and complete.

TABLE OF CONTENTS

PARAGRAPH	TITLE	PAGE
	SECTION I INTRODUCTION	
1-3	F-1 MANUALS—THEIR SUPPORT FUNCTIONS	1-1
1-1	How to Maintain Your Manual	1-7
1-6	INTRODUCTION SECTION	1-5
1-8	How to Locate a Part	1-5
1-9	Abbreviations	1-5
1-10	GROUP ASSEMBLY PARTS LIST SECTION	1-5
1-12	Reference Designation	1-5
1-13	Clean Code	1-5
1-14	Manufacturers Code	1-5
1-15	Usable on Codes	1-6
1-18	NUMERICAL INDEX SECTION	1-6
1-19A	Standard Part Numbers	1-6
1-20	Repair Codes	1-6
1-21	CONFIGURATION IDENTIFICATION	1-6
1-22	Equipment Configuration	1-6
1-23	MD Identification Symbols	1-6
1-7	MD System	1-17
1-24	Manual Reference	1-6
1-25	CONFIGURATION CHANGES—MANUAL EFFECTIVITY	1-6
	SECTION II GROUP ASSEMBLY PARTS LIST	
FIGURE	TITLE	PAGE
	ROCKET ENGINE	
1	Rocket Engine Assembly	2-2
	PRESSURIZATION SYSTEM	
2	Pressurization System Installation—No. 2 Side	2-5
	PROPELLANT FEED SYSTEM	
3	(Deleted)	
4	(Deleted)	
5	Propellant Feed System Installation—No. 1 Side	2-10
6	Propellant Feed System Installation—No. 2 Side	2-22
7	Engine Interface Panel	2-35
8	(Deleted)	
9	Thrust Chamber Assembly	2-41
10	Turbopump Oxidizer Assembly	2-44
11	Turbopump Turbine Assembly	2-46
12	Turbopump Bearing Coolant Control Valve, Connecting Lines, and Supports	2-49
13	Turbopump Electrical and Fuel Lines	2-51
14	Bearing Coolant Control Valve Assembly (Three Filter Type)	2-59
15	Oxidizer Valve Assembly	2-61
16	Oxidizer Dome Purge Check Valve Assembly	2-66
17	Purge Check Valve Assembly	2-67
18	Inert Prefill Check Valve Assembly (Prefill Check Valve)	2-68
19	Fuel Valve Assembly	2-69
	HYDRAULIC CONTROL SYSTEM	
20	Hydraulic Control System	2-71
21	Checkout Valve Assembly	2-87
22	Hypergol Manifold Assembly	2-89
23	Ignition Monitor Valve Assembly	2-91
24	Three-Way Solenoid Valve Assembly (Redundant Shutdown Valve)	2-93
25	Hydraulic Filter and Four-Way Solenoid Valve (Engine Control Valve)	2-94
26	Hydraulic Control Valve Assembly	2-96
26A	Start and Stop Solenoid Valves	2-97
	GAS GENERATOR SYSTEM	
27	Gas Generator System Installation	2-98
28	Gas Generator Assembly	2-103
29	Gas Generator Ball Valve Assembly	2-105
	ELECTRICAL SYSTEM	
30	(Deleted)	
31	Electrical System Installation	2-108
	INSTRUMENTATION	
32	(Deleted)	
33	Flight Instrumentation Installation (Engines F-2029 Through F-2042)	2-117
34	Flight Instrumentation Installation (Engines F-2043 Through F-2098)	2-130
35	(Deleted)	
36	Static-Firing Instrumentation Installation (Engines F-2029 Through F-2042) (View I)	2-148
37	Static-Firing Instrumentation Installation (Engines F-2029 Through F-2042) (View II)	2-153
38	Static-Firing Instrumentation Installation (Engines F-2043 Through F-2098)	2-161
	LOOSE EQUIPMENT	
39	Loose Equipment Installation	2-173

Underlined numbers in section I denote figures. Underlined titles denote primary paragraphs or systems.

TABLE OF CONTENTS
(continued)

FIGURE	TITLE	PAGE
	ENGINE CLOSURES	
40	Engine Closures	2-179
41	Engine Thrust Chamber Manifold and Propellant Duct Closures	2-181
42	Engine Pressurization Duct Closures	2-183
	COMPONENT CLOSURES	
43	Pressurization Heat Exchanger, Oxidizer Flowmeter, and Duct Closures	2-184
44	Thrust Chamber Closures	2-187
45	Turbopump Closures	2-193
46	Oxidizer Valve Closures	2-196
47	Fuel Valve Closures	2-199
48	Coolant Valve Closures	2-201
49	Propellant Feed Duct and Elbow Closures	2-203
50	Propellant Feed Line and Manifold Closures	2-206
51	Hydraulic Control Line Closures	2-210
52	Hydraulic Checkout Valve Closures	2-215
53	Hypergol Manifold and Ignition Monitor Valve Closures	2-217
54	Hydraulic Filter Manifold and Control Valve Closures	2-220
55	Gas Generator Closures	2-222
56	Gas Generator Control Valve Closures	2-224
57	Gas Generator Line Closures	2-226
58	Loose Equipment Line Closures	2-227
59	Flexible Hose Line Closures	2-230
60	Electrical and Instrumentation Line Closures	2-234
61	Alternate Closures Installation	2-235
61A	Seal Plate Closures	2-235
61B	Prefill Check Valve and Orifice Plate Closures	2-235
61C	Hypergol Cartridge Closure	2-236
61D	Pressure-Actuated or Instrumentation Seals Closure	2-236
	ELECTRICAL CONNECTOR GASKETS AND DUST CAPS	
62	Coupling Nut Gaskets and Closures for Electrical Plugs and Receptacles	2-236B

	TITLE	PAGE
	SECTION III NUMERICAL INDEX	
	Numerical Index	3-1
	APPENDIX	
	MANUAL DATA SUPPLEMENTS	A-1

Underlined titles denote primary systems.

SECTION I

INTRODUCTION

1-1. This manual is one of seven R-3896-series technical manuals prepared to provide official Rocketdyne field support documentation for the operation and maintenance of the F-1 Rocket Engine, Part Number 104001, Serial Numbers F-2029 through F-2C98, and its related ground support equipment, designed and manufactured by Rocketdyne, a division of North American Rockwell Corporation, 6633 Canoga Avenue, Canoga Park, California 91304. The information in these manuals was prepared by Logistics Product Support Department of Rocketdyne.

1-2. The manuals are used to best advantage when each manual is current and complete (see figure 1-1) and the purpose and scope of each manual is known. The manuals in this series, and the nature of the data each provides, are found in the contents and support function chart.

1-3. F-1 MANUALS--THEIR SUPPORT FUNCTIONS.

1-4. The contents and support function chart lists all F-1 series technical manuals, describes the support function each manual serves, and lists the section titles of each manual. The chart also explains how the technical data in each manual relates to the support of the engine and its ground support equipment throughout a normal engine flow, as well as during unscheduled maintenance tasks. Information appearing in one manual is not duplicated in another. Thus, information on the description, operation, and maintenance of ground support equipment is in R-3896-5. However, the instructions for servicing the engine using ground support equipment are in R-3896-3 and R-3896-11.

Manual	Contents and Support Function	Section and Title	
R-3896-1 F-1 Rocket Engine Data	This manual contains a physical description of the various F-1 engine systems and the individual engine system components; a description of the flow the engine follows from the time it is accepted by the Customer through Apollo/Saturn V launch; data pertaining to engine design characteristics including environmental conditions, attitude, mass properties data, turbopump inlet propellant conditions, and interface connections for mating the engine with the S-IC of the Saturn V vehicle; and nominal engine performance characteristics, methods for predicting engine variable characteristics, and other pertinent information that can be used as an aid for analyzing and/or determining specific engine performance. The manual serves to familiarize the reader with the design and operation of the F-1 engine and serves as a training aid document.	I II III	Description and Operation Interface Design Criteria Performance

Manual	Contents and Support Function	Section and Title
R-3896-3, Volume I F-1 Rocket Engine Maintenance and Repair	This manual contains general maintenance practices that are peculiar to the engine covered in this volume and to the component repair procedures contained in Volume II of this manual; the use of engine, thrust chamber, and nozzle extension ground support equipment and the tasks necessary to prepare the equipment for maintenance using the applicable pieces of ground support equipment; detailed procedures for component removal, reinstallation, or replacement, and the post-installation test requirements that will verify the integrity of engine systems affected by the removal of individual engine components and lines. This volume and Volume II provide the necessary maintenance and repair data to perform unscheduled maintenance tasks on an uninstalled engine and the required post-maintenance tests to determine that the engine is in an operable condition.	I General Maintenance and Repair II Handling III Component Removal and Installation IV Post-Maintenance Test Requirements
R-3896-3, Volume II F-1 Rocket Engine Maintenance and Repair	This manual contains cleaning, inspecting, repairing, and testing procedures for the individual engine components. This manual provides the data to restore and/or maintain components of the engine in an operable condition for reinstallation on the engine or assignment as a spare.	I Quick-Disconnect II Gas Generator III Gas Generator Ball Valve IV Gas Generator Injector Purge and Pump Seal Purge Check Valve V Deleted VI Heat Exchanger VII Heat Exchanger Check Valve VIII Thrust Chamber (Installed) IX Thrust Chamber (Uninstalled) X Thrust OK Pressure Switch XI Inert Prefill Check Valve XII Oxidizer Dome Purge Check Valve XIII Oxidizer Valve XIV Fuel Valve XV Turbopump XVA Turbine XVI Bearing Coolant Control Valve XVII Deleted XVIII Electrical Harness XIX Hypergol Manifold XX Ignition Monitor Valve XXI Checkout Valve XXII Engine Control Valve

Manual	Contents and Support Function	Section and Title	
R-3896-3, Volume II (cont)		XXIII	Four-Way Solenoid Valve
		XXIV	Thrust Chamber Nozzle Extension
		XXV	Pressure Transducer
		XXVI	Temperature Transducer
		XXVII	Flight Instrumentation Junction Boxes
		XXVIII	Rigid Ducts, Flexible Lines, and Braided Flex Hoses
		XXIX	Redundant Shutdown Valve
		XXX	Volumetric Liquid Oxygen Transducer (Oxidizer Flowmeter)
		XXXI	Gimbal Boot, Insulation Boot, and Insulation Seal
R-3896-4 F-1 Rocket Engine Illustrated Parts Breakdown	This manual contains illustrative and columnar listings of all parts of the engine that can be disassembled, reassembled, repaired, replaced, or overhauled. This manual locates and identifies the interrelationship of parts, aids in the requisition of replacement parts, indicates part usage and interchangeability and recommended repair or replacement for the F-1 engine and its individual components and parts.	See detailed table of contents for this manual.	
R-3896-5, Volume I F-1 Rocket Engine Ground Support Equipment Maintenance and Operation	This manual contains safety requirements and general maintenance practices peculiar to the equipment covered in this volume and to equipment and T-tools covered in Volume II of this manual; inspection requirements, physical description, operation, intended usage, operating limitations, periodic maintenance, and parts listings with maintenance-level codes for the F-1 engine ground support equipment covered in this volume. This volume provides data to restored and/or maintain the F-1 rocket engine ground support equipment in an operable condition.	I	Safety Requirements, General Maintenance, and Handling and Shipping Equipment
		II	Hydraulic Pumping Unit G2025
		III	Hydraulic Pumping Unit G2026
		IV	Accumulator Unit G2027
		V	Engine Checkout Console G3142
		VI	Pneumatic Flow Monitors G3130 and G3131
		VII	Engine Vertical Installer G4049
		VIII	Engine Rotating Sling G4050
		IX	Flight Combustion Monitor 703227
		X	Components Test Console G3141 and Components Adapter Set G3143
		XI	Cryogenic Supply Unit G3146
		XII	Pneumatic Flow Testers G3104 and G3104MD1

Manual	Contents and Support Function	Section and Title	
R-3896-5, Volume I (cont)		XIII	High-Voltage Igniter Tester G3153 and Inert Igniter 9026622
		XIV	Impact Recorder Unit G4090 and 99-9014031
		XV	Components Welding Sets 9026560, 9026561, and 9026570
R-3896-5, Volume II F-1 Rocket Engine Ground Support Equipment Maintenance and Operation	This manual contains inspection requirements, physical description, operation, intended usage, operating limitations, periodic maintenance, and parts listing with maintenance-level codes for the F-1 engine ground support equipment end items that are considered tools (ie, test kits, sets, and tools) and T-tools. This volume provides data necessary to determine that those items of ground support equipment covered by this volume and the F-1 field T-tools are in an operable condition.	I	Test Kits, Sets, and Tools
		II	T-Tools
		III	Dummy Weight T-Tools
R-3896-6 F-1 Rocket Engine Thermal Insulation Installation and Repair	This manual contains a description of the thermal insulation panels, special tools and equipment, installation and removal procedures, access provisions, repair data, and applicable packaging, storage, and handling information. This manual provides information pertinent to the maintenance and repair of F-1 engine thermal insulation.	I	Description
		II	Special Tools and Equipment
		III	Installation and Removal (Engines F-2003 Through F-2016)
		IV	Installation and Removal (Engines F-2017 and Subsequent)
		V	Access Provisions
		VI	Repair
		VII	Storage and Handling
R-3896-9 F-1 Rocket Engine Transportation	This manual contains procedures for preparing the F-1 rocket engine, nozzle extension, thermal insulation, and miscellaneous engine loose equipment for shipment, and procedures for shipping by truck, air, or water. Included are recommended truck-, air-, and water-transport check lists, which may be used to make sure that procedures and in-transit inspection have been performed.	I	Preparation for Shipping
		II	Shipping by Truck Transport
		III	Shipping by Air Transport
		IV	Shipping by Water Transport

Manual	Contents and Support Function	Section and Title	
R-3896-11 F-1 Rocket Engine Operating Instructions	This manual contains complete, authorized field operating requirements that affect F-1 flight engines F-2029 through F-2098 during normal operational flow from engine receipt at MAF through vehicle launch. Specific and general requirements and procedures for normal F-1 engine activities are provided and include acceptability criteria and limits, special constraints, safety precautions, and correct sequences required to satisfactorily accomplish the activities.	I II III	Operating Requirements General Requirements Operating Procedures

1-5. (Deleted)

1-6. INTRODUCTION SECTION.

1-7. The Introduction explains in detail how to use the manual and the contents of each section. Abbreviations, repair codes, manufacturers codes, usable on codes, MD identification symbols, and the configuration changes--manual effectivity, are listed at the end of the Introduction.

1-8. HOW TO LOCATE A PART. To find a part, whether its number is known or unknown, follow the procedures indicated in figure 1-2.

1-9. ABBREVIATIONS. Abbreviations are used throughout this manual wherever practicable. See figure 1-3 for a list of these abbreviations.

1-10. GROUP ASSEMBLY PARTS LIST SECTION.

1-11. The Group Assembly Parts List, section II, consists of a tabulated listing of all parts required for the support of the engine at the maintenance level. The parts are listed in disassembly order, except where disassembly order does not apply, and keyed to an associated illustration by index numbers. The relation of each part to its associated part is indicated by indention, by cross-reference note, or as attaching parts. Subassemblies and components, except for attaching parts, are listed immediately below their next higher assembly one indention space to the right. The complete description of the part includes, as applicable, footnotes, nomenclature, a Rocketdyne specification control drawing number, a manufacturers code, a reference designation, a clean code, figure cross-references, quantities required per next higher assembly, and usable on codes. To find the quantity required for a REF part, refer to the figure and index referenced in the description of the part.

1-12. REFERENCE DESIGNATION. Reference designations are assigned to electrical parts so that parts called out on wiring diagrams and electrical schematics can be easily traced and identified. The designation is included in the description of the part, such as (P123). In addition, a figure entitled Coupling Nut Gaskets and Closures for Electrical Plugs and Receptacles lists the reference designations in numerical order and relates them to a part number, the next higher assembly, and the index number of the other figures in which they appear.

1-13. CLEAN CODE. A clean code (LC) has been placed at the end of the nomenclature of component parts to indicate that the part must be fine cleaned for propellant, pneumatic, or hydraulic service before being installed on the equipment. Clean components removed from equipment must be maintained in a serviceable condition using the appropriate closures illustrated in figures 40 through 61D. Refer to the component drawing for the applicable cleaning specification and to R-3896-3 for cleaning procedures.

1-14 MANUFACTURERS CODE. When a part manufactured by a contractor other than Rocketdyne is listed, an identifying five-digit numerical code is assigned to the description of the part, such as (MFD by 00000). See

figure 1-4 for list of all manufacturers codes used in this manual, including the corresponding names, addresses, and zip codes.

1-15. USABLE ON CODES. Alphabetical codes are assigned to parts that have limited usage on the engine. Parts that have been added or changed in production or by retrofit action reflect a code. This code can be converted to engine serial number effectivity, and the MD number assigned. by referring to the appropriate headings. When no code is assigned, the part is usable on all engines. See figure 1-5 for a list of all usable on codes contained in this manual.

1-16 and 1-17. (Deleted)

1-18. NUMERICAL INDEX SECTION.

1-19. The Numerical Index, section III, contains an alphanumeric list of all part numbers in the Group Assembly Parts List, section II. Opposite each part number are listed the repair code, the assigned figure and index number in which the part number appears, and a quantity that represents the quantity listed in the figure.

1-19A. STANDARD PARTS. Military or Rocketdyne standard parts, such as bolts, screws, washers, nuts, etc, are listed one time only in the Numerical Index. The figure number or figure and index number indicate the first listing of the part and the quantity reflects the total for that part as listed throughout the Group Assembly Parts List, section II. Military or Rocketdyne standard parts, such as valves, electrical connectors, seals, orifice plates, etc, are also listed, However, these parts are listed, along with their assigned figure number(s), index(es), and quantities as many times as they appear in the Group Assembly Parts List, section II.

1-20. REPAIR CODES. Repair codes are assigned to parts to indicate the recommended repair or replacement site location. These codes are listed in the Numerical Index opposite the applicable part number. The repair codes are divided into two parts, a letter and a numeral. The letter denotes the recommended site location at which the part may be removed and reinstalled/replaced. The numeral denotes the recommended site location at which the part may be repaired. See figure 1-6 for definitions of the repair codes.

1-21. CONFIGURATION IDENTIFICATION.

1-22. EQUIPMENT CONFIGURATION. The MD identification symbol and the equipment model designation indicate the configuration of the equipment and distinguish it from models incorporating different changes and from basic models. A basic, unchanged configuration of the equipment has no MD identification symbol. MD identification symbols are added as changes affecting configuration are incorporated into the equipment. The MD identification symbol is stamped on the MD plate, which is mounted near the engine identification plate.

1-23. MD IDENTIFICATION SYMBOLS. On MD identification plate RD171-1022-0001, the identification symbol is a composite number representing all the changes affecting configuration (MD changes) that are incorporated or not incorporated into the equipment. The symbol represents a consecutively numbered series of MD changes. Multi-digit numbers are underlined. Two figures together represent the limits of a series of incorporated MD changes. Any MD changes. or series of MD changes not incorporated is represented by an "X". Figure 1-7 illustrates how MD changes incorporated in the equipment are represented by the MD identification symbol.

1-23A. MD identification plates RD171-1052-0001 through -0006 have preprinted numbers from 1 through 100 on the -0001 plate, 101 through 200 on the -0002 plate, etc. Modifications that are incorporated into the equipment are represented by the letter P (production) or K (kit) stamped in the square directly to the right of the applicable number. Omission of a P or K, indicates that the MD change is not incorporated. A P or K with a bar (-) marked through the letter (~~P~~, ~~K~~) indicates a MD change deleted in its entirety by the incorporation of a later MD change. Figure 1-7 illustrates how MD changes incorporated into the equipment are represented by the MD identification symbol.

1-24. MANUAL REFERENCE. A reference that appears in the manual may refer to a series of MD changes or to an individual MD change; for example, "MD9" refers to MD1 through MD9, but "MD9 change" refers to the individual MD change 9. When a MD reference appears in this manual, examine the MD identification symbol on the equipment to determine which set of information is applicable.

1-25. CONFIGURATION CHANGES--MANUAL EFFECTIVITY.

1-26. All approved ECPs (Engineering Change Proposals) and associated MD numbers applicable to the equipment covered in this manual are listed in figure 1-8. The date in the last column is the publication date of the manual during which the change made by the ECP was incorporated. When N/A is entered, the ECP does not change the data in the manual.

1-27. Engine configuration information is in R-5857, Saturn F-1 Configuration Identification & Status Report. Engine serial numbers within this manual are in accordance with Rocketdyne F-1 engine designation. For F-1 engine serial number allocation, refer to the cross-reference index in R-5857.

USE YOUR MANUAL ONLY IF CURRENT AND COMPLETE

Manuals that are not current and complete are not authoritative documents and are not to be used. The following outlines the method for determining whether your manual is current and complete.

A. DETERMINING CURRENCY. To be sure that yours is the latest issue of the manual, refer to Configuration Identification & Status Report , which is revised monthly and lists the technical manual numbers, titles, unincorporated supplements, and latest change or revision dates. Your manual must have a title page with the same or later date than the date shown in the Configuration Identification & Status Report Your manual must also include the unincorporated supplements listed in the Configuration Identification & Status Report, or if your manual is later than shown in the report, the unincorporated supplements listed in the Manual Data Supplement Record in your manual. If your title page incorporates two dates as illustrated below, compare the change (lower) date. If your manual is not current, obtain a current copy through your technical manual supply system.

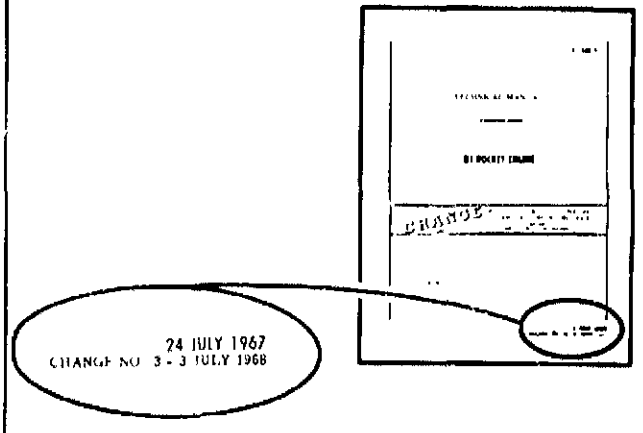

B. DETERMINING COMPLETENESS. To be sure that your manual is complete, make a page-by-page comparison of its pages to those listed in the List of Effective Pages. The List of Effective Pages, which shows the change status since the basic issue or last revision, is found on the alphabetically lettered page(s) immediately following the title page. All pages, except supplements, are listed with their issue dates. Manual pages that are dated must have the same date as that appearing in the List of Effective Pages for that page. Unchanged pages are listed as "original" and are not dated.

HOW TO KEEP YOUR MANUAL UP-TO-DATE

As design changes are made to the rocket engine and ground support equipment and better methods of maintenance are discovered, your manual is periodically changed, revised, or supplemented. The following steps will help you keep your manual up-to-date:

A. CHANGES. Updating by adding to or partially replacing existing pages is defined as a change. Changes can be identified by the change notice on the new title page.

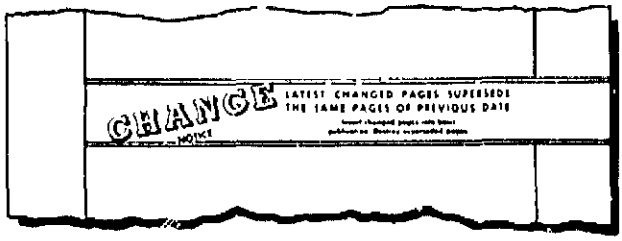

To collate a change, refer to the Filing Instructions sheet issued with the manual and proceed as follows:

1. Remove the pages listed in the "Remove" column of the Filing Instructions sheet from the manual and destroy them. Do not concern yourself with the data on the opposite side of the deleted page since, if this date is not deleted, it is replaced in the change package.

2. Insert all pages listed in the "Insert" column of the Filing Instructions sheet in sequence. Pages with a suffix letter are inserted in alphabetical order following the page with the same basic number; for example, pages 3-14A, 3-14B, etc, follow page 3-14.

GEN-NASA-1A

Figure 1-1. How to Maintain Your Manual (Sheet 1 of 2)

3. If you are unsure of the status of any page or pages, refer to the List of Effective Pages and make sure your manual contains pages (with the corresponding change dates) listed in the List of Effective Pages.

4. Remove manual supplements that have been incorporated.

NOTE

Incorporated supplements can be determined by reviewing the newly issued Manual Data Supplement Record.

B. REVISIONS. Updating by replacing all the existing pages of a manual is defined as a revision. Revisions can be identified by the replacement notice on the new title page.

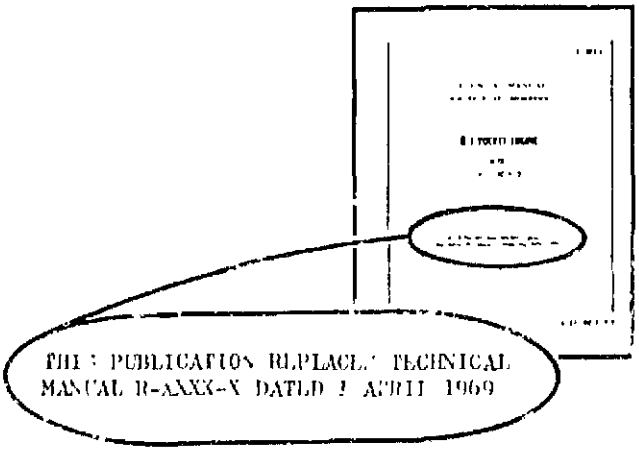

To collate a revision, proceed as follows:

1. Remove and destroy all existing pages of your manual except Manual Data Supplements that have not been incorporated.

NOTE

Unincorporated supplements can be identified by reviewing the Manual Data Supplement Record supplied in the revision.

2. Insert the new pages in your cover.

C. SUPPLEMENTS. Updating that authorizes the addition to, or alteration of, the existing data in your manual is defined as a Manual Data Supplement. Information on how to insert supplements is found in the supplements.

GEN-NASA-2

Figure 1-1. How to Maintain Your Manual (Sheet 2 of 2)

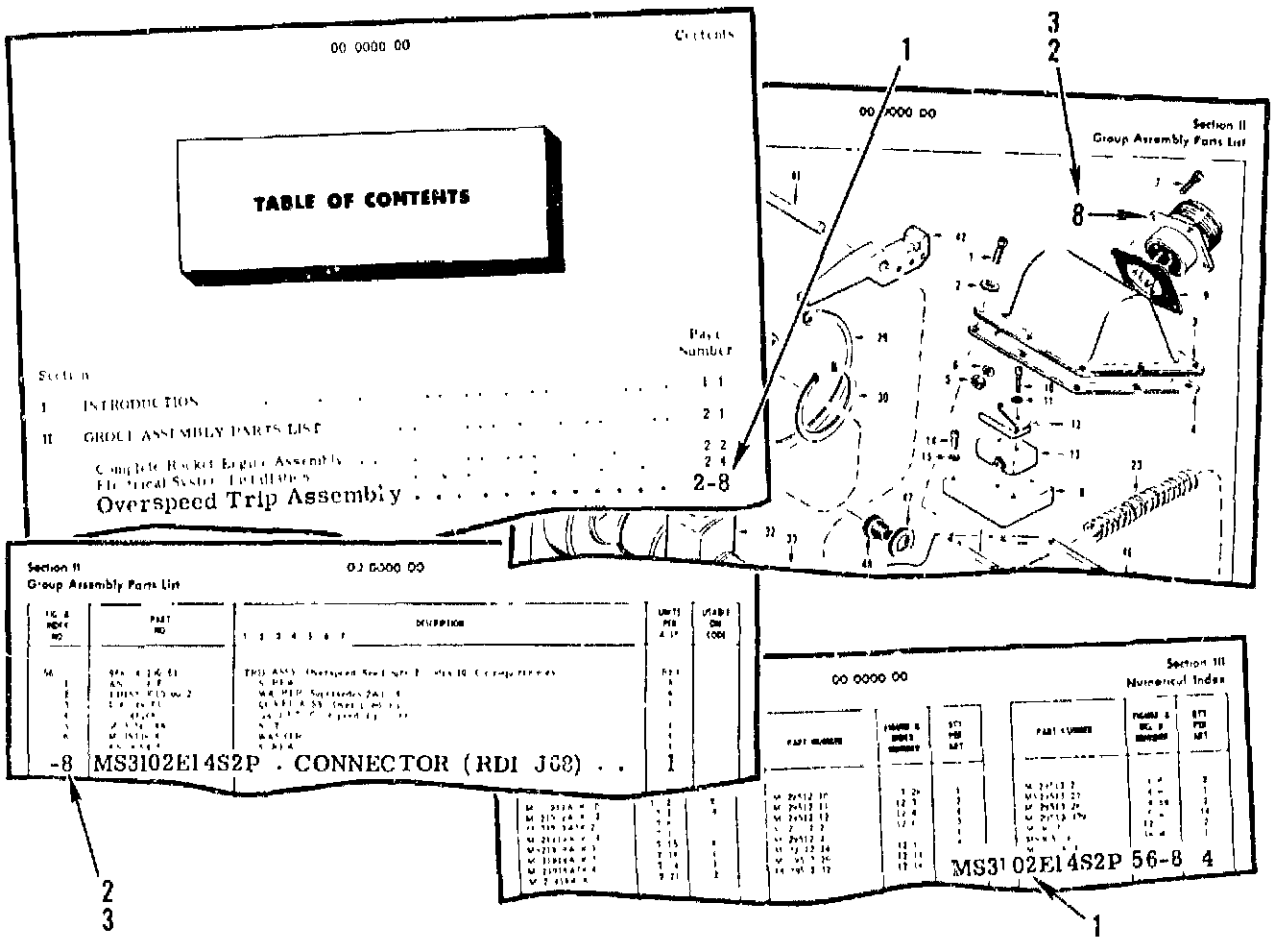

WHEN THE PART NUMBER IS NOT KNOWN

1. Determine the function and application of the part. Turn to the Table of Contents and select the most appropriate title. Note the page number of the title.

2. Turn to the page indicated and locate the desired part on the illustration.

3. From the illustration, obtain the index number assigned to the part. Find the index number in the figure and index number column of the accompanying description for specific information regarding the part.

WHEN THE PART NUMBER IS KNOWN

1. When the part number is known, refer to the Numerical Index. Locate the part number and note the figure and index number assigned to the part number.

2. Turn to the figure number indicated and locate the referenced index number in the figure and index number column of the description accompanying the illustration.

3. If a pictorial presentation of the part, or its location is desired, refer to the same index number of the accompanying illustration.

GEN-IPM-2A

Figure 1-2. How to Locate a Part

Word	Abbreviation	Word	Abbreviation
Alternate	ALT	Not Applicable	N/A
As Required	AR	Next Higher Assembly	NHA
Assembly	ASSY	Number	NO.
Attaching Parts	AP	Nonprocurable	NP
Auxiliary	AUX	Outside Diameter	OD
Breakdown	BRKDN	Part Number	P/N
Corrosion-Resistant Steel	CRES	Pounds per Square Inch	PSI
Deep	D	Pressure	PRESS.
Diameter	DIA	Production	PROD
Engineering Change Proposal	ECP	Quantity	QTY
Heat Exchanger	HE	Reference	REF
Hydraulic	HYD	Return	RET
Hydraulic-Clean	HC	Rocket Propulsion	RP
Head	HD	Retrofit Action	R/A
Hexagon	HEX	Requirements	REQMT
Inside Diameter	ID	Specification	SPEC
Inch	IN.	Subsequent	SUBS or SUBQ
Installation	INSTL	Superseded	SUPSD
Interface	INTFC	Supply	SUP
Kennedy Space Center	KSC	Symmetrical	SYM
LOX/Pneumatic/Fuel-Clean	LC	Thrust Chamber	T/C
Long	LG	To Be Determined	TBD
Liquid Oxygen	LOX	Through	THRU
Maximum	MAX.	Turbopump	T/P
Modified Design	MD	Transducer	TRANS
Manufactured	MFD	With	W/
Modification Instruction	M/I		

Figure 1-3. Abbreviations

Code	Manufacturers Name and Address
00287	CEM Co, Inc, 24 School, Danielson, Conn. 06239
00624	Aeroquip Corp, Aircraft Division, Jackson Plant, 300 S East Ave, Jackson, Mich. 49203
01673	Airdrome Parts Co, 3251 Airport Way, Long Beach, Calif. 90806
02302	North American Rockwell Corporation, Rocketdyne Division, 6633 Canoga Ave, Canoga Park, Calif. 91304
02615	USM Corp, Nylok Fastener Division 611 Industrial Ave, Paramus, N. J. 07652
02697	Parker Seal Co, Division of Parker-Hannifin Corp, 2360 Palumbo Drive, Lexington, Ky. 40509
03038	Long-Lok Corp, 4101 Redwood Ave, Los Angeles, Calif. 90066
03647	Globe Aerospace Division of MSL Industries, Inc, 11307 Vanowen St, North Hollywood, Calif. 91605
04274	Rosemount Engineering Co, 4900 W 78th St, PO Box 35129 Minneapolis, Minn. 55435
04319	Advanced Products Co, 33 Defco Park Rd, North Haven, Conn. 06473
04820	Hermetic Seal Corp, 4232 Temple City Blvd, Rosemead, Calif. 91770
05721	Beckman Instruments, Inc, Scientific and Process Instruments Division, 2500 Harbor Blvd, Fullerton, Calif. 92634
06071	DK Aerospace Co, Division of MSL Industries, Inc, 100 N Island Ave, Batavia, Ill. 60510
06144	Industrial Tectonics, Inc, Bearing Division, 18301 Santa Fe Ave, Compton, Calif. 90224
06185	Del Mfg Co, 905 Monterey Pass Rd, Monterey Park, Calif. 91754
06238	Southwestern Industries, Inc, 5880 W Centinella Ave, Los Angeles, Calif. 90045
07096	Hadbar Division of Purolator, Inc, 733 S Fremont Ave. Alhambra, Calif. 91803
07107	Hydrodyne Division of FPI, Inc, 7041-1/2 Vineland Ave, North Hollywood, Calif. 91605
08199	Technical Industries, Inc, Harrison Mfg Co Division, 3020 Empire Ave, Burbank, Calif. 91503
08524	Deutsch Fastener Corp, PO Box 90925 7001 W Imperial Hwy, Los Angeles, Calif. 90009
09127	Anaconda Metal Hose Division of Anaconda American Brass Co, Los Angeles Plant, 18518 Susana Rd, Compton, Calif. 90221

Figure 1-4. Manufacturers Codes (Sheet 1 of 4)

Code	Manufacturers Name and Address
09268	Titeflex Division of Atlas Corp, Pacific Division, 2978 Nebraska Ave, Santa Monica, Calif. 90404
09384	Bell and Howell Co, Electronics and Instruments Group Transducer Division, 360 Sierra Madre Villa, Pasadena, Calif. 91109
09523	Parker-Hannifin Corp, Accessories Division, 17325 Euclid Ave, Cleveland, Ohio 44112
10630	Anillo Industries, Inc, 2090 N Glassell, Orange, Calif. 92667
11139	Deutsch Co, Electronic Components Division, Municipal Airport, Banning, Calif. 92220
11328	Teledyne Linair Engineering, A Teledyne Co, 651 W Knox St, Gardena, Calif. 90247
11367	Linair, Inc, 1016 E Elizabeth Ave, Linden, N. J. 07036
11532	Teledyne Relays, 3155 W El Segundo Blvd, Hawthorne, Calif. 90250
13466	Device Seals, Inc, 11684 Tuxford, Sun Valley, Calif. 91352
13946	Genisco Technology Corp, Instrument Division, 1533 26th St, Santa Monica, Calif. 90404
14497	Miner and Associates, Inc, 2500 Compton Blvd, Redondo Beach, Calif. 90278
14834	Circle Seal Corp, Microporous Filter Division, P O Box 3666, Anaheim, Calif. 92803
15860	New Hampshire Ball Bearings, Inc, Astro Division, 155 Lexington Ave, Laconia, N. H. 03246
19696	Nova-Netics Corp, 1836 Floradale St, South El Monte, Calif. 91733
20767	Shurclose Seal Co, 17411 E Warren Ave, Detroit, Mich. 48224
21335	Fafnir Bearing Co, The Division of Textron, Inc, 37 Booth St, New Britain, Conn, 06050
21550	Wintec Corp, 5223 W Imperial Hwy, Los Angeles, Calif. 90045
26344	Mite Corp, 466 Blake St, New Haven, Conn. 06515
27199	Vehm Engineering Corp, 5836 Marilyn Ave, Culver City, Calif. 90230
29372	Tridair Industries, Fastener Division, 3000 W Lomita Blvd, Torrance, Calif. 90505
51116	Robintech, Inc, P O Box 630, Mt Kisco, N. Y. 10549
56878	Standard Pressed Steel Co, P O Box 796, Jenkintown, Pa. 19046
57187	Statham Instruments, Inc, 2230 Statham Blvd, Statham Industrial Park, Oxnard, Calif. 93030
70128	Aeroquip Corp, Aircraft Division, Western Plant, 11214 Exposition Blvd, Los Angeles, Calif. 90064

Figure 1-4. Manufacturers Codes (Sheet 2 of 4)

Code	Manufacturers Name and Address
70308	Allied Chemical Corp, P O Box 132M Morristown, N. J. 07960
70472	Associated Spring Corp, 18-30 Main St, Bristol, Conn. 06010
70628	Arrowhead Products Division of Federal-Mogul Corp, 4411 Katella, Los Alamitos, Calif. 90720
71286	Rex Chainbelt, Inc, Camloc Division, 22 Spring Valley Road, Paramus, N. J. 07652
71447	Ametek, California Spring Division, 8401 E Slauson Ave, Pico-Rivera, Calif. 90060
71840	Clevite Corp, Cleveland Graphite Bronze Division, 1700 St. Clair Ave, Cleveland, Ohio 44110
72433	Flexitallic Gasket Co, P O Box 680, Camden, N. J. 08101
73197	Hi-Shear Corp, 2600 Skypark Dr, Torrance, Calif. 90509
73680	Garlock, Inc, 402 Main St, Palmyra, N. Y. 14522
73708	Ellisco, Inc, 4000 North American St, Philadelphia, Pa. 19140
73760	ITT Aerospace Controls, 1200 S Flower St, Burbank, Calif. 91502
75165	Johns-Manville Sales Corp, 22 E 40th St, New York, N. Y. 10016
75237	Kaynar Co, The, Division of Reiner Industries, Inc, 7875 Telegraph Road, Pico-Rivera, Calif. 90660
75370	Koppers Co, Inc, Metal Products Division, Piston Ring and Seal Dept, P O Box 626, Baltimore, Md. 21203
76381	Minnesota Mining and Mfg Co, 3M Center, St Paul, Minn. 55101
77308	Plastic and Rubber Products Co, 2150 Parco Ave, Ontario, Calif. 91764
77482	Quality Tools Corp, Oldforge Rd, New Wilmington, Pa. 16142
77820	Bendix Corp, The, Electrical Components Division, Sherman Ave, Sidney, N. Y. 13838
77842	Sealol, Inc, P O Box 2158, Providence, R. I. 02905
78189	Illinois Tool Works, Inc, Shakeproof Division, St. Charles Rd, Elgin, Ill. 60126
78570	Titeflex Division of Atlas Corp, 603 Hendee St, Springfield, Mass. 01109
79136	Waldes Kohinoor, Inc, 47-16 Austel Pl, Long Island City, N. Y. 11101
79326	Wiggins, E. B., Inc, 5000 Triggs St, Los Angeles, Calif. 90022
79470	Weatherhead Co, The, 300 E 131st St, Cleveland, Ohio 44108

Figure 1-4. Manufacturers Codes (Sheet 3 of 4)

Code	Manufacturers Name and Address
80294	Bourns, Inc, 1200 Columbia Ave, Riverside, Calif. 92507
80657	Torrington Co, The Bantam Bearings Division, 3702 W Sample St, South Bend, Ind. 46621
80756	Ramsey Corp, Manchester - Weldman, St Louis, Mo. 63108
81376	Southwest Products Co, 1705 S Mountain Ave, Monrovia, Calif. 91016
81400	Haskel Engineering and Supply Co, 100 E Graham Pl, Burbank, Calif. 91502
81481	Avica-Flex Metal Bellows Corp, 20960 Knapp St, Chatsworth, Calif. 91311
81629	Halfco Division of U S Bearing Corp, 9750 De Soto Ave, Chatsworth, Calif. 90053
81873	Hydraulic Research and Mfg Co, Division of Textron, Inc, 25200 West Rye Canyon Road, Valencia, Calif. 91355
82647	Texas Instruments, Inc, Control Products Division, 34 Forest St, Attleboro, Mass. 02703
83259	Parker Seal Co, Division of Parker-Hannifin Corp, 10567 Jefferson Blvd, Culver City, Calif. 90231
83475	Potter Aeronautical Co, P O Box 1123, Union, N. J. 07083
84971	T. A. Mfg Corp, 4607 Alger St, Los Angeles, Calif. 90039
89193	United Aircraft Products, Inc, Los Angeles, Calif. 90053
91767	See Code 26344 (Formerly Helicoil Corp)
92003	Parker-Hannifin Corp, Aerospace Group, 5827 W Century Blvd, Los Angeles, Calif. 90009
92215	Vol-Shan Mfg Co, 8463 Higuera, Culver City, Calif. 90230
92473	Bozung, J. A., Co, 9401 Whitmore, Elmonte, Calif. 91731
92555	Lee Co, The 2 Pettipaug Rd, Westbrook, Conn. 06498
92764	Johns-Manville Products Corp, 601 Nassau St, New Brunswick, N. J. 08902
95272	Sargent Industries, Inc, Stillman Rubber Division, 5813 Marilyn Ave, Culver City, Calif. 90230
96142	Calumet and Hecla Corp, Flexonics Division, 300 E Devon Ave, Bartlett, Ill. 60301
97820	Shamban, W. S., and Co, 711 Mitchell Rd, Newbury Park, Calif. 91320
98441	Stratoflex, Inc, 220 Roberts Cut-Off, P O Box 10398, Fort Worth, Texas 76114
98625	Aeroquip Corp, Marman Division, 11214 Exposition Blvd, Los Angeles, Calif. 90064
99657	Marotta Scientific Controls, Inc, Boonton Ave, Boonton, N. J. 07005
99755	Flexible Metal Hose Mfg Co, 777 W 16th, Costa Mesa, Calif. 92627

Figure 1-4. Manufacturers Codes (Sheet 4 of 4)

Code	MD No.	Engine Serial Number	Superseding MD No.
GQ	7	F-2029 THRU F-2042	96
GU	7	F-2029 THRU F-2059	58
GV	7	F-2029 THRU F-2092	147
JC	9	F-2029 THRU Γ-2047	125
TH	18	F-2029 THRU F-2047	126
TJ	18	F-2029 THRU F-2089	145
AGE	31	F-2029 THRU F-2038	124
AHH	32	F-2029 THRU F-2047	126
AHK	32	F-2029 THRU F-2054	123
AHL	32	F-2029 THRU F-2072	137
AHM	32	F-2029 THRU F-2089	145
AHN	32	F-2029 THRU F-2078	140
AHP	32	F-2029 THRU F-2065	142
AJB	33	F-2029 THRU F-2050	131
AUB	43	F-2029 THRU F-2042	107
BKA	58	F-2045-1, F-2049, F-2060 THRU F-2098	-
BNB	61	F-202[illegible] THRU F-2089	137
CEA	77	F-2029 THRU F-2042	-
CQA	87	F-2029 THRU F-2036, F-2038, F-2040 THRU F-2098	-
CRB	88	F-2029 THRU F-2083	146
CZA	96	F-20[illegible]3 THRU F-2098	-
	97	F-2029 THRU F-2042	-
CZB	96	F-2043 THRU F-2047	122
	97	F-2029 THRU F-2042	-
CZE	96	F-2043 THRU F-2083	146
	97	F-2029 THRU F-2042	-
DCB	99	F-2036 THRU F-2042	96
DKB	106	F-2029 THRU F-2042	96
DLC	107	F-2029 THRU F-2078	140,189
DPB	110	F-2029 THRU F-2044, F-2046 THRU F-2048, F-2050 THRU F-2058, F-2061 THRU F-2065	128
EBB	122	F-2029 THRU F-2089	145
ECA	123	F-2055 THRU F-2098	184,185
ECB	123	F-2055 THRU F-2056	129
EDB	124	F-2029 THRU F-2047	130
EEA	125	F-2035, F-2036, F-2040 THRU F-2098	-
EFB	126	F-2029 THRU F-2036, F-2040 THRU F-2065	142
EHB	128	F-206[illegible] THRU F-2078	140
EJB	129	F-2057 THRU F-2072	-
EKB	130	F-2029 THRU F-2054	123
ELA	131	F-2045-1, F-2049, F-2051 THRU F-2098	-
EMA	132	F-2046, F-2048 THRU F-2098	-
EMB	132	F-2046, F-2048 THRU F-2072	150
EPB	134	F-2029 THRU F-2065	142
ESA	137	F-2045-1, F-2049, F-2066, F-2073 THRU F-2098	-
ESB	137	F-2045-1, F-2049, F-2066, F-2073 THRU F-2078	140
ETA	138	F-2029 THRU F-2036, F-2038, F-2040 THRU F-2098	-
EVA	140	F-2079 THRU F-2098	190

Figure 1-5. Usable on Codes (Sheet 1 of 2)

Code	MD No.	Engine Serial Number	Superseding MD No.
EVB	140	F-2079 THRU F-2087	170
EVC	140	F-2079 THRU F-2091	175
EXB	142	F-2066 THRU F-2069	152
FAA	145	F-2045-1, F-2090 THRU F-2098	-
FBA	146	F-2045-1, F-2049, F-2060, F-2066, F-2084 THRU F-2098	-
FCA	147	F-2045-1, F-2049, F-2091 THRU F-2098	-
FGB	151	F-2043 THRU F-2045, F-2047	-
FHB	152	F-2070 THRU F-2098	-
FRA	161	F-2092 THRU F-2098	-
FRB	--	F-2029 THRU F-2091	161
FTB	163	F-2029 THRU F-2048, F-2050 THRU F-2081	132
FTC	162	F-2082 THRU F-2090	147
GBB	170	F-2038, F-2043 THRU F-2092	147
GFB	174	F-2045, F-2059, and F-2060	182
GGA	175	F-2092 THRU F-2098	-
GJA	177	F-2093 THRU F-2098	-
GLB	179	F-2043 THRU F-2098	-
GPB	182	F-2045-1, F-2049	-
GRA	184	F-2060, F-2068, F-2069, F-2071, F-2073 THRU F-2077, F-2079 THRU F-2088, F-2092 THRU F-2094	-
GSA	185	F-2059	-
GTB	--	Engines not assigned to flight vehicles S-IC-11, S-IC-14, S-IC-15, and 2 spare engines (serial numbers TBD)	186,187
GTC	186	Engines assigned to	
GUA	187	flight vehicles S-IC-11, S-IC-14, S-IC-15, and 2 spare engines (serial numbers TBD)	-
GWB	189	F-2045, F-2049, F-2059, F-2060, F-2066, F-2067, F-2070, F-2072, F-2074 THRU F-2077	-
GXA	190	F-2079 THRU F-2098	-
VAB	--	F-2029 THRU F-2083	146

Figure 1-5. Usable on Codes (Sheet 2 of 2)

Parts Coded	Removal and Replacement Action
A	Assembled from component parts.
D	Removed and replaced at depot level (Rocketdyne).
F	Removed and replaced at field level (using sites).
M	May be manufactured at level designated by accompanying digit.
U	Information only, such as installation drawings, etc.
X	Will not be procured.
*	Removed and reinstalled.
1	Field level (using sites).
2	Depot (Rocketdyne).
3	Nonrepairable.

Figure 1-6. Repair Codes

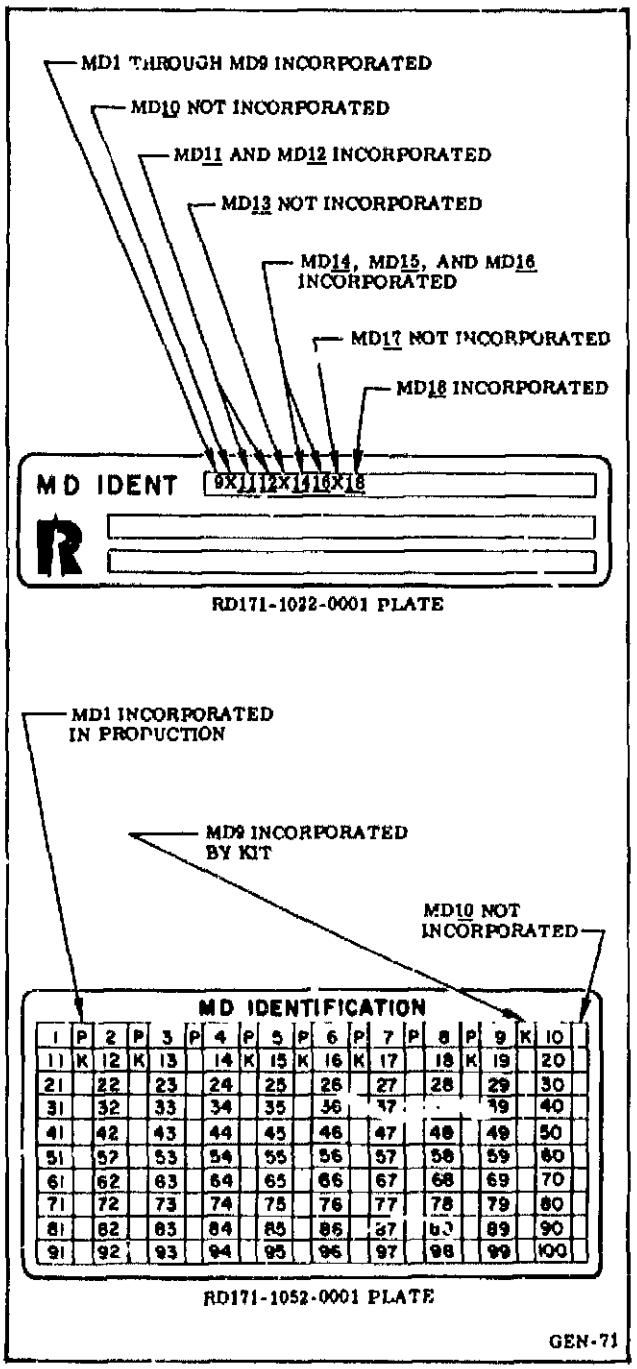

Figure 1-7. MD System

Approved ECP No.	MD No.	Incorporated in Manual Dated
F1-38	37	20 January 1965
F1-38R1	--	20 July 1965
F1-39	11	INCORP W/F1-269
F1-42	7	14 August 1964
F1-45	7	9 June 1964
F1-56	7	14 August 1964
F1-57	7	14 August 1964
F1-59	7	14 August 1964
F1-60	16	14 August 1964
F1-62	7	14 August 1964
F1-64	7	14 August 1964
F1-65	7	9 June 1964
F1-67	10	14 August 1964
F1-69	7	23 October 1964
F1-71	9	14 August 1964
F1-74	7	9 June 1964
F1-76	24	20 April 1965
F1-76R1	--	20 July 1965
F1-78	7	14 August 1964
F1-80	7	9 June 1964
F1-82	18	14 August 1964
F1-85	7	14 August 1964
F1-86	7	9 June 1964
F1-90	7	24 April 1964
F1-91	7	9 June 1964
F1-95	7	14 August 1964
F1-97	7	23 October 1964
F1-98	20	INCORP W/F1-197
F1-99	14	9 June 1964
F1-100	7	9 June 1964
F1-101	8	14 August 1964
F1-106	7	24 April 1964
F1-108	7	14 August 1964
F1-124	7	14 August 1964
F1-129	8	14 August 1964
F1-129R1	--	N/A
F1-131	7	14 August 1964
F1-132	7	14 August 1964
F1-135	7	14 August 1964
F1-143	11	INCORP W/F1-269
F1-143R1	--	N/A
F1-146	1	INCORP W/F1-99
F1-147	7	14 August 1964
F1-149	11	INCORP W/F1-269
F1-153	7	14 August 1964

Figure 1-8. Configuration Changes-- Manual Effectivity (Sheet 1 of 5)

Approved ECP No.	MD No.	Incorporated in Manual Dated
F1-154	7	9 June 1964
F1-165	12	N/A
F1-165R1	--	N/A
F1-166	13	N/A
F1-168	8	9 June 1964
F1-169	7	9 June 1964
F1-172	7	14 August 1964
F1-174	21	20 April 1965
F1-174R1	--	N/A
F1-176	22	20 July 1965
F1-180	34	14 August 1964
F1-182	7	14 August 1964
F1-185	32	20 January 1965
F1-185R1	--	19 November 1965
F1-188	7	14 August 1964
F1-188R1	--	N/A
F1-189	7	23 October 1964
F1-191	7	14 August 1964
F1-192	46	N/A
F1-192R1	--	20 July 1965
F1-192R2	--	26 January 1966
F1-193	7	14 August 1964
F1-193R1	--	N/A
F1-194	7	23 October 1964
F1-195	7	23 October 1964
F1-196	29	14 August 1964
F1-197	20	SUPSD by F1-267
F1-198	26	N/A
F1-198R1	--	20 April 1965
F1-202	7	14 August 1964
F1-206	22	20 April 1965
F1-206R1	--	N/A
F1-206R2	--	N/A
F1-208	33	23 October 1964
F1-214	31	20 April 1965
F1-214R1	--	19 November 1965
F1-215	116	N/A
F1-215R1	--	26 July 1966
F1-215R2	--	N/A
F1-216	31	20 April 1965
F1-216R1	--	N/A
F1-217	7	14 August 1964
F1-226	35	14 August 1964
F1-228	36	14 August 1964
F1-229	8	23 October 1964
F1-229R1	--	19 November 1965
F1-233	38	20 April 1965
F1-235	31	20 July 1965
F1-236	7	23 October 1964
F1-241	7	23 October 1964
F1-242	39	14 August 1964
F1-244	7	23 October 1964
F1-251	7	23 October 1965

Approved ECP No.	MD No.	Incorporated in Manual Dated
F1-253	43	20 January 1965
F1-254	7	23 October 1964
F1-255	42	23 October 1964
F1-258	22	23 October 1964
F1-258R1	--	N/A
F1-258R2	--	N/A
F1-260	54,155	20 April 1965
F1-260R1	--	26 January 1966
F1-260R2	--	1 September 1967
F1-261	22	20 January 1965
F1-262	50	20 January 1965
F1-263	51	20 January 1965
F1-267	49	20 July 1965
F1-268	59	INCORP W/F1-176
F1-268R1	--	INCORP W/F1-176
F1-269	55	20 January 1965
F1-270	47	N/A
F1-270R1	--	20 April 1965
F1-270R2	--	19 November 1965
F1-274	53	20 April 1965
F1-276	22	20 April 1965
F1-277	61	20 April 1965
F1-278	64	19 November 1965
F1-279	21	20 April 1965
F1-279R1	--	20 July 1965
F1-282	31	20 April 1965
F1-283	65	N/A
F1-283R1	--	19 November 1965
F1-283R2	--	26 January 1966
F1-285	68	N/A
F1-285R1	--	19 November 1965
F1-287	31	20 July 1965
F1-288	31	20 July 1965
F1-289	63	N/A
F1-289R1	--	N/A
F1-289R2	--	20 July 1965
F1-294	57	N/A
F1-294R1	--	20 July 1965
F1-294R2	--	19 November 1965
F1-303	54	20 July 1965
F1-303R1	--	19 November 1965
F1-304	67	20 July 1965
F1-304R1	--	1 September 1967
F1-305	73	20 July 1965
F1-305R1	--	19 November 1965
F1-306	66	N/A
F1-306R1	--	N/A
F1-306R2	--	20 July 1965
F1-307	74	19 November 1965
F1-307R1	--	N/A
F1-307R2	--	N/A
F1-308	71	20 July 1965
F1-309	77,80,95	19 November 1965
F1-310	78,80,95	19 November 1965

Figure 1-8. Configuration Changes--Manual Effectivity (Sheet 2 of 5)

Approved ECP No.	MD No.	Incorporated in Manual Dated
F1-311	31, 108	19 November 1965
F1-311R1	--	26 July 1966
F1-312	96, 97	19 November 1965
F1-312R1	--	26 January 1966
F1-312R2	--	26 July 1966
F1-312R3	--	26 July 1966
F1-312R4	179	20 June 1969
F1-313	69	20 July 1965
F1-313R1	--	19 November 1965
F1-314	31	20 July 1965
F1-315	70, 83	N/A
F1-315R1	--	N/A
F1-315R2	--	19 November 1965
F1-316	31	20 July 1965
F1-317	71	19 November 1965
F1-319	31	19 November 1965
F1-320	75	N/A
F1-320R1	--	19 November 1965
F1-321	31	20 July 1965
F1-323	84, 85, 86	N/A
F1-323R1	--	N/A
F1-323R2	--	26 July 1966
F1-323R3	--	N/A
F1-324	72	N/A
F1-324R1	--	19 November 1965
F1-326	79, 80, 95	19 November 1965
F1-328	76	N/A
F1-328R1	--	26 January 1966
F1-331	31	20 July 1965
F1-332	31	20 July 1965
F1-333	54	20 July 1965
F1-335	31	19 November 1965
F1-342	30	N/A
F1-343	90, 91	19 November 1965
F1-347	31	19 November 1965
F1-352	31	26 January 1966
F1-352R1	--	26 July 1966
F1-353	82	19 November 1965
F1-356	88, 93	19 November 1965
F1-357	89	19 November 1965
F1-358	31	19 November 1965
F1-360	99	26 January 1966
F1-361	92	19 November 1965
F1-362	54	19 November 1965
F1-369	94	19 November 1965
F1-370	106	N/A
F1-370R1	--	N/A
F1-370R2	--	26 July 1966
F1-370R3	--	5 July 1967
F1-370R4	--	N/A
F1-371	31	19 November 1965
F1-372	100	19 November 1965
F1-372R1	--	N/A
F1-372R2	--	26 January 1966
F1-373	--	N/A
F1-378	58	N/A
F1-378R1	--	N/A
F1-378R2	--	26 January 1966
F1-378R3	--	9 February 1967
F1-379	101	N/A
F1-379R1	--	26 January 1966
F1-379R2	--	26 July 1966
F1-380	99	26 January 1966
F1-381	31	26 January 1966
F1-391	102, 103, 166	9 August 1968
F1-391R1	--	14 February 1969
F1-392	137	N/A
F1-392R1	--	N/A
F1-392R2	--	5 July 1967
F1-405	128	N/A
F1-405R1	--	N/A
F1-405R2	--	9 February 1967
F1-406	--	N/A
F1-407	109	N/A
F1-407R1	--	26 July 1966
F1-408	104	N/A
F1-408R1	--	26 July 1966
F1-409	105	26 July 1966
F1-410	128, 182	N/A
F1-410R1	--	31 July 1970
F1-415	107	26 July 1966
F1-416	120	26 July 1966
F1-416R1	--	N/A
F1-417	--	N/A
F1-418	--	N/A
F1-418R1	--	N/A
F1-419	--	N/A
F1-419R1	--	N/A
F1-420	--	N/A
F1-420R1	--	N/A
F1-421	--	N/A
F1-421R1	--	N/A
F1-421R2	--	N/A
F1-422	113, 114	26 July 1966
F1-422R1	--	9 February 1967
F1-423	119	26 July 1966
F1-423R1	--	N/A
F1-424	110	N/A
F1-424R1	--	26 July 1966
F1-426	117	26 July 1966
F1-426R1	--	N/A
F1-427	111	N/A
F1-427R1	--	N/A
F1-427R2	--	N/A
F1-428	87	N/A
F1-428R1	--	9 February 1967

Figure 1-8. Configuration Changes--Manual Effectivity (Sheet 3 of 5)

Approved ECP No.	MD No.	Incorporated in Manual Dated
F1-430	112	26 July 1966
F1-431	137	N/A
F1-431R1	--	N/A
F1-431R2	--	5 July 1967
F1-432	125	N/A
F1-432R1	--	N/A
F1-432R2	--	9 February 1967
F1-434	121	26 July 1966
F1-434R1	--	N/A
F1-436	123	9 February 1967
F1-437	115	N/A
F1-437R1	--	N/A
F1-437R2	--	9 February 1967
F1-437R3	--	9 August 1968
F1-438	131	9 February 1967
F1-439	146	N/A
F1-439R1	--	1 September 1967
F1-441	140	N/A
F1-441R1	--	N/A
F1-441R2	--	5 July 1967
F1-441R3	--	N/A
F1-443	129	9 February 1967
F1-444	139	N/A
F1-444R1	--	N/A
F1-444R2	--	5 July 1967
F1-445	122	N/A
F1-445R1	--	9 February 1967
F1-447	138	N/A
F1-447R1	--	N/A
F1-447R2	--	5 July 1967
F1-448	149	N/A
F1-448R1	--	5 July 1967
F1-448R2	--	N/A
F1-449	127	N/A
F1-449R1	--	9 February 1967
F1-452	126	N/A
F1-452R1	--	9 February 1967
F1-453	123	9 February 1967
F1-454	118	N/A
F1-454R1	--	9 February 1967
F1-454R2	--	5 July 1967
F1-456	124	N/A
F1-456R1	--	9 February 1967
F1-457	136	5 July 1967
F1-459	130	9 February 1967
F1-464	--	N/A
F1-467	--	N/A
F1-467R1	--	N/A
F1-468	128	9 February 1967
F1-470	140	5 July 1967
F1-470R1	--	N/A
F1-470R2	--	N/A
F1-475	--	N/A
F1-475R1	--	N/A
F1-475R2	--	N/A
F1-476	135	N/A
F1-476R1	--	9 February 1967
F1-478	137	N/A
F1-478R1	--	N/A
F1-478R2	--	5 July 1967
F1-480	132	9 February 1967
F1-480R1	--	N/A
F1-482	133, 134, 142	9 February 1967
F1-482R1	--	5 July 1967
F1-495	144	N/A
F1-495R1	--	5 July 1967
F1-498	145	5 July 1967
F1-498R1	--	N/A
F1-498R2	--	N/A
F1-499	137	N/A
F1-499R1	--	1 September 1967
F1-500	150, 151	N/A
F1-500R1	--	1 September 1967
F1-502	148	5 July 1967
F1-504	141	N/A
F1-504R1	--	1 September 1967
F1-505	161	12 December 1967
F1-505R1	--	N/A
F1-505R2	--	N/A
F1-506	159	12 December 1967
F1-507	--	N/A
F1-509	143	5 July 1967
F1-510	152	12 December 1967
F1-510R1	--	N/A
F1-511	146	5 July 1967
F1-511R1	--	N/A
F1-512R1	177	14 February 1969
F1-515	147	N/A
F1-515R1	--	3 May 1968
F1-521	154, 163	N/A
F1-521R1	--	N/A
F1-521R2	--	3 May 1968
F1-521R3	--	9 August 1968
F1-521R4	--	N/A
F1-522	--	N/A
F1-523	--	N/A
F1-524	153	1 September 1967
F1-525	157, 158	12 December 1967
F1-525R1	--	N/A
F1-526	156	12 December 1967
F1-526R1	--	N/A

Figure 1-8. Configuration Changes--Manual Effectivity (Sheet 4 of 5)

Approved ECP No.	MD No.	Incorporated in Manual Dated
F1-530	162,163	12 December 1967
F1-530R2	--	N/A
F1-530R3	--	3 May 1968
F1-535	--	N/A
F1-543	165	N/A
F1-543R1	--	3 May 1968
F1-545	154	3 May 1968
F1-546	--	N/A
F1-547	169	9 August 1968
F1-548	160	12 December 1967
F1-548R1	--	9 August 1968
F1-552	170	9 August 1968
F1-552R1	--	N/A
F1-552R2	--	9 August 1968
F1-568	--	N/A
F1-570	--	N/A
F1-574	--	N/A
F1-578	--	N/A
F1-578R1	--	N/A
F1-579	--	N/A
F1-580	--	N/A
F1-581	167,168	3 May 1968
F1-581R1	--	N/A
F1-581R2	--	N/A
F1-581R3	--	N/A
F1-581R4	--	9 August 1968
F1-587	--	N/A
F1-590	176	14 February 1969
F1-590R1	--	23 January 1970
F1-590R2	--	N/A
F1-590R3	--	N/A
F1-590R4	--	N/A
F1-591	172	14 February 1969
F1-592	173	14 February 1969
F1-596R1	174	23 January 1970
F1-597	175	14 February 1969
F1-602	178	23 January 1970
F1-604	180	23 January 1970
F1-607	181	N/A
F1-607R1	--	N/A
F1-607R2	--	N/A
F1-607R3	--	N/A
F1-612	184	N/A
F1-612R1	185	N/A
F1-613	186,187	31 July 1970
F1-618	189,190	28 April 1972

Figure 1-8 Configuration Changes--Manual Effectivity (Sheet 5 of 5)

SECTION II

GROUP ASSEMBLY PARTS LIST

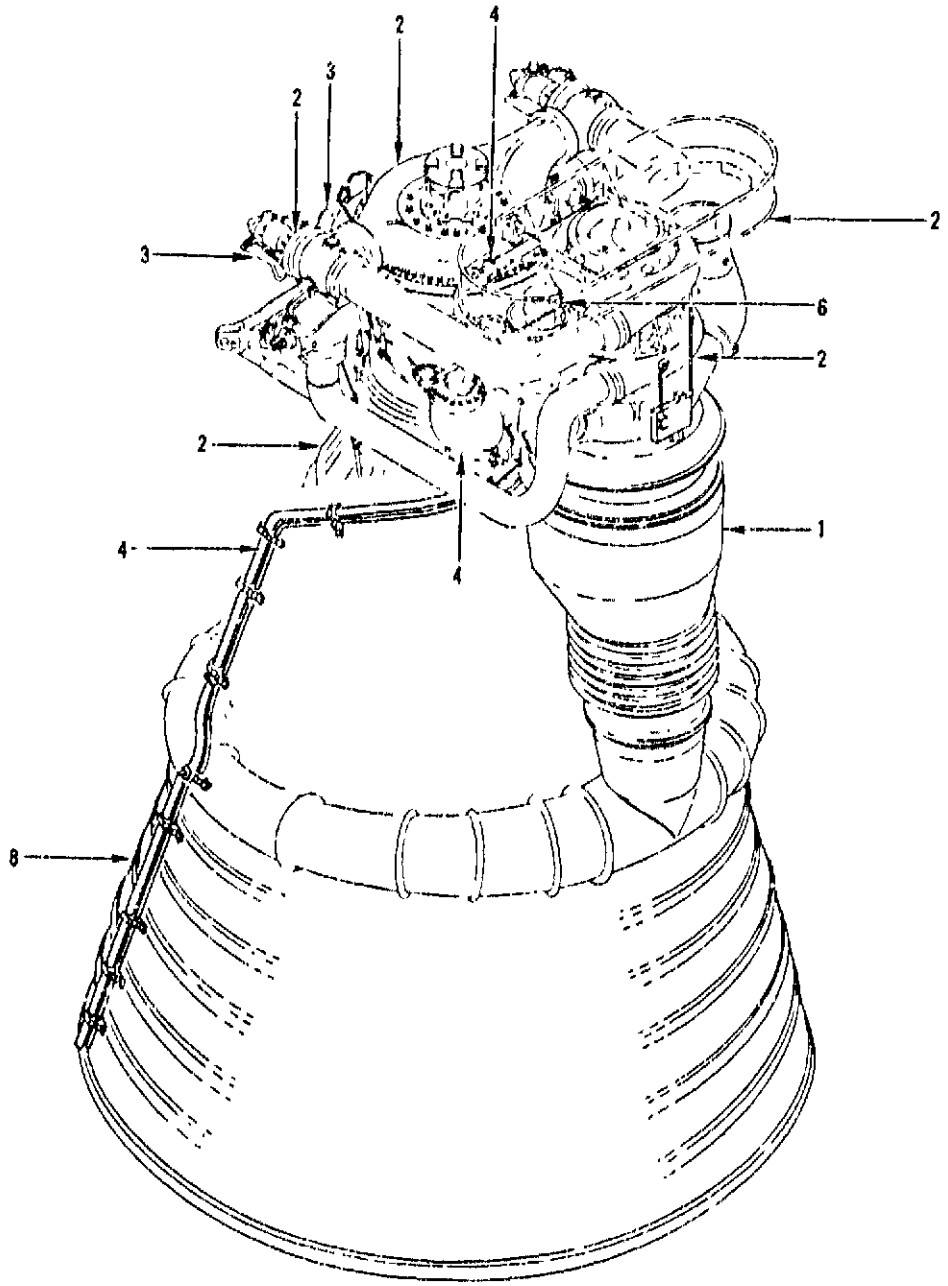

Figure 1. Rocket Engine Assembly (Sheet 1 of 2)

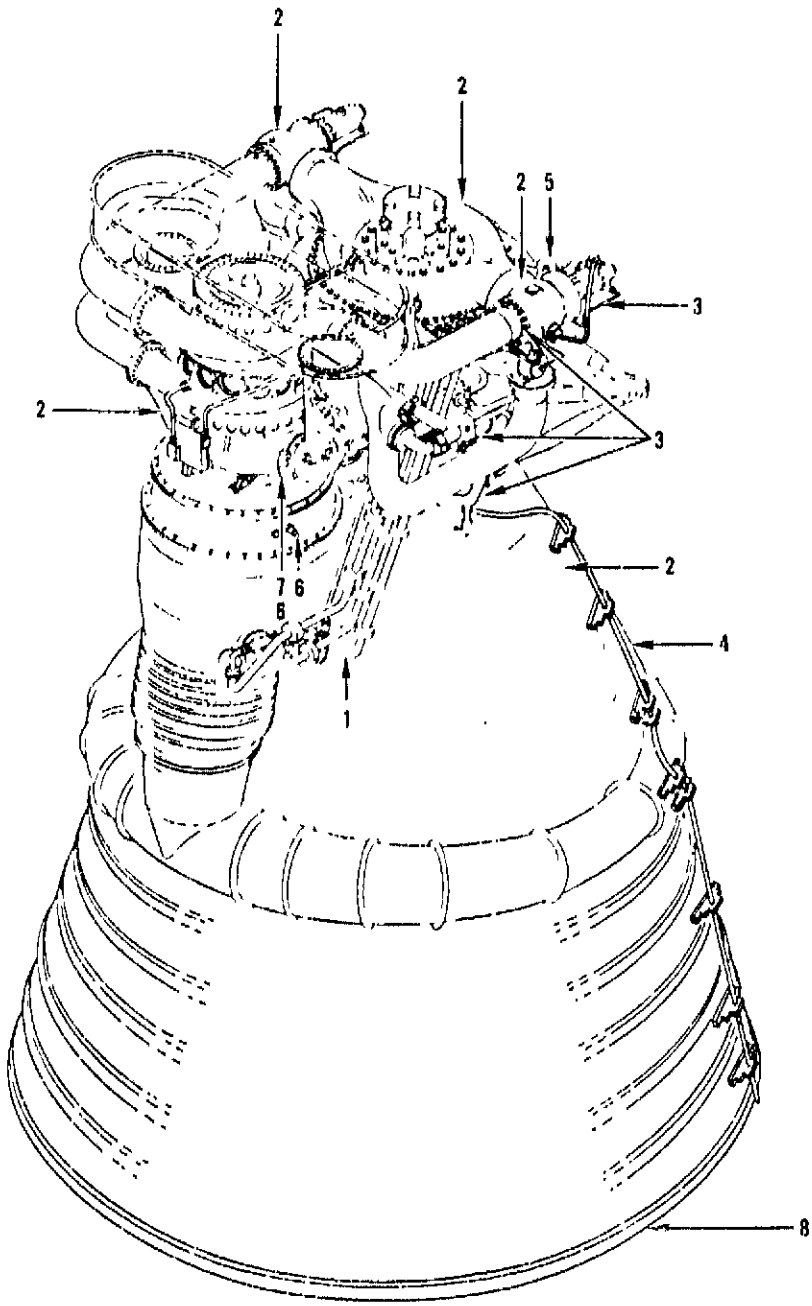

Figure 1. Rocket Engine Assembly (Sheet 2 of 2)

FIG & INDEX NO	ZONE NO	PART NUMBER	DESCRIPTION 1 2 3 4 5 6 7	UNITS PER ASSY	USABLE ON CODE
1-		104001	ENGINE ASSY, Rocket, F-1	1	
- 1	2,5	308211	. PRESSURIZATION SYSTEM INSTL (See figure 2 for breakdown)	1	
- 2	1,2,5,6	107001	. PROPELLANT FEED SYSTEM INSTL (See figures 5 and 6 for breakdown)	1	
- 3	1,3	601601	. HYDRAULIC CONTROL SYSTEM INSTL (See figure 20 for breakdown)	1	
- 4	1,6	308201	. GAS GENERATOR SYSTEM INSTL (See figure 27 for breakdown)	1	
- 5	6	502001	. ELECTRICAL SYSTEM INSTL (See figure 31 for breakdown)	1	
- 6	2,5	702561	. FLIGHT INSTRUMENTATION INSTL (Engines F-2029 THRU F-2012) (See figure 33 for breakdown)	1	
- 6	2,5	702561	. FLIGHT INSTRUMENTATION INSTL (Engines F-2043 THRU F-2098) (See figure 34 for breakdown)	1	
- 7	5	S1703101	. STATIC FIRING INSTRUMENTATION INSTL (Engines F-2029 THRU F-2012) (See figures 36 and 37 for breakdown)	1	
- 7	5	S1703101	. STATIC FIRING INSTRUMENTATION INSTL (Engines F-2043 THRU F-2098) (See figure 38 for breakdown)	1	
- 8	1,7	651578	. LOOSE EQUIPMENT INSTL (See figure 39 for breakdown)	1	
		101026	. MARKING, Identification	1	
		RD171-1025-0001	. . PLATE	1	
		RD171-1022-0001	. . PLATE (Replaced by RD171-1052-0001, RD171-1052-0002, and RD171-1052-0003, for spares)	1	
		RD171-1052-0001	. . PLATE, Identification	1	
		RD171-1052-0002	. . PLATE, Identification	1	
		RD171-1052-0003	. . PLATE, Identification	1	
		RK395-00021	ENGINE CLOSURES (See figures 40, 41, and 42 for breakdown)	1	
		RK395-00024	COMPONENT CLOSURES (See figures 43 THRU 61 for breakdown)	1	
		RK395-00021	ALTERNATE CLOSURE INSTALLATION (See figure 61 for breakdown)	1	
		No Number	COUPLING NUT GASKETS AND CLOSURES FOR PLUGS AND RECEPTACLES (See figure 62)	NP	

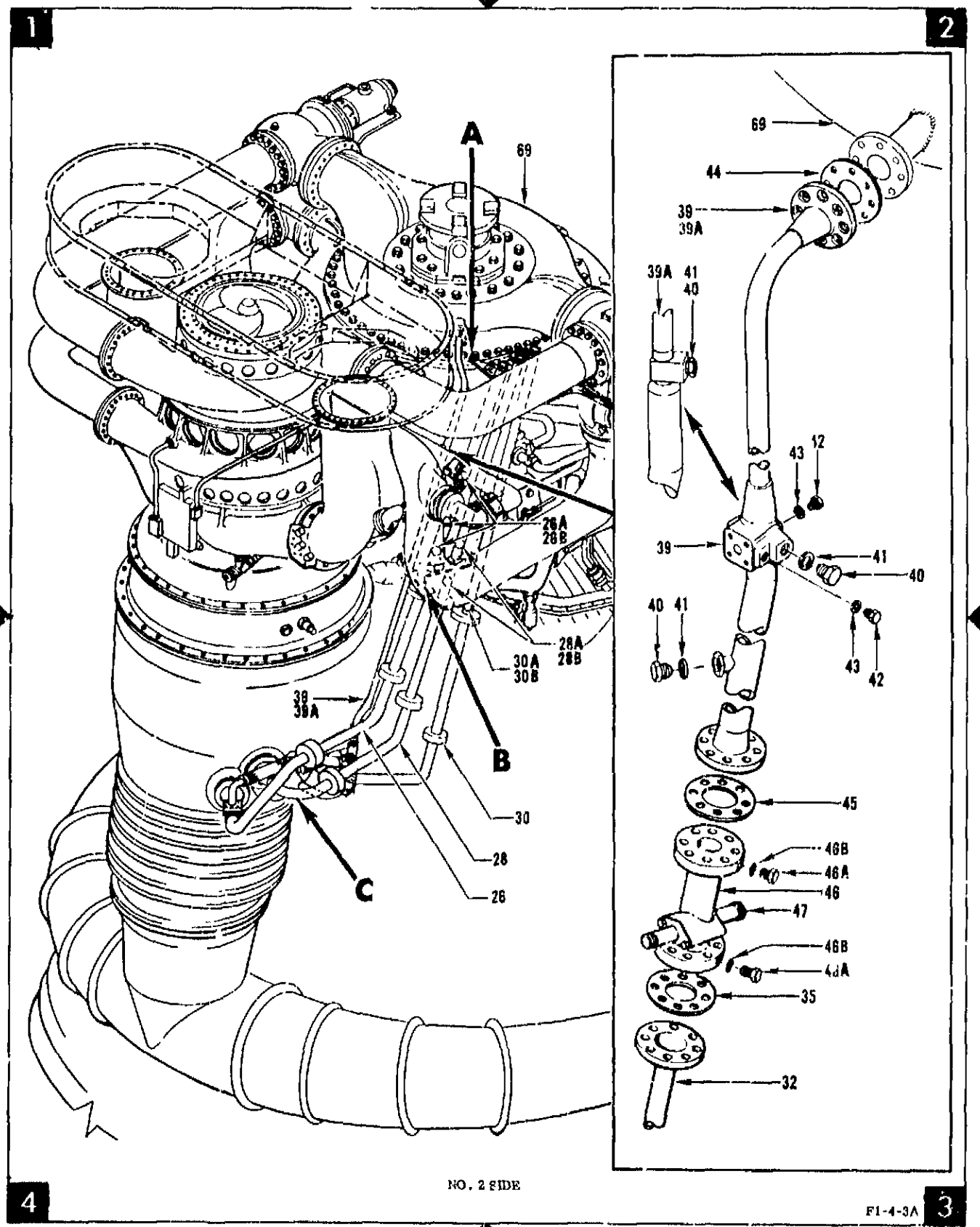

Figure 2. Pressurization System Installation—No. 2 Side (Sheet 1 of 2)

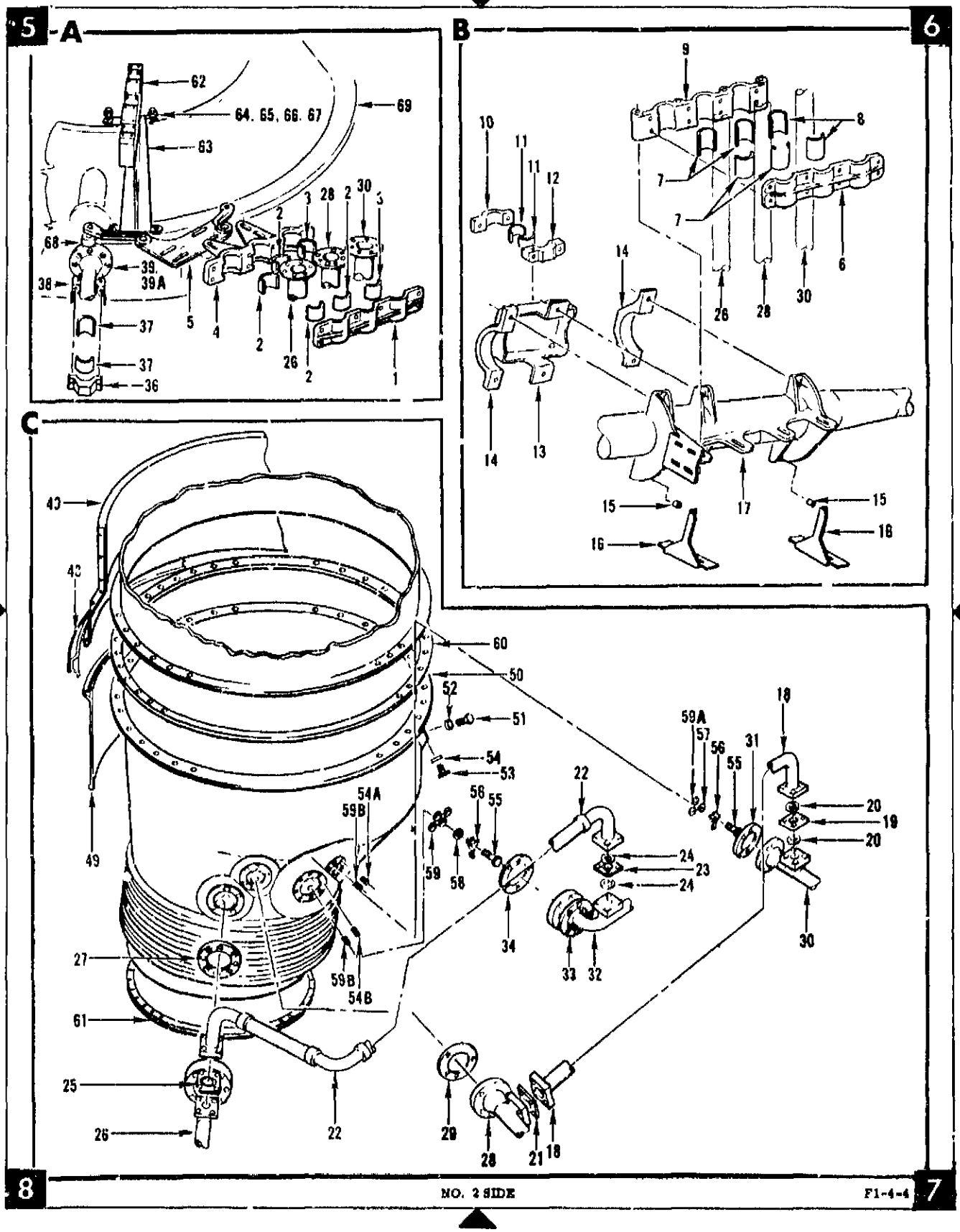

Figure 2. Pressurization System Installation—No. 2 Side (Sheet 2 of 2)

FIG & INDEX NO	ZONE NO	PART NUMBER	DESCRIPTION 1 2 3 4 5 6 7	UNITS PER ASSY	USABLE ON CODE
2-		308211	PRESSURIZATION SYSTEM INSTL (See figure 1, index 1, for REQMT)	REF	
- 1	5	308658	. COVER, Bracket, heat exchanger ducts	1	
		RD111-4010-0416	. BOLT (AP)	8	
		RD153-5002-0004	. WASHER (AP)	8	
- 2	5	K2207-18	. LINER (MFD by 51116)	4	
- 3	5	K2207-16	. LINER (MFD by 51116)	2	
- 4	5	308659	. BRACKET, Dome, heat exchanger ducts	1	
		RD111-4010-6417	. BOLT (AP)	4	
		RD153-5002-0004	. WASHER (AP)	8	
		MS15795-311	. WASHER (AP)	8	
		RD114-8003-1004	. NUT (AP)	4	
- 5	5	308656	. SUPPORT, Dome, heat exchanger	1	
		RD111-4010-0611	. BOLT (AP)	2	
		RD153-5002-0006	. WASHER (AP)	2	
		RD111-1010-6536	. BOLT (AP)	2	
		LD153-0013-0003	. WASHER (AP)	2	
		308663	. WASHER, Support customer connect, duct (AP)	4	
		308654	. BUSHING, Support customer connect, duct	2	
		MS9201-07	. NUT (AP)	2	
		RD114-8003-1005	. NUT (AP)	2	
- 6	6	308658	. COVER, Bracket, heat exchanger ducts	1	
		RD111-4011-6421	. BOLT (AP)	8	
		RD153-5002-0004	. WASHER (AP)	8	
		RD153-1002-0004	. WASHER (AP)	8	
		RD114-8005-1004	. NUT (AP)	8	
- 7	6	K2207-18	. LINER (MFD by 51116)	4	
- 8	6	K2207-16	. LINER (MFD by 51116)	2	
- 9	6	308657	. BRACKET, Heat exchanger ducts, pressurization system	1	
		RD111-4006-0442	. BOLT (AP)	4	
		RD153-5002-0004	. WASHER (AP)	4	
		RD153-1002-0004	. WASHER (AP)	4	
		RD114-8005-1004	. NUT (AP)	4	
-10	6	308242	. COVER, Block, strut, pressurization system	1	
		RD111-4010-6415	. BOLT (AP)	2	
		LD153-0013-0002	. WASHER (AP)	2	
-11	6	K2207-14	. LINER (MFD by 51116)	2	
-12	6	308241	. BLOCK ASSY Strut, pressurization system (Welded)	1	
		RD111-4009-0420	. BOLT (AP)	2	
		LD153-0013-0002	. WASHER (AP)	2	
		LD153-0010-0010	. WASHER (AP)	2	
		RD114-8003-1004	. NUT (AP)	2	
-13	6	308665	. BRACKET ASSY, Lower strut, pressurization system (Welded)	1	
		RD111-4010-0519	. BOLT (AP)	2	
		LD153-0013-0003	. WASHER (AP)	2	
		LD153-0010-0012	. WASHER (AP)	2	
		RD114-8003-1005	. NUT (AP)	2	
-14	6	308228	. STRAP, Strut bracket, pressurization system	2	
		RD111-4010-6521	. BOLT (AP)	2	
		RD111-4010-6526	. BOLT (AP)	2	
		RD153-5002-0005	. WASHER (AP)	2	
		RD153-1002-0005	. WASHER (AP)	2	
		RD114-8005-1005	. NUT (AP)	2	
-15	6	703024	. SPACER, 5/16 bolt	2	
-16	6	703010	. BRACKET ASSY, Tee, harness support (Welded)	2	
-17	6	308655	. SUPPORT, Strut, turbopump heat exchanger	1	
-18	7	NA5-26753	. HOSE ASSY, Helium bypass, heat exchanger (Helium bypass hose) (LC)	1	
		RD111-4010-0417	. BOLT (Intfc-heat exchanger end helium supply duct) (AP)	4	
		RD111-4015-2411	. BOLT (Intfc-heat exchanger end helium return duct) (AP)	4	
		RD153-5002-0004	. WASHER (AP)	8	
		RD172-0007-0001	. . TAPE (COMPRESSED GAS)	AR	
		RD172-0018-0400	. . TAPE (400 PSI)	AR	
		RD172-0014-0018	. . TAPE (HELIUM)	AR	
		RD172-0014-0039	. . TAPE (FLOW)	AR	
-19	7	RD251-4104-XXXX	. ORIFICE PLATE (Orifice size determined by calibration tests) (LC)	1	
-20	7	RD261-3010-0018	. SEAL (LC)	2	
-21	7	406770	SEAL, Pressure-actuated, hot gas (LC)	1	AJB
-21	7	460880	. SEAL, Pressure-actuatrd, cryogenic (LC)	1	ELA
-22	7,8	NA5-260102	. HOSE ASSY, Heat exchanger, LOX bypass (Oxidizer bypass hose) (LC)	1	BNB
-22	7,8	NA5-260102	. HOSE ASSY, Heat exchanger, LOX bypass (Oxidizer bypass hose) (LC)	1	ESA

FIG. & INDEX NO	ZONE NO.	PART NUMBER	DESCRIPTION 1 2 3 4 5 6 7	UNITS PER ASSY	USABLE ON CODE
2-		RD111-4010-0417	. BOLT (Intfc-heat exchanger end LOX supply hose) (AP)	4	
		RD111-4015-3412	. BOLT (Intfc-heat exchanger end GOX return duct) (AP)	4	
		RD153-5002-0004	. WASHER (AP)	8	
		RD172-0007-0001	. . TAPE (COMPRESSED GAS)	AR	
		RD172-0018-1750	. . TAPE (1750 PSI)	AR	
		RD172-0014-0039	. . TAPE (FLOW)	AR	
		RD172-0001-0001	. . TAPE (ROCKET OXIDIZER)	AR	
-23	7	RD251-4103-XXXX	. ORIFICE PLATE (Orifice size determined by calibration tests) (LC)	1	
-24	7	RD261-3010-0018	. SEAL (LC)	2	
-25	8	408770	. SEAL, Pressure-actuated, hot gas (LC)	1	AJB
-25	8	460880	. SEAL, Pressure-actuated, cryogenic (LC)	1	ELA
-26	3,5,6,8	406069	. DUCT ASSY, GOX return, heat exchanger end (GOX duct (Heat exchanger end)) (LC)	1	DLC
-26	3,5,6,8	406069-21	. DUCT ASSY, GOX return, heat exchanger end (GOX duct (Heat exchanger end)) (LC)	1	GWB
-26	3,5,6,8	406069-11	. DUCT ASSY, GOX return, heat exchanger end (GOX duct (Heat exchanger end)) (LC)	1	EVA
-26	3,5,6,8	406069-31	. DUCT ASSY, GOX return, heat exchanger end (GOX duct (Heat exchanger end)) (LC)	1	GXA
		RD111-4008-0622	. BOLT (AP)	8	
		RD153-5002-0006	. WASHER (AP)	8	
		RD172-0007-0001	. . TAPE (COMPRESSED GAS)	AR	
		RD172-0001-0001	. . TAPE (ROCKET OXIDIZER)	AR	
		RD172-0018-2000	. . TAPE (2000 PSI)	AR	
		RD172-0014-0039	. . TAPE (FLOW)	AR	
-26A	2	AN814-4JL	. . PLUG AND BLEEDER (Supersedes AN814-4CL) (HO3, HO4C, HO5) (Used on engines not incorporating MD189 change) (LC)	3	
-26A	2	AN814-4JL	. . PLUG AND BLEEDER (Supersedes AN814CL) (HO3, HO4C) (Used on engines not incorporating MD190 change) (LC)	2	
-26A	2	RD265-3017-0004	. . PLUG AND BLEEDER (HO3, HO4C, HO5) (Used on engines incorporating MD189 change) (LC)	3	
-26A		RD265-3017-0004	. . PLUG AND BLEEDER (HO3, HO4C) (Used on engines incorporating MD190 change) (LC)	2	
-26B	2	12100CR4	. . SEAL (MFD by 08199) (Used on engines not incorporating MD189 change) (LC)	3	
-26B	2	12100CR4	. . SEAL (MFD by 08199) (Used on engines not incorporating MD190 change) (LC)	2	
-26B	2	RE261-3005-1004	. . SEAL (Used on engines incorporating MD189 change) (LC)	3	
-26B	2	RE261-3005-1004	. . SEAL (Used on engines incorporating MD190 change) (LC)	2	
-27	8	306261-5	. SEAL, Pressure-actuated, hot gas (LC)	1	
-28	5, 6, 7	406640	. DUCT ASSY, Helium return, heat exchanger end (LC)	1	DKB
-28	5, 6, 7	406067	. DUCT ASSY, Helium return, heat exchanger end (LC)	1	CZA
		RD111-4008-0516	. BOLT (AP)	8	
		RD153-5002-0005	. WASHER (AP)	8	
		RD172-0014-0018	. . TAPE (HELIUM)	AR	
		RD172-0001-0001	. . TAPE (ROCKET OXIDIZER)	AR	
		RD172-0018-0400	. . TAPE (400 PSI)	AR	
		RD172-0014-0039	. . TAPE (FLOW)	AR	
-28A	3	AN814-4JL	. . PLUG AND BLEEDER (Supersedes AN814-4CL)(Taps HH3c, HH4)(LC)	2	
-28B	3	12100CR4	. . SEAL (MFD by 08199) (LC)	2	
-29	9	306261-3	. SEAL, Pressure-actuated, hot gas (LC)	1	
-30	3,5,6,7	406629-11	. DUCT ASSY, Helium supply, heat exchanger end (LC)	1	AUB
		406641	. . DUCT ASSY, Helium supply, heat exchanger end (Field configuration for 406629-11 incorporating MD107 change) (LC)	NP	
-30	3,5,6,7	406068	. DUCT ASSY, Helium supply, heat exchanger end (Used on engines F-2043 THRU F-2098) (LC)	1	
		RD111 4008-0516	. BOLT (AP)	8	
		RD153-5002-0005	. WASHER (AP)	8	
		RD172-0007-0001	. . TAPE (COMPRESSED GAS)	AR	
		RD172-0014-0018	. . TAPE (HELIUM)	AR	
		RD172-0018-0400	. . TAPE (400 PSI)	AR	
		RD172-0014-0039	. . TAPE (FLOW)	AR	
-30A	3	AN814-4JL	. . PLUG AND BLEEDER (Supersedes AN814-4CL)(Tap HH2c)(LC)	1	
-30B	3	RE261-3004-0004	. . SEAL (Interchangeable with 12100CR4 MFD by 08199) (LC)	1	JC
-31	7	306261-3	. SEAL, Pressure-actuated, hot gas (LC)	1	EEA
-32	3,7	NA5-20757	. HOSE ASSY, LOX supply, heat exchanger end (Oxidizer supply hose) (LC)	1	
-32	3,7	NA5 300159	. HOSE ASSY, LOX supply, heat exchanger end (Oxidizer supply hose) (LC)	1	
		RD111-4009-0518	. BOLT (Intfc-oxidizer flowmeter) (AP)	8	
		RD111-4008-0621	. BOLT (Intfc-heat exchanger end LOX supply hose) (AP)	8	
		LD153-0013-0003	. WASHER (Intfc-oxidizer flowmeter) (AP)	8	
		LD153-0010-0013	. WASHER (Intfc-oxidizer flowmeter) (AP)	8	
		RD153-5002-0006	. WASHER (Intfc-heat exchanger end LOX supply hose) (AP)	8	
		RD114-8003-1005	. NUT (Intfc-oxidizer flowmeter) (AP)	8	
		RD172-0014-0027	. . TAPE (LIQUID OXYGEN)	AR	
		RD172-0014-0039	. . TAPE (FLOW)	AR	
		RD172-0018-1750	. . TAPE (1750 PSI)	AR	
-33	7	407884	. RING, Flange, LOX inlet line	1	
-34	7	404673-27	. SEAL, Pressure-actuated, cryogenic (LC)	1	
-35	3	404657-65	. SEAL, Pressure-actuated (LC)	1	
-36	5	308244	. COVER, Block, LOX line, pressurization system	1	
		RD111-1008-3417	. BOLT (AP)	2	
		RD153-5004-0004	. WASHER (AP)	2	

FIG & INDEX NO	ZONE NO	PART NUMBER	DESCRIPTION 1 2 3 4 5 6 7	UNITS PER ASSY	USABLE ON CODE
2-37	5	K22C[illegible]-14	. LINER (MFD by 51116)	2	
-38	5	308243	. BLOCK ASSY, LOX line, pressurization system	1	
		RD111-1010-6427	. BOLT (AP)	2	
		LD153-0013-0002	. WASHER (AP)	2	
		LD153-0010-0010	. WASHER (AP)	2	
		RD114-8003-1004	. NUT (AP)	2	
-39	2,4	407840	. VALVE ASSY, Check, heat exchanger (Welded) (LC)	1	GQ
-39A	2,4	407870	. VALVE ASSY, Check, heat exchanger (Welded) (LC)	1	CZA
			PARTIAL BREAKDOWN FOLLOWS		
		RD111-4009-0522	. BOLT (Intfc-injector thrust chamber dome) (AP)	8	
		RD111-4009-0524	. BOLT (Intfc-oxidizer flowmeter) (AP)	8	
		LD153-0013-0003	. WASHER (AP)	16	
		LD153-0010-0012	. WASHER (AP)	16	
		RD114-8003-1005	. NUT (AP)	16	
		407871	. . BODY ASSY, Check valve, heat exchanger (LC)	1	GQ
		407871	. . BODY ASSY, Check valve, heat exchanger (LC)	1	CZA
-40	2	RD265-3004-2002	. . . PLUG (Tap HOlc, HO2) (LC)	2	GQ
-40	2	RD265-3004-0002	. . . PLUG (LC)	2	CZA
-41	2	RE261-3004-0004	. . . SEAL (Interchangeable with 12100CR4 MFD by 08199) (LC)	2	
-42	2,3	AN814-2JL	. . . PLUG AND BLEEDER (Supersedes AN814-2CL) (LC)	2	GQ
-43	2,3	RE261-3004-0002	. . . SEAL (Interchangeable with 12100CR2 MFD by 08199) (LC)	2	GQ
		RD172-0001-0001	. . . TAPE (ROCKET OXIDIZER)	AR	
		RD172-0014-0027	. . . TAPE (LIQUID OXYGEN)	AR	
		RD172-0018-1500	. . . TAPE (1500 PSI)	AR	
		RD172-0014-0039	. . . TAPE (FLOW)	AR	
-44	2	404657-55	. SEAL, Pressure-actuated (LC)	1	
-45	3	404657-67	. SEAL, Pressure-actuated (LC)	1	
-46	3	NA5-27209T2	. TRANSDUCER, Liquid oxygen, volumetric liquid flow (Heat exchanger oxidizer flowmeter) (Tap F16) (J132) (LC)	1	
-46A	3	MS9015-02	. PLUG AND BLEEDER (LC)	2	
-46B	3	RE261-3004-0002	. SEAL (Interchangeable with 12100CR2 MFD by 08199) (LC)	2	
-47	3	RD265-6002-3004	. CAP (LC)	1	
-48	5	4451C4490M	. COUPLING (MFD by 98625)	1	
-49	5,8	303125-11	. SHIELD ASSY, Antiflrex (Turbine water shield)	1	
-50	7	308551-11	. HEAT EXCHANGER ASSY (Welded) (LC)	1	
			PARTIAL BREAKDOWN FOLLOWS		
		RD111-4003-0424	. BOLT (AP) (Intfc-thrust chamber)	60	
		RD111-4003-0424	. BOLT (AP) (Intfc-turbopump turbine)	120	
		LD153-0013-0002	. WASHER (AP)	180	
		LD153-0010-0010	. WASHER (AP)	180	
		H19083-4	. NUT (MFD by 96142)	180	
-51	7	AN814-4JL	. . PLUG AND BLEEDER (Supersedes AN814-4CL)(Taps TG5a, TG5b)(LC)	2	
-52	8	RE261-3004-1004	. . SEAL (Interchangeable with 12100AA4 MFD by 08199) (LC)	2	
-53	7	AN814-2JL	. . PLUG AND BLEEDER (Supersedes AN814-2CL) (LC)	6	
-54	7	RE261-3004-1002	. . SEAL (Interchangeable with 12100AA2 MFD by 08199) (LC)	6	
-54A	8	KNH524TSP	. . INSERT (MFD by 29372) (LC)	8	
-54B	8	KNH624TSP	. . INSERT (MFD by 29372) (LC)	8	
-55	7	AN104708	. . BOLT (LC)	2	
-56	7,8	308505	. . WASHER, Tab lock (LC)	2	
-57	7	308503	. . WASHER, Offset (LC)	1	
-58	8	308504	. . WASHER, Flat (LC)	1	
-59	7,8	RD251-4118-XXXX	. . ORIFICE PLATE (Orifice size determined by calibration tests) (LC)	4	
-59A	7	RD251-4118-XXXX	. . ORIFICE PLATE (Orifice size determined by calibration tests) (LC)	2	
-59B	8	J501-4CNVX375	. . INSERT (MFD by 91767) (LC)	2	
-60	7	408792	. SEAL, Pressure-actuated, hot gas (LC)	1	
-61	8	408786	. SEAL, Pressure-actuated, hot gas (LC)	1	
-62	5	308653	. BRACKET, Duct, customer connect, heat exchanger	1	
		RD111-4010-0611	. BOLT (AP)	1	
		RD111-4010-0610	. BOLT (AP)	1	
		RD111-4010-0421	. BOLT (AP)	4	
		RD153-5002-0006	. WASHER (AP)	2	
		RD153-5002-0004	. WASHER (AP)	6	
		MS15795-311	. WASHER (AP)	8	
		RD153-1002-0004	. WASHER (AP)	4	
		RD114-8003-1004	. NUT (AP)	4	
-63	5	308651	. SUPPORT, Duct, customer, heat exchanger	1	
-64	5	RD111-1009-0430	. BOLT (AP)	2	
-65	5	LD153-0013-0002	. WASHER (AP)	2	
-66	5	308654	. BUSHING, Support, customer connect duct (AP)	2	
-67	5	MS9201-07	. NUT (AP)	2	
-68	5	308662	. SPACER, Dome bolt, pressure line support	1	
-69	2,5	209250	DOME ASSY, Injector thrust chamber (NHA 209201) (LC)	REF	
-69	2,5	209250-11	DOME ASSY, Injector thrust chamber (NHA 209201) (LC)	REF	

Figures 3 and 4 deleted.

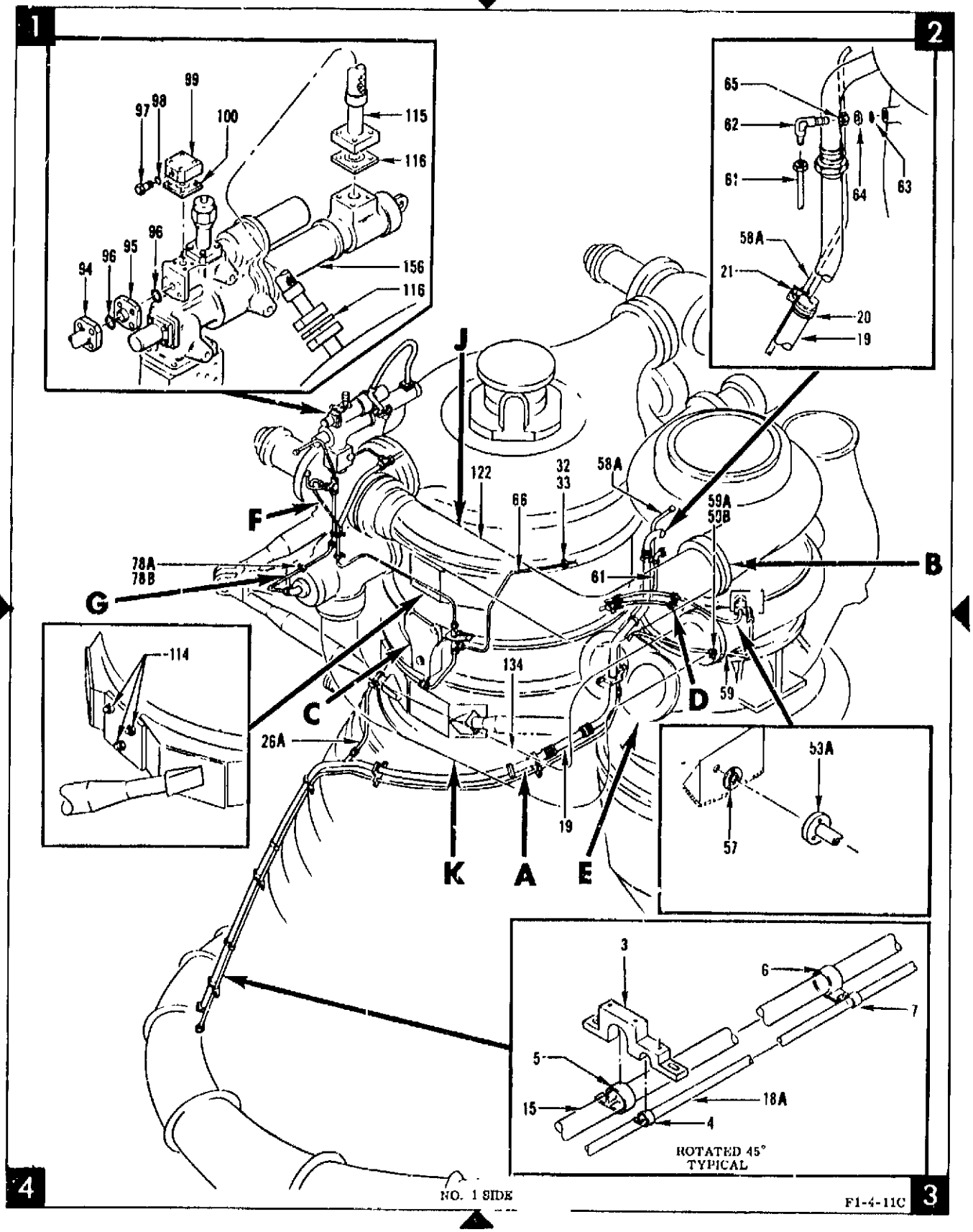

Figure 5. Propellant Feed System Installation — No. 1 Side (Sheet 1 of 4)

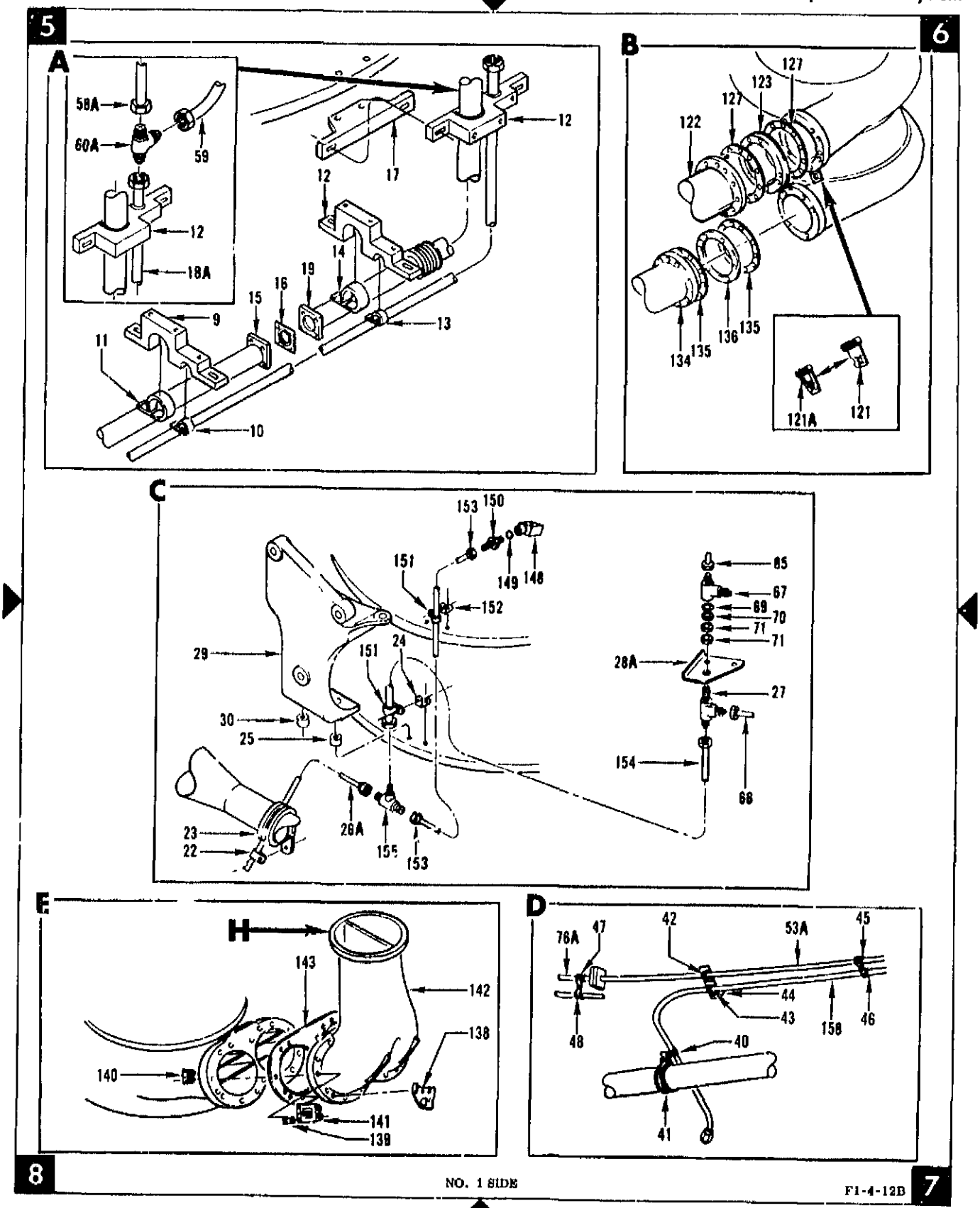

Figure 5. Propellant Feed System Installation — No. 1 Side (Sheet 2 of 4)

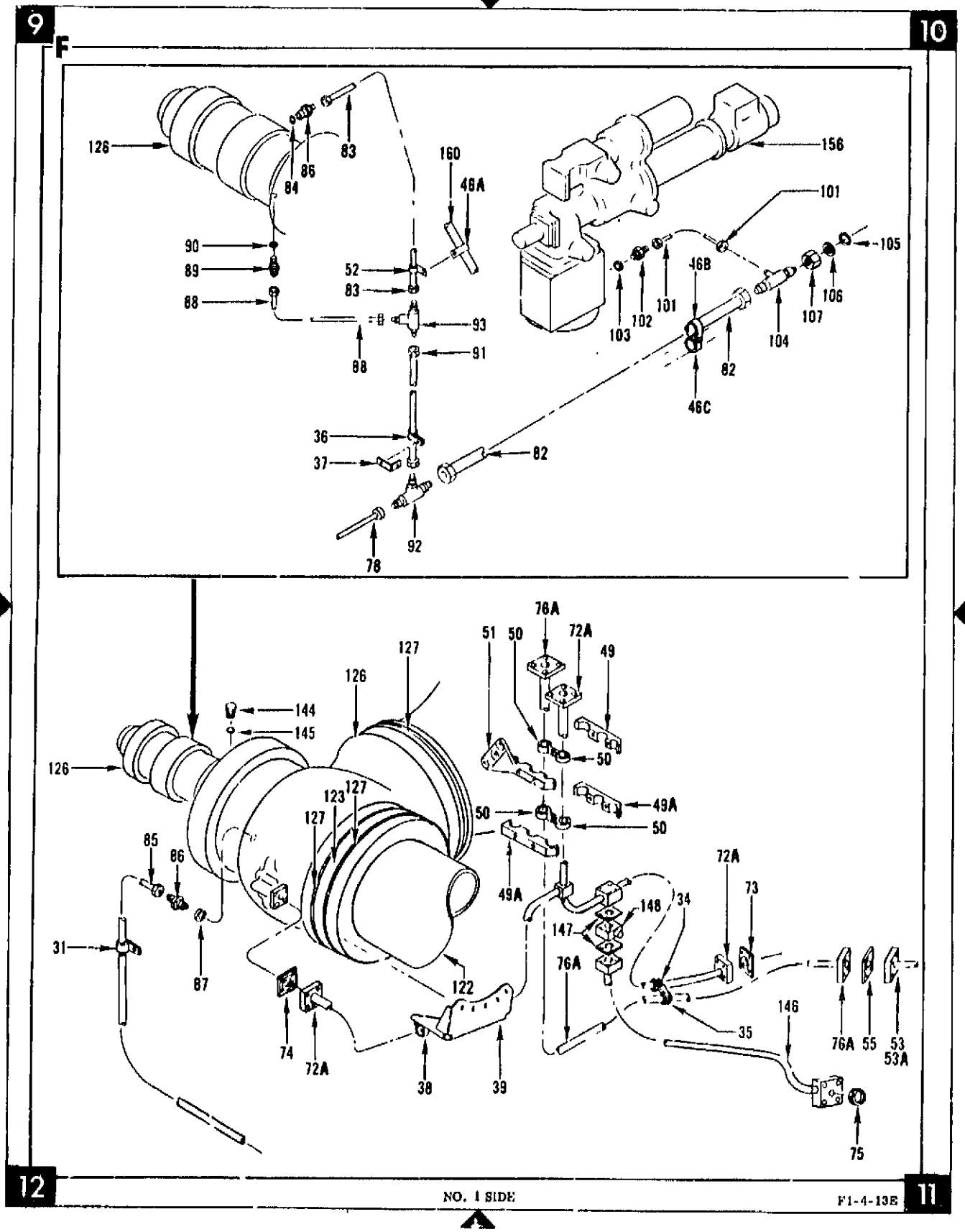

Figure 5. Propellant Feed System Installation — No. 1 Side (Sheet 3 of 4)

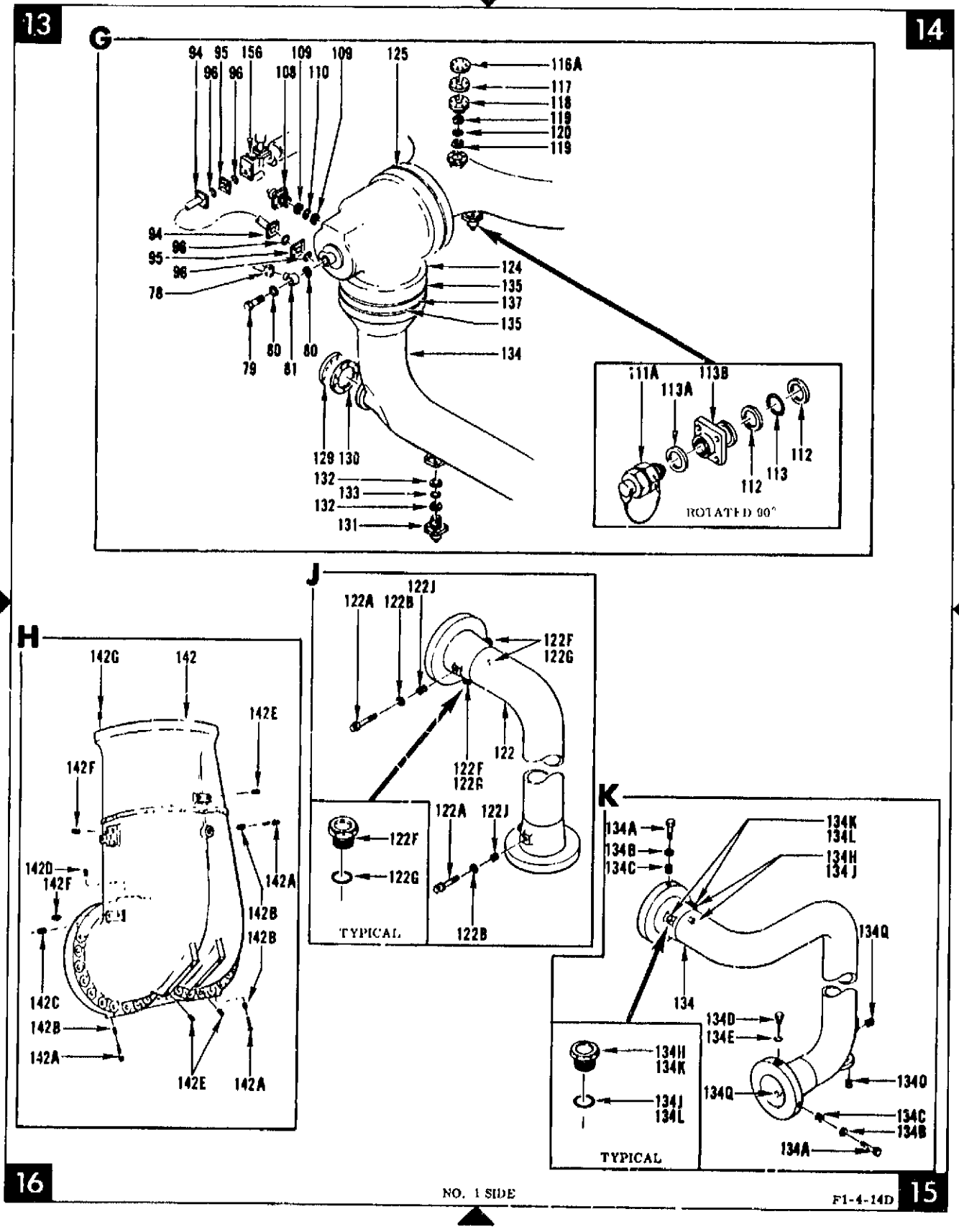

Figure 5. Propellant Feed System Installation — No. 1 Side (Sheet 4 of 4)

FIG & INDEX NO	ZONE NO	PART NUMBER	1 2 3 4 5 6 7 DESCRIPTION	UNITS PER ASSY		USABLE ON CODE
5-		407001	PROPELLANT FEED SYSTEM INSTL (See figure 1, index 2, for REQMT)			
			(Propellant feed system INSTL, engines F-2029 THRU F-2042)	REF		
			(Propellant feed system INSTL, engines F-2043 THRU F-2098)		REF	
			PARTIAL BREAKDOWN FOLLOWS			
- 1		DELETED				
- 2		DELETED				
- 3	3	408232	. CLAMP, Overboard manifold drain, oxidizer	3	3	
		RD111-1010-6416	. BOLT (AP)	2	2	
		RD153-5002-0004	. WASHER (AP)	2	2	
		RD153-1002-0004	. WASHER (AP)	2	2	
		NAS679C4W	. NUT (AP)	2	2	
- 4	3	RE127-2002-0006	. CLAMP	3	3	
- 5	3	RE127-2002-0020	. CLAMP	3	3	
- 6	3	RE127-2004-0020	. CLAMP	2	2	
- 7	3	RE127-2001-0006	. CLAMP	2	2	
		AN520C10R28	. SCREW (AP)	1	1	
		AN520C10H8	. SCREW (AP)	1	1	
		NAS43HT3-56	. SPACER (AP)	1	1	
		LD153-0010-0007	. WASHER (AP)	1	1	
		NAS679C3W	. NUT (AP)	1	1	
- 8		DELETED				
- 9	5	408232	. CLAMP, Overboard manifold drain, oxidizer	1	1	
		RD111-1010-6416	. BOLT (AP)	2	2	
		RD153-5002-0004	. WASHER (AP)	2	2	
		RD153-1002-0004	. WASHER (AP)	2	2	
		NAS679C4W	. NUT (AP)	2	2	
-10	5	RE127-2002-0006	. CLAMP	1	1	
-11	5	RE127-2002-0020	. CLAMP	1	1	
-12	5,6	408230	. CLAMP, Overboard drain, oxidizer	2	2	
		RD111-1010-6416	. BOLT (AP)	2	2	
		RD153-5002-0004	. WASHER (AP)	2	2	
		RD153-1002-0004	. WASHER (AP)	2	2	
		RD114-8005-1004	. NUT (AP)	2	2	
-13	5	RE127-2002-0006	. CLAMP	2	2	
-14	5	RE127-2002-0018	. CLAMP	2	2	
-15	3,5	408245	. LINE ASSY, Oxidizer, overboard drain (Welded) (LC)	1	1	
		RD111-4011-6426	. BOLT (AP)	4	4	
		RD153-5002-0004	. WASHER (AP)	4	4	
		RD153-1002-0004	. WASHER (AP)	4	4	
		RD114-8005-1004	. NUT (AP)	4	4	
		RD172-0001-0001	. . TAPE (ROCKET OXIDIZER)	AR	AR	
		RD172-0014-0040	. . TAPE (DRAIN)	AR	AR	
		RD172-0018-0001	. . TAPE (1 PSI)	AR	AR	
-16	5	408760	. SEAL, Pressure-actuated, cryogenic (LC)	1	1	
-17	5	408350	. SUPPORT, Bracket, oxidizer overboard drain	1	1	
		RD111-4009-0612	. BOLT (AP)	2	2	
		RD153-5002-0006	. WASHER (AP)	2	2	
		RD153-1002-0006	. WASHER (AP)	2	2	
		RD114-8005-1006	. NUT (AP)	2	2	
-18		DELETED				
-18A	3,5	408841	. TUBE ASSY, Nitrogen purge, overboard drain (LC)	1	1	
		AN818-8J	. . NUT (Replaces AN818-8C for all applications)	2	2	
		MS20819-8J	. . SLEEVE (Replaces MS20819-8C for all applications)	2	2	
		RD172-0014-0060	. . TAPE (NITROGEN)	AR	AR	
		RD172-0014-0040	TAPE (DRAIN)	AR	AR	
		RD172-0007-0001	. . TAPE (COMPRESSED GAS)	AR	AR	
		408841-3	. . TUBE, 321 CRES, 1/2 IN. OD by 0.042 gage	1	1	
-19	2,3,5	410002	. TUBE ASSY, Seal vent, oxidizer (Welded) (LC)	1	1	
		AN818-20J	. . NUT (Replaces AN818-20C for all applications)	1	1	
		MS20819-20J	. . SLEEVE (Replaces MS20819-20C for all applications)	1	1	
		RD172-0001-0001	. . TAPE (ROCKET OXIDIZER)	AR	AR	
		RD172-0014-0040	. . TAPE (DRAIN)	AR	AR	
		RD172-0018-0001	. . TAPE (1 PSI)	AR	AR	
-20	2	RE127-2001-0018	. CLAMP	1	1	
-21	2	RE127-2001-0006	. CLAMP	1	1	
		AN520C10R24	. SCREW (AP)	1	1	
		NAS43HT3-56	. SPACER (AP)	1	1	
		LD153-0010-0007	. WASHER (AP)	1	1	
		NAS679C3W	. NUT (AP)	1	1	
-22	8	RE127-2001-0006	. CLAMP	1	1	
-23	8	RE127-2001-0026	. CLAMP	1	1	
		AN520C10R20	. SCREW (AP)	1	1	
		LD153-0010-0007	. WASHER (AP)	1	1	
		NAS43HT3-48	. SPACER (AP)	1	1	
		NAS679C3W	. NUT (AP)	1	1	

FIG & INDEX NO	ZONE NO	PART NUMBER	1 2 3 4 5 6 7 DESCRIPTION	UNITS PER ASSY		USABLE ON CODE
5-21	8	MS9104-11	. BRACKET	1	1	
		RD111-1009-0019	. BOLT (AP)	1	1	
		RD153-5002-0006	. WASHER (AP)	1	1	
		RD153-1002-0006	WASHER (AP)	1	1	
		RD114-8005-1006	. NUT (AP)	1	1	
-25	8	601922-3	. BUSHING, Support, 4-way valve, hydraulic control system	1	1	
-26		DELETED				
-26A	8	410080	. TUBE ASY, Fuel lateral, oxidizer overboard drain (LC)	1	1	
		AN818-8J	. . NUT, Replaces AN818-8C for all applications)	2	2	
		MS20819-8J	. . SLEEVE (Replaces MS20819-8C for all applications)	2	2	
		RD172-0001-0001	. TAPE (ROCKET EXCITER)	AR	AR	
		RD172-0011-0027	. TAPE (LIQUID OXYGEN)	AR	AR	
		410080-3	. . TUBE, 321 CRES, 1.2 IN. OD by 0.049 gage	1	1	
-27	7	RE273-1005-0301	. HOSE ASY	1	1	
-28		DELETED				
-28A	7	410081	BRACKET, Support, oxidizer drain	1	1	
		RD111-1009-0010	. BOLT (AP)	2	2	
		RD153-5002-0006	. WASHER (AP)	2	2	
		RD153-1002-0006	. WASHER (AP)	2	2	
		RD111-8005-1006	. NUT (AP)	2	2	
-29	8	408307	. SUPPORT, Filter, propellant feed system	1	1	
		RD111-1009-0011	. BOLT (AP)	3	3	
		RD111-1009-0018	. BOLT (AP)	1	1	
		RD153-5002-0006	WASHER (AP)	1	1	
		RD153-1002-0006	. WASHER (AP)	1	1	
		RD114-8005-1006	. NUT (AP)	1	1	
-30	8	601922-3	. BUSHING, Support, 4-way valve, hydraulic control system	1	1	
-31	12	RE127-2001-0002	. CLAMP	1	1	
		AN520C10R8	. SCREW (AP)	1	1	
		LD153-0010-0007	. WASHER (AP)	1	1	
		NAS679C3W	. NUT (AP)	1	1	
-32	2	RE127-2001-0002	. CLAMP	1	1	
		AN520C10R8	. BOLT (AP)	1	1	
		LD153-0010-0007	WASHER (AP)	1	1	
		NAS679C3W	. NUT (AP)	1	1	
-33	2	MS9104-15	. BRACKET	1	1	
		MS35276-263	. BOLT (AP)	1	1	
		LD153-0010-0007	. WASHER (AP)	1	1	
-34	11	RE127-2001-0004	. CLAMP	1	1	
-35	11	RE127-2001-0006	. CLAMP	1	1	
		AN520C10R8	SCREW (AP)	1	1	
		LD153-0010-0007	. WASHER (AP)	1	1	
		NAS679C3W	NUT (AP)	1	1	
-36	9	RE127-2001-0001	. CLAMP	1	1	
		AN520C10R8	. SCREW (AP)	1	1	
		LD153-0010-0007	. WASHER (AP)	1	1	
		NAS679C3W	NUT (AP)	1	1	
-37	9	MS9102-12	. BRACKET	1	1	
-38	12	RE127-2001-0006	. CLAMP	2	2	
		AN520C10R8	. SCREW (AP)	1	1	
		LD153-0010-0007	. WASHER (AP)	1	1	
		NAS679C3W	. NUT (AP)	1	1	
-39	11	703636-2	. BRACKET, Harness support, main valve potentiometer	1	1	
		RD111-1009-3508	. BOLT (AP)	5	5	
		LD153-0013-0003	. WASHER (AP)	5	5	
-40	7	RE127-2001-0006	. CLAMP	1	1	
-41	7	RE127-2001-0033	. CLAMP	1	1	
		AN520C10R16	. SCREW (AP)	1	1	
		LD153-0010-0007	. WASHER (AP)	1	1	
		NAS43HT3-32	. SPACER (AP)	1	1	
		NAS679C3W	. NUT (AP)	1	1	
-42	7	RE127-2001-0004	. CLAMP	1	1	
-43	7	RE127-2001-0006	. CLAMP	1	1	
		AN520C10R8	. SCREW (AP)	1	1	
		LD153-0010-0007	. WASHER (AP)	1	1	
		NAS679C3W	. NUT (AP)	1	1	
-44	7	408829	. BRACKET, Tube support	1	1	
		RD111-1009-0305	. BOLT (AP)	1	1	
		RD153-5002-0003	. WASHER (AP)	1	1	
-45	7	RE127-2001-0001	. CLAMP	1	1	
-46	7	RE127-2001-0006	. CLAMP	1	1	
		AN520C10R8	. SCREW (AP)	3	3	
		LD154-0010-0007	WASHER (AP)	1	1	
		NAS679C3W	NUT (AP)	1	1	

FIG & INDEX NO	ZONE NO	PART NUMBER	DESCRIPTION 1 2 3 4 5 6 7	UNITS PER ASSY		USABLE ON CODE
5-46A	9	RE127-2001-0006	. CLAMP	1	1	
		AN520C10R28	. SCREW (AP)	1	1	
		LD153-0010-0007	. WASHER (AP)	1	1	
		NAS43HT3-80	. SPACER (AP)	1	1	
		NAS679C3W	. NUT (AP)	1	1	
-46B	10	RE127-2001-0006	. CLAMP	1	1	
-46C	10	RE127-2001-0004	. CLAMP	1	1	
		AN520C10R14	. SCREW (AP)	1	1	
		LD153-0010-0007	. WASHER (AP)	1	1	
		NAS43HT3-32	. SPACER (AP)	1	1	
		NAS679C3W	. NUT (AP)	1	1	
-47	7	RE127-2001-0004	. CLAMP	1	1	
-48	7	RE127-2001-0008	. CLAMP	1	1	
		AN520C10R8	. SCREW (AP)	1	1	
		LD153-0010-0007	. WASHER (AP)	1	1	
		NAS679C3W	. NUT (AP)	1	1	
-49	11	408252	. COVER, Purge line support, LOX cone flange	1	1	
		RD111-1010-0429	. BOLT (AP)	2	2	
		RD153-5001-0004	. WASHER (AP)	2	2	
		RD153-1002-0004	. WASHER (AP)	2	2	
		RD114-8003-1004	. NUT (AP)	2	2	
-49A	11	408252	. COVER, Purge line support, LOX dome flange	2	2	
		RD111-1010-3428	. BOLT (AP)	2	2	
		RD153-5002-0004	. WASHER (AP)	2	2	
		RD153-1002-0004	. WASHER (AP)	2	2	
		RD114-8003-2004	. NUT (AP)	2	2	
-50	11	RE127-2003-0010	. CLAMP	2	2	
-51	11	408251	. SUPPORT, Purge line, LOX dome flange	1	1	
		RD111-1009-0509	. BOLT (AP)	3	3	
		RD153-5001-0005	. WASHER (AP)	3	3	
-52	9	RE127-2001-0002	. CLAMP	1	1	
		AN520C10R28	. SCREW (AP)	1	1	
		LD153-0010-0007	. WASHER (AP)	1	1	
		NAS679C3W	. NUT (AP)	1	1	
		NAS43HT3-80	. SPACER	1	1	
-53		DELETED				
-53A	3, 7, 11	410089	. TUBE ASSY, Purge, oxidizer pump seal, pump end (Welded) (Turbopump oxidizer seal purge tube - pump end) (LC)	1	1	
		RD111-1011-6124	. BOLT (Intfc-oxidizer pump seal purge) (AP)	3	3	
		RD111-1010-6425	. BOLT (Intfc-seal purge pump line) (AP)	4	4	
		RD153-5002-0004	. WASHER (Intfc-oxidizer pump seal purge) (AP)	3	3	
		RD153-5004-0004	. WASHER (Intfc-seal purge pump line) (AP)	4	4	
		RD153-1002-0004	. WASHER (AP)	4	4	
		RD114-8005-1004	. NUT (Intfc-oxidizer pump seal purge) (AP)	3	3	
		RD114-8003-1004	. NUT (Intfc-seal purge pump line) (AP)	4	4	
		RD172-0018-0600	. . TAPE (600 PSI)	AR	AR	
		RD172-0014-0039	. . TAPE (FLOW)	AR	AR	
		RD172-0001-0001	. . TAPE (ROCKET OXIDIZER)	AR	AR	
		RE127-2001-0004	. CLAMP	1	1	
		MS9102-01	. BRACKET	1	1	
		AN520C10R8	. SCREW (AP)	1	1	
		LD153-0010-0007	. WASHER (AP)	1	1	
		NAS679C3W	. NUT (AP)	1	1	
-54		DELETED				
-55	11	19-406332-5	. SEAL ASSY, Plate (LC)	1	1	
-56		DELETED				
-57	3	408784	. SEAL, Pressure-actuated, cryogenic (LC)	1	1	
-58		DELETED				
-58A	2, 5	408839	. TUBE ASSY, Nitrogen purge, overboard drain (LC)	1	1	
		AN818-8J	. . NUT (Replaces AN818-8C for all applications)	2	2	
		MS20819-8J	. . SLEEVE (Replaces MS20819-8C for all applications)	2	2	
		RD172-0014-0030	. . TAPE (NITROGEN)	AR	AR	
		RD172-0014-0040	. . TAPE (DRAIN)	AR	AR	
		RD172-0007-0001	. . TAPE (COMPRESSED GAS)	AR	AR	
		408839-3	. . TUBE, 321 CRES, 1/2 IN. OD by 0.042 gage	1	1	
-59	3, 5	408840	. TUBE ASSY, Nitrogen purge, overboard drain (LC)	1	1	
		AN818-6J	. . NUT (Replaces AN818-6C for all applications)	2	2	
		MS20819-6J	. . SLEEVE (Replaces MS20819-6C for all applications)	2	2	
		RD172-0014-0030	. . TAPE (NITROGEN)	AR	AR	
		RD172-0014-0040	. . TAPE (DRAIN)	AR	AR	
		RD172-0007-0001	. . TAPE (COMPRESSED GAS)	AR	AR	
		408840-3	. . TUBE, 321 CRES, 3/8 IN. OD by 0.042 gage	1	1	
-59A	2	RE127-2001-0004	. CLAMP	1	1	
		AN520C10R8	. BOLT (AP)	1	1	— — 1
		LD153-0010-0007	. WASHER (AP)	1	1	
		NAS679C3W	. NUT (AP)	1	1	
-59B	2	MS9102-01	. BRACKET	1	1	

FIG & INDEX NO	ZONE NO	PART NUMBER	DESCRIPTION 1 2 3 4 5 6 7	UNITS PER ASSY		USABLE ON CODE
5-60		DELETED				
-60A	5	RE272-4006-0001	. TEE (LC)	1	1	
-61	2	408236	. LINE ASSY, Bearing lube drain, inboard (Welded) (No. 2 bearing lube drain line) (LC)	1	1	TJ
		RD172-0005-0001	. . TAPE (LUBRICATION)	AR	AR	
		RD172-0014-0030	. . TAPE (NITROGEN)	AR	AR	
		RD172-0014-0033	. . TAPE (RP-1)	AR	AR	
		RD172-0018-0050	. . TAPE (50 PSI)	AR	AR	
-62	2	RE273-5002-0002	. ELBOW (LC)	1	1	TJ
-63	2	RD262-3001-0008	. GASKET (LC)	1	1	TJ
-64	2	MS9058-08	. RING (LC)	1	1	TJ
-65	2	RD114-1003-1008	. NUT (LC)	1	1	TJ
-66	2, 7	408847	. TUBE ASSY, Oxidizer vent, union to tee, overboard drain (LC)	1	1	
		AN818-4J	. . NUT (Replaces AN818-4C for all applications)	2	2	
		MS20819-4J	. . SLEEVE (Replaces MS20819-4C for all applications)	2	2	
		RD172-0001-0001	. . TAPE (ROCKET OXIDIZER)	AR	AR	
		RD172-0014-0027	. . TAPE (LIQUID OXYGEN)	AR	AR	
		408847-3	. . TUBE 321 CRES, 1/4 IN. OD by 0.028 gage	1	1	
-67	6	RE273-4003-0001	. TEE (LC)	1	1	
-68	5	RD262-3001-0006	. GASKET (LC)	1	1	
-69	6	MS9058-06	. RING (LC)	1	1	
-70	7	LD114-1003-1006	. NUT (LC)	1	1	
-71	7	AN924-6S	. NUT (Supersedes AN924-6C)	1	1	
-72		DELETED				
-72A	11	410079	. TUBE ASSY, Dome purge, NO. 1 main oxidizer valve (NO. 1 oxidizer dome purge tube) (LC)	1	1	
		RD111-1009-0417	. BOLT (Intfc-NO. 1 oxidizer valve) (AP)	4	4	
		RD111-4009-0419	. BOLT (Intfc-gas generator injector fuel inlet tee housing (AP)	4	4	
		RD111-1010-6425	. BOLT (Intfc-NO. 2 main oxidizer valve dome purge line) (AP)	4	4	
		LD153-0013-0002	. WASHER (Intfc-NO. 1 oxidizer valve) (AP)	4	4	
		LD153-0013-0002	. WASHER (Intfc-NO. 2 main oxidizer valve dome purge line) (AP)	4	4	
		RD153-1002-0004	. WASHER (Intfc-gas generator injector fuel inlet tee housing) (AP)	4	4	
		RD153-1002-0004	. WASHER (Intfc-NO. 2 main oxidizer valve dome purge line) (AP)	4	4	
		RD114-8005-1004	. NUT (Intfc-gas generator injector fuel inlet tee housing) (AP)	4	4	
		RD114-8003-1004	. NUT (Intfc-NO. 2 main oxidizer valve dome purge line) (AP)	4	4	
		RD172-0001-0001	. . TAPE (ROCKET OXIDIZER)	AR	AR	
		RD172-0007-0012	. . TAPE (NITROGEN OXIDIZER PURGE)	AR	AR	
		RD172-0014-0039	. . TAPE (FLOW)	AR	AR	
		RD172-0018-1750	. . TAPE (1750 PSI)	AR	AR	
-73	11	19-406332-9	. SEAL ASSY, Plate (LC)	1	1	
-74	12	RD251-4082-0431	. ORIFICE PLATE (NO. 1 oxidizer dome purge orifice) (LC)	1	1	
-75	11	RD261-2010-0018	. SEAL (LC)	1	1	
-76		DELETED				
-76A	7, 10, 11	410088	. LINE ASSY, Purge, pump seal (Welded) (Turbopump seal purge line) (LC)	1	1	
		RD172-0001-0001	. . TAPE (ROCKET FUEL)	AR	AR	
		RD172-0014-0039	. . TAPE (FLOW)	AR	AR	
		RD172-0018-0125	. . TAPE (125 PSI)	AR	AR	
-77		DELETED				
-78	9, 13	409212	. TUBE ASSY, Main fuel valve NO. 1 potentiometer vent drain (NO. 1 fuel valve position transducer vent drain tube) (LC)	1	1	
		AN818-4J	. . NUT (Replaces AN818-4C for all applications)	2	2	
		MS20819-4J	. . SLEEVE (Replaces MS20819-4C for all applications)	2	2	
		RD172-0014-0040	. . TAPE (DRAIN)	AR	AR	
		RD172-0002-0001	. . TAPE (ROCKET FUEL)	AR	AR	
		RD172-0014-0033	. . TAPE (RP-1)	AR	AR	
		RD172-0014-0039	. . TAPE (FLOW)	AR	AR	
		409212-3	. . TUBE, 321 CRES, 1/4 IN. OD by 0.028 gage	1	1	
-78A	1	RE127-2001-0002	CLAMP	1	1	
		AN520C10R3	. SCREW (AP)	1	1	
		RD153-5002-0004	. WASHER (AP)	1	1	
		LD153-0010-0007	. WASHER (AP)	1	1	
		NAS679C3W	. NUT (AP)	1	1	
-78B	1	MS9102-01	. BRACKET	1	1	
		RD111-4010-6408	. BOLT (AP)	1	1	
		RD153-5002-0004	. WASHER (AP)	1	1	
-79	13	500103C1	. BOLT (MFD by 08199) (LC)	1	1	
-80	13	RE261-3004-1004	. SEAL (Interchangeable with 12100AA4 MFD by 08199) (LC)	2	2	
-81	13	500101C4	. ELBOW (MFD by 08199) (LC)	1	1	
-82	10	408335	. TUBE ASSY, Cross to tee, fuel overboard drain (Fuel overboard drain tube (NO. 1 side) (LC)	1	1	
		AN818-8J	. . NUT (Replaces AN818-8C for all applications)	2	2	
		MS20819-8J	. . SLEEVE (Replaces MS20819-8C for all applications)	2	2	
		RD172-0002-0001	. . TAPE (ROCKET FUEL)	AR	AR	
		RD172-0014-0033	. . TAPE (RP-1)	AR	AR	
		RD172-0014-0040	. . TAPE (DRAIN)	AR	AR	
		RD172-0014-0039	. . TAPE (FLOW)	AR	AR	
		408335-3	. . TUBE, 321 CRES, 1/2 IN. OD by 0.042 gage	1	1	

FIG & INDEX NO	ZONE NO	PART NUMBER	DESCRIPTION 1 2 3 4 5 6 7	UNITS PER ASSY		USABLE ON CODE
5-83	9	408336	. TUBE ASSY, Drain, main oxidizer valve to NO. 1 actuator seal (NO. 1 oxidizer valve actuator seal fuel drain tube) (LC)	1	1	
		AN818-4J	. . NUT (Replaces AN818-4C for all applications)	2	2	
		MS20819-4J	. . SLEEVE (Replaces MS20819-4C for all applications)	2	2	
		RD172-0002-0001	. . TAPE (ROCKET FUEL)	AR	AR	
		RD172-0014-0033	. . TAPE (RP-1)	AR	AR	
		RD172-0014-0040	. . TAPE (DRAIN)	AR	AR	
		408336-3	. . TUBE, 321 CRES, 1/4 IN. OD by 0.028 gage by 18.00 IN. LG	1	1	
-84	9	RE261-3004-0004	. SEAL (Interchangeable with 12100CR4 MFD by 08199) (LC)	1	1	
-85	6, 12	408246	. TUBE ASSY, Main oxidizer valve NO. 1, actuator rod seal vent (LC)	1	1	
		AN818-4J	. . NUT (Replaces AN818-4C for all applications)	2	2	
		MS20819-4J	. . SLEEVE (Replaces MS20819-4C for all applications)	2	2	
		RD172-0001-0001	. . TAPE (ROCKET OXIDIZER)	AR	AR	
		RD172-0014-0027	. . TAPE (LIQUID OXYGEN)	AR	AR	
		408246-3	. . TUBE, 321 CRES, 1/4 IN. OD by 0.028 gage	1	1	
-86	9, 12	AN815-4J	. UNION (Supersedes AN815-4C) (LC)	2	2	
-87	12	RE261-3004-0004	. SEAL (Interchangeable with 12100CR4 MFD by 08199) (LC)	1	1	
-88	9	408337	. TUBE ASSY, Main oxidizer valve NO. 1 shaft seal, fuel drain (NO. 1 oxidizer valve shaft seal fuel drain tube) (LC)	1	1	
		AN818-4J	. . NUT (Replaces AN818-4C for all applications)	2	2	
		MS20819-4J	. . SLEEVE (Replaces MS20819-4C for all applications)	2	2	
		RD172-0002-0001	. . TAPE (ROCKET FUEL)	AR	AR	
		RD172-0014-0033	. . TAPE (RP-1)	AR	AR	
		RD172-0014-0040	. . TAPE (DRAIN)	AR	AR	
		RD172-0014-0039	. . TAPE (FLOW)	AR	AR	
		408337-3	. . TUBE, 321 CRES, 1/4 IN. OD by 0.028 gage by 14.00 IN. LG	1	1	
-89	9	AN815-4S	. UNION (Supersedes AN815-4C) (LC)	1	1	
-90	9	RE261-3004-0004	. SEAL (Interchangeable with 12100CR4 MFD by 08199) (LC)	1	1	
-91	9	408346	. TUBE ASSY, Drain, fuel overboard, tee to cross (NO. 1 oxidizer valve fuel overboard drain tube) (LC)	1	1	
		AN818-6J	. . NUT (Replaces AN818-6C for all applications)	2	2	
		MS20819-6J	. . SLEEVE (Replaces MS20819-6C for all applications)	2	2	
		RD172-0014-0040	. . TAPE (DRAIN)	AR	AR	
		RD172-0002-0001	. . TAPE (ROCKET FUEL)	AR	AR	
		RD172-0014-0033	. . TAPE (RP-1)	AR	AR	
		RD172-0014-0039	. . TAPE (FLOW)	AR	AR	
		408346-3	. . TUBE, 321 CRES, 3/8 IN. OD by 0.035 gage	1	1	
-92	9	GA7025C464	. TEE (MFD by 03647) (Alternate RE273-4004-0001) (LC)	1	1	
-93	9	GA7025C486	. TEE (MFD by 03647) (Alternate RE273-4004-0004) (LC)	1	1	
-94	1, 13	409205	. TUBE ASSY, Igniter fuel supply (Welded) (LC)	1	1	
		RD111-1009-3425	. BOLT (AP)	8	8	
		RD153-5002-0004	. WASHER (AP)	8	8	
		RD172-0018-2000	. . TAPE (2000 PSI)	AR	AR	
		RD172-0002-0001	. . TAPE (ROCKET OXIDIZER)	AR	AR	
		RD172-0014-0033	. . TAPE (RP-1)	AR	AR	
		RD172-0014-0039	. . TAPE (FLOW)	AR	AR	
-95	1, 13	409256	. SPACER, Eccentric, engine supply tube and igniter fuel tube (LC)	2	2	
-96	1, 13	RD262 4006-0025	. O-RING (LC)	4	4	
-97	1	AN814-4JL	. PLUG AND BLEEDER (Supersedes AN814-4CL)(Tap IF-2)(LC)	1	1	
-98	1	RD262-3001-0004	. GASKET (LC)	1	1	
-99	1	406595	. ADAPTER, Hypergol bleed (Hypergol manifold bleed adapter) (LC)	1	1	
		RD111-1009-6319	. BOLT (AP)	4	4	
		RD153-5004-0003	. WASHER (AP)	4	4	
-100	1	19-406332-3	. SEAL ASSY, Plate (LC)	1	1	
-101	10	408242	. TUBE ASSY, Ignition monitor valve vent drain (LC)	1	1	
		AN818-6J	. . NUT (Replaces AN818-6C for all applications)	2	2	
		MS20819-6J	. . SLEEVE (Replaces MS20819-6C for all applications)	2	2	
		RD172-0014-0040	. . TAPE (DRAIN)	AR	AR	
		RD172-0006-0001	. . TAPE (HYDRAULIC)	AR	AR	
		RD172-0014-0011	. . TAPE (VENT)	AR	AR	
		408242-3	. . TUBE, 321 CRES, 3/8 IN. OD by 0.035 gage	1	1	
-102	10	AN919-6S	. REDUCER (Supersedes AN919-6C) (LC)	1	1	
-103	10	RD262-3001-0004	. GASKET (LC)	1	1	
-104	10	GA7026	. TEE (MFD by 03647) (Alternate RE273-4002-0001) (LC)	1	1	
-105	10	RD262-3001-0008	. GASKET (LC)	1	1	
-106	10	RD262-1002-0008	. RING (LC)	1	1	
-107	10	RD114-1003-1008	. NUT (LC)	1	1	
-108	13	NA5-260079T7	. COUPLING ASSY, High temperature, flight half (NO. 1 fuel valve purge quick-disconnect) (LC)	1	1	
		RD111-4008-0405	. BOLT (AP)	4	4	
		RD153-5002-0004	. WASHER (AP)	4	4	
-109	13	MS28774-018	. RETAINER (LC)	2	2	
-110	13	RD262-4006-0018	. O-RING (LC)	1	1	
-111		DELETED				
-111A	14	NA5-260079T1	. COUPLING ASSY, High temperature, flight half (NO. 1 fuel inlet manifold drain quick-disconnect) (LC)	1	1	
		RD111-4008-0508	. BOLT (AP)	4	4	
		RD153-5002-0005	. WASHER (AP)	4	4	
-112	14	MS28774-121	. RETAINER (LC)	2	2	
-113	14	RD262-4006-0121	. O-RING (LC)	1	1	

FIG & INDEX NO	ZONE NO	PART NUMBER	1 2 3 4 5 6 7 DESCRIPTION	UNITS PER ASSY		USABLE ON CODE
5-113A	14	RD262-3001-0006	. GASKET (LC)		1	
-113B	14	410631	. ADAPTER, Port, fuel drain (LC)		1	
-114	4	407753	. POST, Angle indicating device mount	3	3	
-115	1	407877	. LINE ASSY, Igniter injector end (Hypergol manifold outlet hose) (Welded) (LC)	1	1	VAF
-115	1	NA5-260163	. HOSE ASSY, Hypergol manifold to thrust chamber injector (Hypergol manifold outlet hose) (LC)		1	FBA
		RD111-1009-6418	. BOLT (Intfc-hypergol manifold) (AP)	4	4	
		RD111-1010-6428	. BOLT (Intfc-thrust chamber injector) (AP)	4	4	
		RD153-5003-0004	. WASHER (Intfc-hypergol manifold) (AP)	4	4	
		RD153-5004-0004	. WASHER (Intfc-thrust chamber injector) (AP)	4	4	
		RD153-1002-0004	. WASHER (Intfc-thrust chamber injector) (AP)	4	4	
		RD114-8003-1004	. NUT (Intfc-thrust chamber injector) (AP)	4	4	
		RD172-0002-0001	. . TAPE (ROCKET FUEL)	AR	AR	
		RD172-0014-0039	. . TAPE (FLOW)	AR	AR	
		RD172-0014-0033	. . TAPE (RP-1)	AR	AR	
		RD172-0018-2000	. . TAPE (2000 PSI)	AR	AR	
-116	1	19-406332-15	. SEAL ASSY, Plate (LC)	2	2	
		RK395-00095	. CLOSURE INSTL, Protective, fuel inlet manifold	1	1	
-116A	14	RK395-44006	. . PLATE, Circular, pressure seal (inert prefill check valve plate) (LC)	1	1	
		RD111-1010-6427	. . BOLT (AP)	6	6	
		RD153-5002-0004	. . WASHER (AP)	6	6	
		RD153-1002-0004	. . WASHER (AP)	6	6	
		RD114-8005-1004	. . NUT (AP)	6	6	
-117	14	19-408751-1	. SEAL, Plate (LC)	1	1	
-118	14	407825	. VALVE ASSY, Check inert prefill (Prefill check valve) (See figure 18 for breakdown) (LC)	1	1	
-119	14	MS28774-210	. RETAINER (LC)	2	2	
-120	14	AN6227B15	. PACKING (LC)	1	1	
-121	6	703628	. BRACKET, Mount, transducer	1		
-121A	6	704561	. BRACKET, Mount, transducer		1	
		RD111-4016-1092	. BOLT (AP)	3	3	
		409203	. WASHER, 5/8 bolt (AP)	3	3	
-122	1, 6, 12, 15	408802	. DUCT ASSY, Oxidizer, high pressure NO. 1 (Welded) (LC)	1		
-122	1, 6, 12, 15	409272	. DUCT ASSY, Oxidizer, high pressure NO. 1 (Welded) (LC)		1	CAE
-122	1, 6, 12, 15	409272-11	. DUCT ASSY, Oxidizer, high pressure NO. 1 (Welded) (LC)		1	FBA
		RD111-4016-1060	. BOLT (Intfc-NO. 1 oxidizer valve) (AP)	24	24	
		RD111-4016-1092	. BOLT (Intfc-NO. 1 LOX turbopump volute) (AP)	21	21	
		409203	. WASHER, 5/8 bolt (Intfc-NO. 1 oxidizer valve) (AP)	48	48	
		409203	. WASHER, 5/8 bolt (Intfc-NO. 1 LOX turbopump volute) (AP)	21	21	AHL
		408810	. WASHER, Ball seat (Intfc-NO. 1 oxidizer valve) (AP)	24	24	
		408810	. WASHER, Ball seat (Intfc-NO. 1 LOX turbopump volute) (AP)	24	24	
		408809	. WASHER, Ball socket (Intfc-NO. 1 oxidizer valve) (AP)	24	24	
		408809	. WASHER, Ball socket (Intfc-NO. 1 LOX turbopump volute) (AP)	24	24	
		408750	. WASHER, 5/8 nut (Intfc-NO. 1 LOX turbopump volute) (AP)	21	21	
		RD114-8005-2010	. NUT (Intfc-NO. 1 LOX turbopump volute) (AP)	21	21	
-122A	13, 16	RD111-9001-0016	. . BOLT (LC)		2	
-122B	13, 16	RD151-0113-0082	. . WASHER (LC)		2	
-122C THRU -122E		DELETED				
-122F	15, 16	AN814-4JL	. . PLUG AND BLEEDER (Supersedes AN814-4CL) (NHA 409272) (Taps PO2b-1, PO2c-1, PO2d-1, PO3-1) (LC)		4	
-122F	15, 16	AN814-4JL	. . PLUG AND BLEEDER (Supersedes AN814-4CL) (NHA 409272-11) (Taps PO2b-1 PO2c-1, PO3-1) (LC)		3	
-122G	15, 16	RE261-3004-0004	. . SEAL (Interchangeable with 12100SR4 MFD by 08199) (4 required with NHA 409272; 3 required with NHA 409272-11) (LC)		4	
-122H		DELETED				
-122J	13, 15	KNH624T6SP	. . INSERT (MFD by 29372) (LC)		2	
-123	6, 12	408805	. SPACER ASSY, Rigid duct oxidizer (LC)	2	2	AHL
-123	6, 12	410837	. SPACER, Oxidizer duct, rigid (Use -3 THRU -9, -13 THRU -19, -25 THRU -29, -33 and -35 as required where applicable) (LC)		2	ESA
-124	14	410910-11	. VALVE ASSY, Fuel (NO. 1 fuel valve) (See figure 19 for breakdown) (J76) (LC)	1	1	ETA
		RD111-4012-4022	. BOLT (AP)	20	20	
		RD153-5002-0010	. WASHER (AP)	20	20	
-125	13	RD251-4100-XXXX	. ORIFICE PLATE (LC) 1 main fuel orifice) (Orifice size determined by calibration tests) (LC)	1	1	
-126	9, 12	409465-21	. VALVE ASSY, Oxidizer (NO. 1 oxidizer valve) (See figure 15 for breakdown) (J70) (LC)	1	1	FTB
-126	9, 12	409465-11	. VALVE ASSY, Oxidizer (NO. 1 oxidizer valve) (See figure 15 for breakdown) (J70) (LC)	1	1	FTC
-126	9, 12	409465-31	. VALVE ASSY, Oxidizer (NO. 1 oxidizer valve) (See figure 15 for breakdown) (J70) (LC)	1	1	FCA

FIG & INDEX NO	ZONE NO	PART NUMBER	DESCRIPTION 1 2 3 4 5 6 7	UNITS PER ASSY		USABLE ON CODE
5-		RD111-4012-4021	. BOLT (AP)	24	24	
		RD153-5002-0010	. WASHER (AP)	24	24	
-127	6,12	306070-15	. SEAL, Pressure-actuated (LC)	5	5	
-128		DELETED				
-129	13	409263	. PLATE, Gimbal actuator, tap-off flange cover (Gimbal supply plate)(LC)	1	1	
		RD111-4008-6410	. BOLT (AP)	8	8	
		RD153-5003-0004	. WASHER (AP)	3	8	
-130	13,16	19-406337-8	. SEAL ASSY, Plate (LC)	1	1	
-131	13	NA5-260079T2	. COUPLING ASSY, High temperature, flight half (NO. 1 fuel high-pressure duct drain quick-disconnect) (LC)	1	1	
		RD111-4008-6408	. BOLT (AP)	4	4	
		RD153-5002-0004	. WASHER (AP)	4	4	
-132	13	MS28774-018	. RETAINER (LC)	2	2	
-133	13	RD262-4006-0018	. O-RING (LC)	1	1	
-134	3,6, 13,15	408804	. DUCT ASSY, Fuel, high pressure NO. 1 (Welded) (LC)	1		
-134	3,6, 13,15	409270	. DUCT ASSY, Fuel, high pressure NO. 1 (Welded) (LC)		1	CZE
-134	3,6, 13,15	409270-11	. DUCT ASSY, Fuel, high pressure NO. 1 (Welded) (LC)		1	FBA
		RD111-4016-1056	. BOLT (Intfc-NO. 1 fuel valve) (AP)	20	20	
		RD111-4012-4032	. BOLT (Intfc-NO. 1 fuel turbopump volute) (AP)	20	20	
		RD111-4016-1036	. BOLT (Intfc-NO. 1 high pressure fuel duct) (AP)	20	20	
		408810	. WASHER, Ball seat (Intfc-NO. 1 fuel valve) (AP)	20	20	
		408809	. WASHER, Ball socket (Intfc-NO. 1 fuel valve) (AP)	20	20	
		409203	. WASHER, 5/8 bolt (Intfc-NO. 1 fuel turbopump volute) (AP)	20	20	
		409203	. WASHER, 5/8 bolt (Intfc-NO. 1 high pressure fuel duct) (AP)	20	20	
-134A	15	RD111-9001-0020	. . BOLT (LC)		2	
-134B	15	RD153-0113-0082	. . WASHER (LC)		2	
-134C	15	KN624TSP	. . INSERT (MFD by 29372) (LC)		2	
-134D	15	MS9015-02	. . PLUG (LC)		2	
-134E	15	MS29512-02	. . PACKING (LC)		2	
-134F		DELETED				
-134G		DELETED				
-134H	15	AN814-4JL	. . PLUG AND BLEEDER (Supersedes AN814-4CL)(NHA 409270) (Taps PF2c-1, PF2d-1, PF3a-1) (LC)		3	
-134J	15	MS29512-04	. . PACKING (NHA 409270) (LC)		3	
-134K	15	AN814-4JL	. . PLUG AND BLEEDER (Supersedes AN814-CL)(NHA 409270-11) (Taps PF2d-1, PF3a-1) (LC)		2	
-134L	15	MS29512-04	. . PACKING (NHA 409270-11) (LC)		2	
-134M THRU -134P		DELETED				
-134Q	15	KN428TSP	. . INSERT (MFD by 29372)		16	
-135	6,14	19-406333	. SEAL ASSY, Plate, dual type (LC)	4	4	
-136	6	408825	. SPACER ASSY, Fuel duct, rigid, volute (LC)	1	1	AHL
-136	6	410835	. SPACER, Fuel duct, rigid duct (Use -11, -21, -31, and -41 as required where applicable) (LC)		1	ESA
-137	14	408806	. SPACER ASSY, Rigid duct fuel (LC)	1	1	AHL
-137	14	410836	. SPACER, Fuel duct, rigid (Use -3, -5, -7 as required where applicable) (LC)		1	ESA
-138	8	502976-3	. PANEL, Igniter harness	1	1	
		RD111-4013-3755	. BOLT (AP)	2	2	
		RD153-5003-0007	. WASHER (AP)	2	2	
		RD153-5002-0007	. WASHER (AP)	2	2	
		703104	. SPACER, J-Box support (AP)	2	2	
		RD114-8005-2007	. NUT (AP)	2	2	
-139	8	703902	. BRACKET, Harness support, primary "J" box support	1	1	
		RD111-4011-6422	. BOLT (AP)	2	2	
		RD111-4009-0408	. BOLT (AP)	1	1	
		RD153-5002-0004	. WASHER (AP)	3	3	
		RD153-5002-0004	. WASHER (AP)	3	3	
		RD114-8005-1004	. NUT (AP)	3	3	
-140	8	703111	. ANGLE, J-Box support	1	1	
-141	8	703108-5	. SUPPORT, Primary auxiliary J-Box struts	1	1	
		RD111-4012-3755	. BOLT (AP)	2	2	
		RD153-5002-0007	. WASHER (AP)	2	2	
		703104	. SPACER, J-Box support (AP)	2	2	
-142	8,16	404913	. ELBOW ASSY, Fuel inlet, NO. 1 (LC)	1	1	
		RD111-4013-3744	. BOLT (AP)	14	14	
		RD111-4012-3724	. BOLT (AP)	18	18	
		RD153-5003-0007	. WASHER (AP)	46	46	
		RD114-8005-2007	. NUT (AP)	14	14	
-142A	16	RD111-9001-0018	. . BOLT (LC)	3	3	
-142B	16	KN624SP	. . INSERT (MFD by 29372) (LC)	3	3	
-142C	16	KNH720T13SP	. . INSERT (MFD by 29372)	13	13	
-142D	16	KNH720-16SP	. . INSERT (MFD by 29372)	4	4	
-142E	16	KN428SP	. . INSERT (MFD by 29372)	6	6	

FIG & INDEX NO	ZONE NO	PART NUMBER	DESCRIPTION 1 2 3 4 5 6 7	UNITS PER ASSY		USABLE ON CODE
5-142F	16	KN428-4SP	. . INSERT (MFD by 29372)	6	6	
-142G	16	KN1524-9SP	. . INSERT (MFD by 29372)	40	40	
		AN814-4S	. PLUG AND BLEEDER (Used on 404913) (Supersedes AN814-4C) (Tap KF6b-1) (LC)	1	1	
		RD262-3001-0004	. GASKET (Used on 404913) (LC)	1	1	
		AN814-2S	. PLUG AND BLEEDER (Used on 404913) (Supersedes AN814-2C) (LC)	1	1	
		RD262-3001-0002	. GASKET (Used on 404913) (LC)	1	1	
-143	8	19-406340	. SEAL ASSY, Plate, dual type (LC)	1	1	
-144	12	AN814-4SL	. PLUG AND BLEEDER (Supersedes AN814-4CL) (LC)	1	1	
-145	12	RE261-3004-0004	. SEAL (Interchangeable with 12100CR4 MFD by 08199) (LC)	1	1	
-146	11	410098	. TUBE ASSY, Flanged, oxidizer purge, gas generator (Welded) (LC)	1	1	
		RD111-4010-0431	. BOLT (AP)	4	4	
		RD153-5002-0004	. WASHER (AP)	4	4	
		RD172-0001-0001	. . TAPE (ROCKET OXIDIZER)	AR	AR	
		RD172-0014-0039	. . TAPE (FLOW)	AR	AR	
		RD172-0018-1750	. . TAPE (1750 PSI)	AR	AR	
-147	11	19-406332-5	. SEAL ASSY, Plate (LC)	2	2	
-148	6	108740	. MANIFOLD, Bypass, oxidizer purge, gas generator (LC)	1	1	
-149	6	RE261-3004-0006	. SEAL (Interchangeable with 12100CR6 MFD by 08199) (LC)	1	1	
-150	6	AN919-12S	. REDUCER (Supersedes AN814-12C) (LC)	1	1	
-151	5,6	RE127-2001-0006	. CLAMP	1	1	
		AN520C10R8	. SCREW (AP)	1	1	
		AN520C10R12	. SCREW (AP)	1	1	
		LD153-0010-0007	. WASHER (AP)	1	1	
		NAS43HT3-25	SPACER (AP)	1	1	
		NAS679C3W	. NUT (AP)	1	1	
-152	6	MS9104-50	. BRACKET	1	1	
		RD111-4009-0610	. BOLT (AP)	1	1	
		RD153-5002-0006	. WASHER (AP)	1	1	
		RD153-1002-0006	. WASHER (AP)	1	1	
		RD114-8005-1006	. NUT (AP)	1	1	
-153	6,8	410099	. TUBE ASSY, Manifold to tee, oxidizer overboard drain (LC)	1	1	
		AN818-8J	. . NUT (Replaces AN818-8C for all applications)	2	2	
		MS20819-8J	. . SLEEVE (Replaces MS20819-8C for all applications)	2	2	
		RD172-0001-0001	. . TAPE (ROCKET OXIDIZER)	AR	AR	
		RD172-0014-0027	. . TAPE (LIQUID OXYGEN)	AR	AR	
		RD172-0014-0039	. . TAPE (FLOW)	AR	AR	
		RD172-0014-0040	. . TAPE (DRAIN)	AR	AR	
		410099-3	. . TUBE, 321 CRES, 1/2 IN. OD by 0.049 gage	1	1	
-154	7	410082	. TUBE ASSY, Drain, oxidizer, overboard, tee to tee (LC)	1	1	
		AN818-8J	. . NUT (Replaces AN818-8C for all applications)	2	2	
		MS20819-8J	. . SLEEVE (Replaces MS20819-8C for all applications)	2	2	
		RD172-0001-0001	. . TAPE (ROCKET OXIDIZER)	AR	AR	
		RD172-0014-0027	. . TAPE (LIQUID OXYGEN)	AR	AR	
		410082-3	. . TUBE, 321 CRES, 1/2 IN. OD by 0.049 gage	1	1	
-155	8	AN824-8S	. TEE (Supersedes AN824-8C) (LC)	1	1	
-156	1,10	407791	MANIFOLD ASSY, Hypergol (LC)	REF	REF	
-157		DELETED				
-158	7	408845	TUBE ASSY, Fuel seal drain, primary (Primary fuel seal drain tube - NO. 2 side) (LC)	REF	REF	

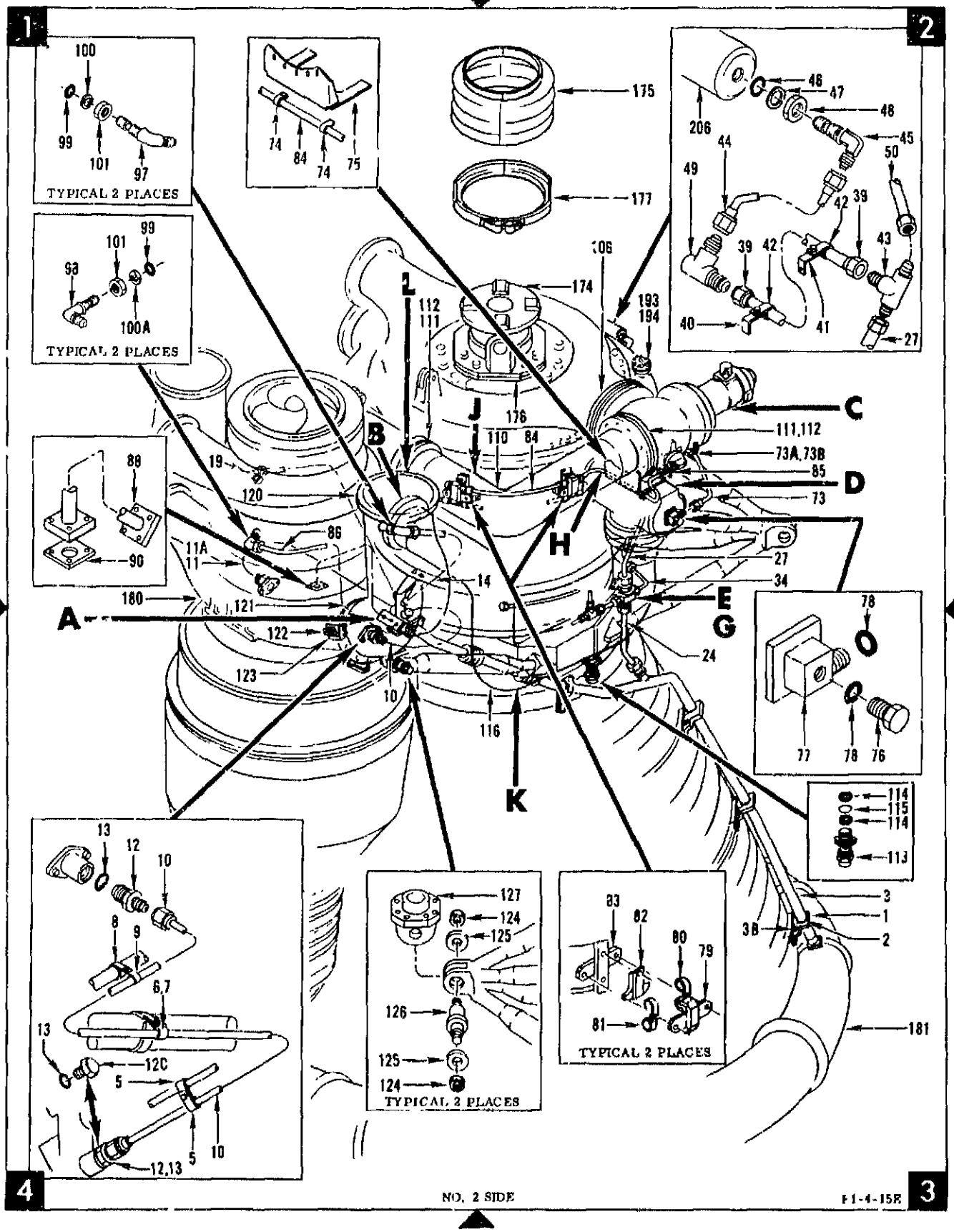

Figure 6. Propellant Feed System Installation — No. 2 Side (Sheet 1 of 4)

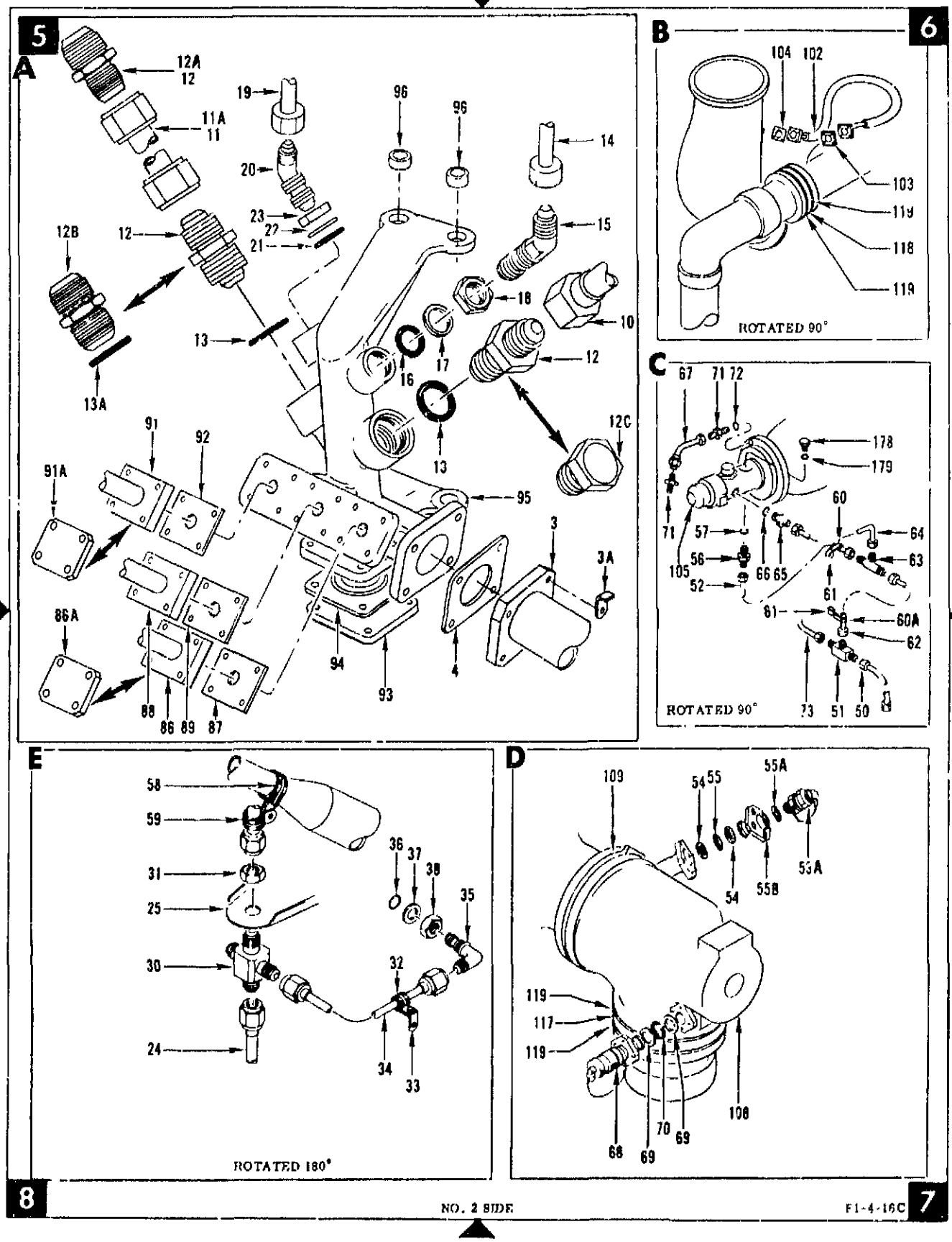

Figure 6. Propellant Feed System Installation – No. 2 Side (Sheet 2 of 4)

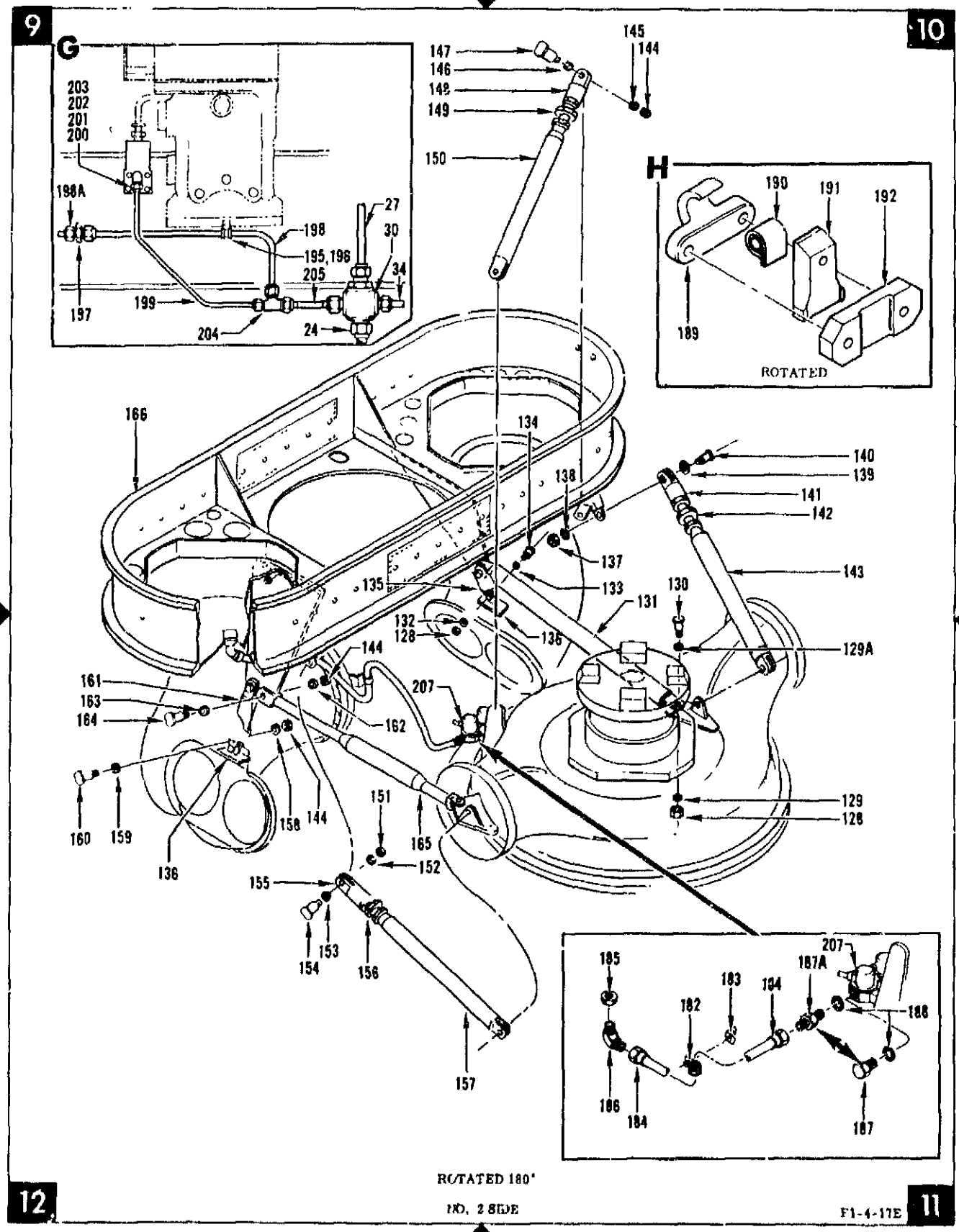

Figure 6. Propellant Feed System Installation -- No. 2 Side (Sheet 3 of 4)

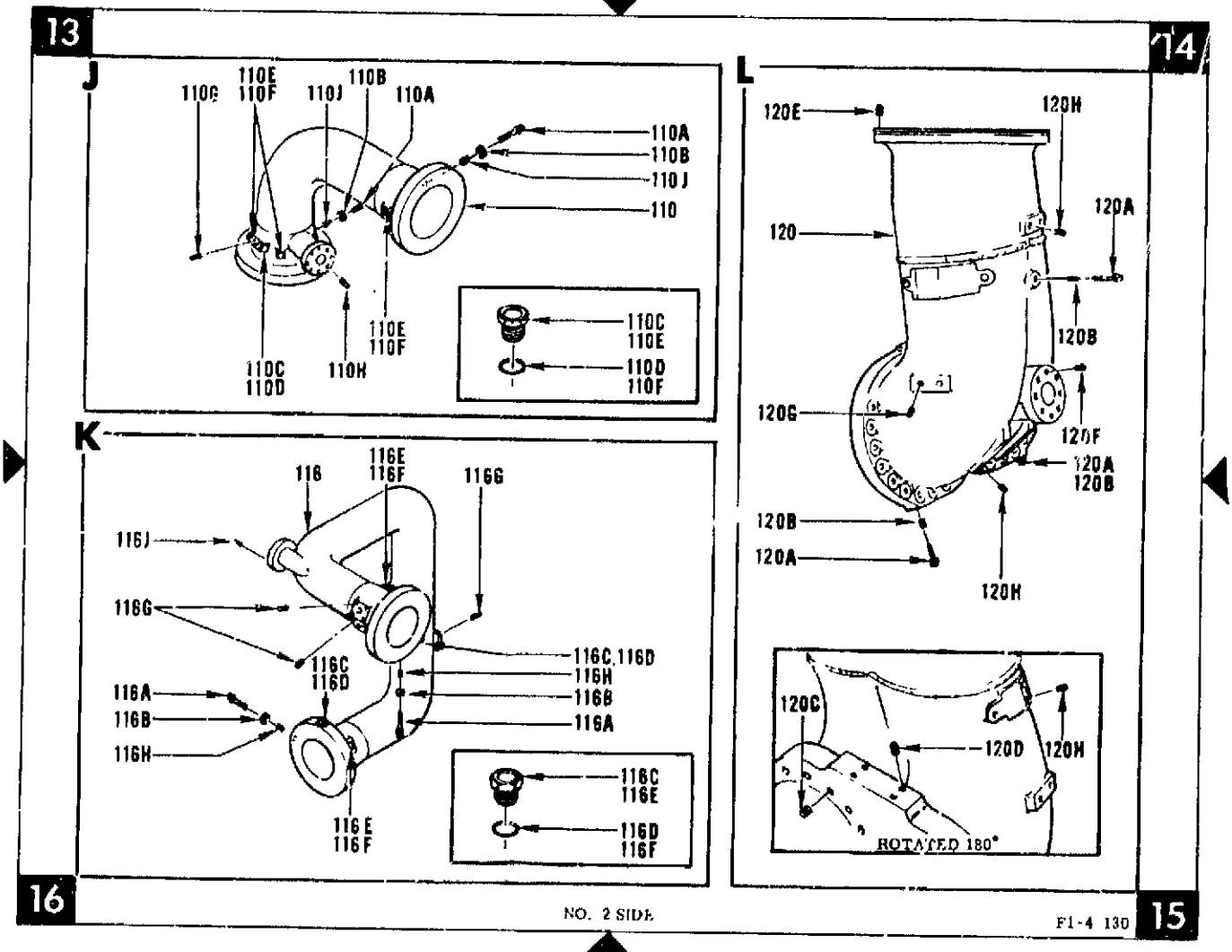

Figure 6. Propellant Feed System Installation — No. 2 Side (Sheet 4 of 4)

FIG & INDEX NO	ZONE NO	PART NUMBER	DESCRIPTION 1 2 3 4 5 6 7	UNITS PER ASSY		USABLE ON CODE
6-		407001	PROPELLANT FEED SYSTEM INSTL (NO. 2 side) (See figure 1, index 3, for REQMT)			
			(Propellant feed system INSTL, engine F-2029 THRU F-2042)	REF		
			(Propellant feed system INSTL, engine F-2043 THRU F-2098)		REF	
			PARTIAL BREAKDOWN FOLLOWS			
- 1	3	408231	. CLAMP, Overboard drain, fuel	4	4	
- 2	3	RE127-2002-0024	. CLAMP	4	4	
		RD111-1010-6416	. BOLT (AP)	2	2	
		RD153-1002-0004	. WASHER (AP)	2	2	
		RD153-5002-0004	. WASHER (AP)	2	2	
		NAS679C4W	. NUT (AP)	2	2	
- 3	3, 6	408243	. LINE ASSY, Overboard drain, fuel (Welded) (LC)	1	1	
		RD111-4010-0417	. BOLT (AP)	4	4	
		RD153-5002-0004	. WASHER (AP)	4	4	
- 3A	6	MS9102-14	. BRACKET	1	1	
- 3B	3	RE127-2002-0004	. CLAMP	4	4	
- 4	6	19-406392-33	. SEAL ASSY, Plate (LC)	1	1	
- 5	4	RE127-2001-0006	. CLAMP	2	2	
		AN520C10R12	. SCREW (AP)	1	1	

FIG & INDEX NO	ZONE NO	PART NUMBER	1 2 3 4 5 6 7 DESCRIPTION	UNITS PER ASSY		USABLE ON CODE
6-		NAS43HT3-16	. SPACER (AP)	1	1	
		LD153-0010-0007	. WASHER (AP)	1	1	
		NAS679C3W	. NUT (AP)	1	1	
- 6	4	MBS60407-250-01	. SUPPORT, Band (MFD by 98625)	2	2	
- 7	4	RE127 2001-0006	. CLAMP	2	2	
		LD153-0010-0007	. WASHER (AP)	1	1	
		NAS43HT3-16	. SPACER (AP)	1	1	
		NAS679C3W	. NUT (AP)	1	1	
- 8	4	RE127-2001 0012	. CLAMP	1	1	
- 9	4	RE127-2001-0006	. CLAMP	1	1	
		AN520C10R8	. SCREW (AP)	1	1	
		LD153-0010-0007	. WASHER (AP)	1	1	
		NAS679C3W	. NUT (AP)	1	1	
-10	4, 6	408835	. TUBE ASSY, Fuel inlet, seal drain, NO. 2 side (LC)	1	1	TJ
		AN818-8J	. . NUT (Replaces AN818-8C for all applications)	2	2	
		MS20819-8J	. . SLEEVE (Replaces MS20819-8C for all applications)	2	2	
		RD172-0002-0001	. . TAPE (ROCKET FUEL)	AR	AR	
		RD172-0014-0033	. . TAPE (RP-1)	AR	AR	
		RD172-0014-0040	. . TAPE (DRAIN)	AR	AR	
		408838-3	. . TUBE, 321 CRES, 1 2 IN. OD by 0.049 gage	1	1	
-11	1, 5	408837	. TUBE ASSY, Fuel inlet, seal drain, NO. 1 side (LC)	1	1	TJ
		AN818-8J	. . NUT (Replaces AN818-8C for all applications)	2	2	
		MS20819-8J	. . SLEEVE (Replaces MS20819-8C for all applications)	2	2	
		RD172-0014-0033	. . TAPE (RP-1)	AR	AR	
		RD172-0002-0001	. . TAPE (ROCKET FUEL)	AR	AR	
		RD172-0014-0040	. . TAPE (DRAIN)	AR	AR	
		408837-3	. . TUBE, 321 CRES, 1 2 IN. OD by 0.049 gage	1	1	
-11A	1, 5	410807	. TUBE ASSY, Fuel inlet seal drain, NO. 1 side (LC)		1	FAA
		AN818-6J	. . NUT (Replaces AN818-6C for all applications)		2	
		MS20819-6J	. . SLEEVE (Replaces MS20819-6C for all applications)		2	
		RD172-0002-0001	. . TAPE (ROCKET FUEL)		AR	
		RD172-0014-0033	. . TAPE (RP-1)		AR	
		RD172-0014-0040	. . TAPE (DRAIN)		AR	
		410807-3	. . TUBE, 321 CRES, 3 8 IN. OD by 0.035 gage		1	
-12	4, 5, 6	AN919-19J	. REDUCER (Supersedes AN919-19C) (LC)	4	4	TJ
-12A	5	AN815-6J	. UNION (Supersedes AN815-6C) (LC)		1	FAA
-12B	5	AN919-18J	. REDUCER (Supersedes AN919-18C) (LC)		1	FAA
-12C	4, 6	AN814-12JL	. PLUG AND BLEEDER (Supersedes AN814-12CL) (LC)		1	FAA
-13	4, 5	RD262-3001-0012	. GASKET (LC)	4	4	TJ
-13A	5	RD262-3001-0006	. GASKET (LC)		1	FAA
-14	2, 6	410086	. TUBE ASSY, Drain, primary fuel seal, inboard (Primary fuel seal drain - NO. 2 side) (LC)	1	1	
		AN818-8J	. . NUT (Replaces AN818-8C for all applications)	2	2	
		MS20819-8J	. . SLEEVE (Replaces MS20819-8C for all applications)	2	2	
		RD172-0014-0033	. . TAPE (RP-1)	AR	AR	
		RD172-0002-0001	. . TAPE (ROCKET FUEL)	AR	AR	
		RD172-0014-0040	. . TAPE (DRAIN)	AR	AR	
		410086-3	. . TUBE, 321 CRES, 1 2 IN. OD by 0.042 gage	1	1	
-15	6	AN837-8J	. ELBOW (Supersedes AN837-8C) (LC)	1	1	
-16	5	RD262-3001-0008	. GASKET (LC)	1	1	
-17	5	RD262-1002-0008	. RING (LC)	1	1	
-18	6	RD114-1003-1008	. NUT (LC)	1	1	
-19	1, 5	408845	. TUBE ASSY, Fuel seal drain, primary (Primary fuel seal drain tube - NO. 1 side) (LC)	1	1	
		AN818-8J	. . NUT (Replaces AN818-8C for all applications)	2	2	
		MS20819-8J	. . SLEEVE (Replaces MS20819-8C for all applications)	2	2	
		RD172-0014-0033	. . TAPE (RP-1)	AR	AR	
		RD172-0002-0001	. . TAPE (ROCKET FUEL)	AR	AR	
		RD172-0014-0040	. . TAPE (DRAIN)	AR	AR	
		408845-3	. . TUBE, 321 CRES, 1 2 IN. OD by 0.032 gage	1	1	
-20	5	AN837-8S	. ELBOW (Supersedes AN837-8C) (LC)	1	1	
-21	5	RD262-3001-0008	. GASKET (LC)	1	1	
-22	5	RD262-1002-0008	. RING (LC)	1	1	
-23	5	RD114-1003-1008	. NUT (LC)	1	1	
-24	8	408306	. TUBE ASSY, Cross to lateral, fuel overboard drain (LC)	1	1	
		AN818-16J	. . NUT (Replaces AN818-16C for all applications)	2	2	
		MS20819-16J	. . SLEEVE (Replaces MS20819-16C for all applications)	2	2	
		RD172-0002-0001	. . TAPE (ROCKET FUEL)	AR	AR	
		RD172-0014-0033	. . TAPE (RP-1)	AR	AR	
		RD172-0014-0040	. . TAPE (DRAIN)	AR	AR	
		408306-3	. . TUBE, 321 CRES, 1 IN. OD by 0.065 gage	1	1	
-25	8	408305	. BRACKET, Support, fuel drain	1	1	
		RD111-4009-0610	. BOLT (AP)	2	2	
		RD153-5002-0006	. WASHER (AP)	2	2	
		RD153-1002-0006	. WASHER (AP)	2	2	
		RD114-8005-1006	. NUT (AP)	2	2	
-26		DELETED				

FIG & INDEX NO	ZONE NO	PART NUMBER	DESCRIPTION 1 2 3 4 5 6 7	UNITS PER ASSY		USABLE ON CODE
6-27	2	408312	. TUBE ASSY, Tee to cross, fuel overboard drain (LC)	1	1	
		AN818-12J	. . NUT (Replaces MS20819-12C for all applications)	2	2	
		MS20819-12J	. . SLEEVE (Replaces MS20819-12C for all applications)	2	2	
		RD172-0002-0001	. . TAPE (ROCKET FUEL)	AR	AR	
		RD172-0014-0033	. . TAPE (RP-1)	AR	AR	
		RD172-0014-0040	. . TAPE (DRAIN)	AR	AR	
		408312-3	. . TUBE, 321 CRES, 3/4 IN. OD by 0.049 gage	1	1	
-28		DELETED				
-29		DELETED				
-30	8, 9	RE273-4001-0001	. CROSS (LC)	1	1	
-31	8	AN924-12S	. NUT (Supersedes AN924-12C) (LC)	1	1	
-32	8	RE127-2001-0004	. CLAMP	1	1	
		AN520C10R10	. SCREW (AP)	1	1	
		LD153-0010-0007	. WASHER (AP)	1	1	
		NAS679C3W	. NUT (AP)	1	1	
-33	8	MS9104-16	. BRACKET	1	1	
		NAS1006-7A	. BOLT (AP)	1	1	
		RD153-1002-0006	. WASHER (AP)	1	1	
		RD153-5002-0006	. WASHER (AP)	1	1	
		NAS679C6	. NUT (AP)	1	1	
-34	8	408836	. TUBE ASSY, Selector valve, actuator vent to cross, fuel overboard drain (Checkout valve actuator vent tube) (LC)	1	1	
		AN818-6J	. . NUT (Replaces AN818-6C for all applications)	2	2	
		MS20819-6J	. . SLEEVE (Replaces MS20819-6C for all applications)	2	2	
		RD172-0002-0001	. . TAPE (ROCKET FUEL)	AR	AR	
		RD172-0014-0033	. . TAPE (RP-1)	AR	AR	
		RD172-0014-0040	. . TAPE (DRAIN)	AR	AR	
		408836-3	. TUBE, 321 CRES, 3/8 IN. OD by 0.035 gage	1	1	
-35	8	RE273-5002-0001	. ELBOW (LC)	1	1	
-36	8	RD262-3001-0004	. GASKET (LC)	1	1	
-37	8	RD262-1002-0004	. RING (LC)	1	1	
-38	8	RD114-1003-1004	. NUT (LC)	1	1	
-39	2	408338	. TUBE ASSY, Igniter fuel valve tee to tee, fuel overboard drain (LC)	1	1	
		AN818-10J	. . NUT (Replaces AN818-10C for all applications)	2	2	
		MS20819-10J	. . SLEEVE (Replaces MS20819-10C for all applications)	2	2	
		RD172-0014-0039	. . TAPE (FLOW)	AR	AR	
		RD172-0002-0001	. . TAPE (ROCKET FUEL)	AR	AR	
		RD172-0014-0033	. . TAPE (RP-1)	AR	AR	
		RD172-0014-0040	. . TAPE (DRAIN)	AR	AR	
		408338-3	. . TUBE, 321 CRES, 5/8 IN. OD by 0.049 gage by 31.00 IN. LG	1	1	
-40	2	MS9103-14	. BRACKET	1	1	
-41	2	MS9103-24	. BRACKET	1	1	
		RD111-4010-0506	. BOLT (AP)	1	1	
		RD153-5002-0005	. WASHER (AP)	1	1	
-42	2	RE127-2001-0008	. CLAMP	2	2	
		AN520C10R8	. SCREW (AP)	1	1	
		AN520C10R11	. SCREW (AP)		1	
		AN520C10R17	. SCREW (AP)		1	
		AN520C10R14	. SCREW (AP)	1	1	
		LD153-0010-0007	. WASHER (AP)	1	1	
		NAS43HT3-21	. SPACER (AP)	1	1	
		NAS679C3W	. NUT (AP)	1	1	
-43	2	RE273-4004-0003	. TEE (LC)	1	1	
-44	2	408333	. TUBE ASSY, Igniter fuel valve vent, overboard drain (Igniter fuel valve vent tube) (LC)	1	1	
		AN818-6J	. . NUT (Replaces AN818-6C for all applications)	2	2	
		MS20819-6J	. . SLEEVE (Replaces MS20819-6C for all applications)	2	2	
		RD172-0002-0001	. . TAPE (ROCKET FUEL)	AR	AR	
		RD172-0014-0033	. . TAPE (RP-1)	AR	AR	
		RD172-0014-0040	. . TAPE (DRAIN)	AR	AR	
		RD172-0014-0039	. . TAPE (FLOW)	AR	AR	
		408333-3	. . TUBE, 321 CRES, 3/8 IN. OD by 0.035 gage	1		
-45	2	AN833-6S	. ELBOW (Supersedes AN833-6C) (LC)	1	1	
-46	2	RD262-3001-0006	. GASKET (LC)	1	1	
-47	2	RD262-1002-0006	. RING (LC)	1	1	
-48	2	RD114-1003-1006	. NUT (LC)	1	1	
-49	2	RE273-4003-0002	. TEE (LC)	1	1	
-50	2, 7	408339	. TUBE ASSY, Tee to tee, fuel overboard drain (Fuel overboard drain tube - NO. 2 side) (LC)	1	1	
		AN818-8J	. . NUT (Replaces AN818-8C for all applications)	2	2	
		MS20819-8J	. . SLEEVE (Replaces MS20819-8C for all applications)	2	2	
		RD172-0014-0039	. . TAPE (FLOW)	AR	AR	
		RD172-0002-0001	. . TAPE (ROCKET FUEL)	AR	AR	
		RD172-0014-0033	. . TAPE (RP-1)	AR	AR	
		RD172-0014-0040	. . TAPE (DRAIN)	AR	AR	
		408339-3	. . TUBE, 321 CRES, 1/2 IN. OD by 0.049 gage by 13.00 IN. LG	1	1	

FIG & INDEX NO	ZONE NO	PART NUMBER	DESCRIPTION 1 2 3 4 5 6 7	UNITS PER ASSY		USABLE ON CODE
6-51	7	RE273-4004-0004	. TEE (LC)	1	1	
-52	6	408340	. TUBE ASSY, Main oxidizer valve, NO. 2 shaft seal fuel drain (NO. 2 oxidizer valve shaft seal fuel drain tube) (LC)	1	1	
		AN818-4J	. . NUT (Replaces AN818-4C for all applications)	2	2	
		MS20819-4J	. . SLEEVE (Replaces MS20819-4C for all applications)	2	2	
		RD172-0002-0001	. . TAPE (ROCKET FUEL)	AR	AR	
		RD172-0014-0033	. . TAPE (RP-1)	AR	AR	
		RD172-0014-0040	. . TAPE (DRAIN)	AR	AR	
		RD172-0014-0039	. . TAPE (FLOW)	AR	AR	
		408340-3	. . TUBE, 321 CRES, 1/4 IN. OD by 0.028 gage	1	1	
-53		DELETED				
-53A	7	NA5-260079T1	. COUPLING ASSY, High temperature, flight half (NO. 2 fuel inlet manifold drain quick-disconnect) (LC)	1	1	
		RD111-4008-0508	. BOLT (AP)	4	4	
		RD153-5002-0005	. WASHER (AP)	4	4	
-54	7	MS28774-121	. RETAINER (LC)	2	2	
-55	7	RD262-4006-0121	. PACKING (LC)	1	1	
-55A	7	RD262-3001-0006	. GASKET (LC)		1	
-55B	7	410831	. ADAPTER, Port, fuel drain (LC)		1	
-56	6	AN815-4S	. UNION (Supersedes AN815-4C) (LC)	1	1	
-57	6	RE261-3004-0004	. SEAL (Interchangeable with 1210°CR4 MFD by 08199) (LC)	1	1	
-58	8	RE127-2001-0026	. CLAMP	1	1	
-59	8	RE127-2001-0010	. CLAMP	1	1	
		AN520C10R8	. SCREW (AP)	1	1	
		LD153-0010-0007	. WASHER (AP)	1	1	
		NAS679C3W	. NUT (AP)	1	1	
-60	6	RE127-2001-0002	. CLAMP	1	1	
-60A	7	RE127-2001-0004	. CLAMP	1	1	
-61	6	RE127-2001-0006	. CLAMP	2	2	
		AN520C10R8	. SCREW (AP)	1	1	
		LD153-0010-0007	. WASHER (AP)	1	1	
		NAS679C3W	. NUT (AP)	1	1	
-62	7	408348	. TUBE ASSY, Drain, main oxidizer valve NO. 2, tee to tee overboard drain (NO. 2 oxidizer valve fuel overboard drain tube) (LC)	1	1	
		AN818-6J	. . NUT (Replaces AN818-6C for all applications)	2	2	
		MS20819-6J	. . SLEEVE (Replaces MS20819-6C for all applications)	2	2	
		RD172-0002-0001	. . TAPE (ROCKET FUEL)	AR	AR	
		RD172-0014-0033	. . TAPE (RP-1)	AR	AR	
		RD172-0014-0039	. . TAPE (FLOW)	AR	AR	
		408348-3	. . TUBE, 321 CRES, 3/8 IN. OD by 0.035 gage by 14.00 IN. LG	1	1	
-63	6	RE273-4004-0001	. TEE (LC)	1	1	
-64	6	408241-11	. TUBE ASSY, Main oxidizer valve, NO. 2 actuator seal, fuel drain (NO. 2 oxidizer valve actuator fuel seal drain tube) (See figure 19 for detailed installation) (LC)		1	
		AN818-4J	. . NUT (Replaces AN818-4C for all applications)	2	2	
		MS20819-4J	. . SLEEVE (Replaces MS20819-4C for all applications)	2	2	
		RD172-0002-0001	. . TAPE (ROCKET FUEL)	AR	AR	
		RD172-0014-0033	. . TAPE (RP-1)	AR	AR	
		RD172-0014-0040	. . TAPE (DRAIN)	AR	AR	
		RD172-0014-0039	. . TAPE (FLOW)	AR	AR	
		409341-5	. . TUBE, 321 CRES, 1/4 IN. OD by 0.023 gage	1	1	
-65	6	AN815-4S	. UNION (Supersedes AN815-4C) (LC)	1	1	
-66	6	RE261-3004-0004	. SEAL (Interchangeable with 1210°CR4 MFD by 08199) (LC)	1	1	
		RE127-2001-0002	. CLAMP	1	1	
		RE127-2001-0008	. CLAMP	1	1	
		AN520C10R24	. SCREW (AP)	1	1	
		LD153-0010-0007	. WASHER (AP)	1	1	
		NAS43BT3-64	. SPACER (AP)	1	1	
		NAS679C3W	. NUT (AP)	1	1	
		RE127-2001-0002	. CLAMP	2	2	
		RE127-2001-0008	. CLAMP	1	1	
		RD111-4010-6408	. BOLT (AP)	1	1	
		AN520C10R8	. SCREW (AP)	1	1	
		RD153-5002-0004	. WASHER (AP)	1	1	
		LD153-0010-0007	. WASHER (AP)	1	1	
		NAS679C3W	. NUT (AP)	1	1	
		MS9102-01	. BRACKET	1	1	
-67	6	408248-11	. TUBE ASSY, Main oxidizer valve, NO. 2 actuator rod seal vent (NO. 2 oxidizer valve actuator rod seal vent tube) (See figure 20, index 256, for detailed installation) (LC)			
		AN818-4J	. . NUT (Replaces AN818-4C for all applications)	2	2	
		MS20819-4J	. . SLEEVE (Replaces MS20819-4C for all applications)	2	2	
		RD172-0001-0001	. . TAPE (ROCKET FUEL)	AR	AR	
		RD172-0014-0027	. . TAPE (LIQUID OXYGEN)	AR	AR	
		408248-5	. . TUBE, 321 CRES, 1/4 IN. OD by 0.028 gage	1	1	
-68	7	NA5-260078T1	. COUPLING ASSY, High temperature, flight half (NO. 2 fuel valve purge quick disconnect) (LC)	1	1	
		RD111-4008-0406	. BOLT (AP)	4	4	
		RD153-5002-0004	. WASHER (AP)	4	4	
-69	7	MS28774-018	. RETAINER (LC)	2	2	

FIG & INDEX NO	TOOL NO	PART NUMBER	1 2 3 4 5 6 7 DESCRIPTION	UNITS PER ASSY		USABLE ON CODE
6-70	7	RD262-1006-0018	. PACKING (LC)	1	1	
-71	6	AN815-4S	. UNION (Supersedes AN815-4C) (LC)	2	2	
-72	5	RE261-3004-0004	. SEAL (Interchangeable with 12100CR4 MFD by 08199) (LC)	1	1	
-73	2,7	409215	. TUBE ASSY, Main fuel valve NO. 2, potentiometer, vent drain (NO. 2 fuel valve vent tube) (LC)	1	1	
		AN818-4J	. . NUT (Replaces AN818-4C for all applications)	2	2	
		MS20819-4J	. . SLEEVE (Replaces MS20819-4C for all applications)	2	2	
		RD172-0014-0040	. . TAPE (DRAIN)	AR	AR	
		RD172-0002-0001	. . TAPE (ROCKET FUEL)	AR	AR	
		RD172-0014-0033	. . TAPE (RP-1)	AR	AR	
		RD172-0014-0059	. . TAPE (FLOW)	AR	AR	
		409215-3	. . TUBE, 321 CRES, 1/4 IN. OD by 0.028 gage	1	1	
-73A	2	RE127-2001-0002	. CLAMP	1	1	
		AN520C10R6	. SCREW (AP)	1	1	
		RD153-5002-0004	. WASHER (AP)	1	1	
		LD153-0010-0007	. WASHER (AP)	1	1	
		NAS679C3W	. NUT (AP)	1	1	
-73B	2	MS9102-01	. BRACKET	1	1	
		RD111-4010-6408	. BOLT (AP)	1	1	
		RD153-5002-0004	. WASHER (AP)	1	1	
-74	1	RE127-2001-0006	. CLAMP	2	2	
		AN520C10R6	. SCREW (AP)	1	1	
		LD153-0010-0007	. WASHER (AP)	1	1	
		NAS679C3W	. NUT (AP)	1	1	
-75	1	703036-1	. BRACKET, Harness support main valve potentiometer	1	1	
		RD111-1009-3508	. BOLT (AP)	5	5	
		LD153-0013-0003	. WASHER (AP)	5	5	
-76	3	500103C4	. BOLT (MFD by 08199) (LC)	1	1	
-77	3	500101C4	. ELBOW (MFD by 08199) (LC)	1	1	
-78	2,3	RE261-3004-1004	. SEAL (Interchangeable with 12100AA4 MFD by 08199) (LC)	2	2	
-79	3	409242	. CLAMP, Tube support, purge and drain lines, NO. 2 main oxidizer valve	2	2	
-80	3	RE127-2002-0006	. CLAMP	1	4	
-81	3	RE127-2002-0002	. CLAMP	4	4	
		RD111-4010-6420	. BOLT (AP)	2	2	
		RD153-5002-0004	. WASHER (AP)	2	2	
-82	3	601732	. SUPPORT, Tube, dual hydraulic control lines	2	2	
-83	3	601734	. NUTPLATE ASSY, Tube support, hydraulic control lines	2	2	
		NAS1102C3-12	. SCREW (AP)	2	2	
-84	1,2	407011	. LINE ASSY, Dome purge, NO. 2 main oxidizer valve (Welded) (NO. 2 oxidizer dome purge line) (LC)	1	1	
		RD111-1009-0417	. BOLT (AP)	4	4	
		LD153-0013-0002	. WASHER (AP)	4	4	
		RD172-0001-0001	. . TAPE (ROCKET FUEL)	AR	AR	
		RD172-0007-0012	. . TAPE (NITROGEN OXIDIZER PURGE)	AR	AR	
		RD172-0014-0039	. . TAPE (FLOW)	AR	AR	
		RD172-0018-1750	. . TAPE (1750 PSI)	AR	AR	
-85	2	RD251-4082-0431	. ORIFICE PLATE (NO. 2 oxidizer dome purge orifice) (LC)	1	1	
-86	1,8	410087	. TUBE ASSY, Drain, bearing lubrication, outboard (NO. 1 bearing lube drain tube) (Welded) (LC)	1	1	AHM
		RD111-4010-0417	. BOLT (Intfc-fuel drain manifold) (AP)	4	4	
		RD153-5002-0004	. WASHER (Intfc-fuel drain manifold) (AP)	4	4	
		RD172-0005-0001	. . TAPE (LUBRICATION)	AR	AR	
		RD172-0014-0040	. . TAPE (DRAIN)	AR	AR	
		RD172-0014-0033	. . TAPE (RP-1)	AR	AR	
		RD172-0018-0050	. . TAPE (50 PSI)	AR	AR	
-86A	3	409741	. PLATE, Cover, fuel drain manifold (LC)		1	FAA
		RD111-4010-0408	. BOLT (AP)		4	
		RD153-5002-0004	. WASHER (AP)		4	
-87	8	19-406332-25	. SEAL ASSY, Plate (LC)	1	1	
		RE127-2001-0006	. CLAMP	1	1	
		RE127-2001-0012	. CLAMP	1	1	
		AN520C10R6	. SCREW (AP)	1	1	
		LD153-0010-0007	. WASHER (AP)	1	1	
		NAS679C3W	. NUT (AP)	1	1	
-88	1,8	408848	. HOSE ASSY, Drain, turbine bearing lube (Welded) (LC)	1	1	
		RD111-4010-0420	. BOLT (Intfc-turbine flange) (AP)	4	4	
		RD111-4010-0417	. BOLT (Intfc-fuel drain manifold) (AP)	4	4	
		RD153-5002-0004	. WASHER (Intfc-turbine flange and fuel drain manifold) (AP)	8	8	
		RD172-0005-0001	. . TAPE (LUBRICATION)	AR	AR	
		RD172-0014-0040	. . TAPE (DRAIN)	AR	AR	
		RD172-0018-0033	. . TAPE (RP-1)	AR	AR	
		RD172-0018-0050	. . TAPE (50 PSI)	AR	AR	
		RD172-0014-0039	. . TAPE (FLOW)	AR	AR	
-89	8	19-406332-25	. SEAL ASSY, Plate (LC)	1	1	

FIG & INDEX NO	ZONE NO	PART NUMBER	DESCRIPTION 1 2 3 4 5 6 7	UNITS PER ASSY		USABLE ON CODE
6- 90	1	19-406332-23	. SEAL ASSY, Plate (LC)	1	1	
- 91	5	408236	. LINE ASSY, Bearing lube drain, inboard (NO. 2 bearing lube drain line) (Welded) (LC)	1	1	AHM
		RD111-4010-0417	. BOLT (Intfc-fuel drain manifold) (AP)	4	4	
		RD153-5002-0004	. WASHER (Intfc-fuel drain manifold) (AP)	4	4	
- 91A	5	408741	. PLATE, Cover, fuel drain manifold (LC)		1	FAA
		RD111-4010-0408	. BOLT (AP)		4	
		RD153-5002-0004	. WASHER (AP)		4	
- 92	5	19-406332-25	. SEAL ASSY, Plate (LC)	1	1	
- 93	8	408273	. PLATE, Cover, fuel drain manifold (LC)	1	1	
		RD111-4008-3406	. BOLT (AP)	4	1	
		RD153-5002-0004	. WASHER (AP)	4	1	
- 94	8	19-406332-33	. SEAL ASSY, Plate (LC)	1	1	
- 95	6	407474	. MANIFOLD, Fuel drain (LC)	1	1	
		RD111-4009-0614	. BOLT (AP)	2	2	
		RD111-4009-0612	. BOLT (AP)	2	2	
		RD153-5002-0006	. WASHER (AP)	4	4	
		RD153-5002-0006	. WASHER (AP)	4	4	
		RD114-8005-1006	. NUT (AP)	4	4	
- 96	5	601922-5	. BUSHING, Support, 4-way valve, hydraulic control system	2	2	
- 97	1	AN833-8S	. ELBOW (Supersedes AN833-8C) (LC)	2	2	
- 98	1	RF273-5002-0002	. ELBOW (LC)	1	1	
- 9	1	RD262-3001-0008	. GASKET (LC)	3	3	
-100	1	RD262-1002-0009	. RING (LC)	2	2	
-100A	1	RD262-1002-0008	. RING (LC)	1	1	
-101	1	RD114-1003-1008	. NUT (LC)	3	3	
-102	6	408252	. HOSE ASSY, Flexible NO. 2 fuel bleed line (Turbopump fuel bleed hose) (Welded) (LC)	1	1	
		RD111-1009-3416	. BOLT (AP)	8	8	
		RD153-5002-0004	. WASHER (AP)	8	8	
-103	5	RD251-4030-XXXX	. ORIFICE PLATE (Orifice size determined by calibration tests) (Turbopump fuel bleed orifice) (LC)	1	1	
-104	6	19-406332-23	. SEAL ASSY, Plate (LC)	1	1	
		RE127-2001-0006	. CLAMP	7	7	
		RE127-2001-0033	. CLAMP	1	1	
		RE127-2001-0005	. CLAMP	1	1	
		RE127-2001-0016	. CLAMP	1	1	
		AN520C10R8	. SCREW (AP)	1	1	
		AN520C10R15	. SCREW (AP)	1	1	
		LD153-0010-3007	. WASHER (AP)	1	1	
		NAS43HT3-32	. SPACER (AP)	1	1	
		NAS43HT5-64	. SPACER (AP)	1	1	
		NAS679C3W	. NUT (AP)	1	1	
-105	6	409465-21	. VALVE ASSY, Oxidizer (See figure 15 for breakdown) (NO. 2 oxidizer valve) (J71) (LC)	1	1	FTB
-105	6	409465-11	. VALVE ASSY, Oxidizer (See figure 15 for breakdown) (NO. 2 oxidizer valve) (J71) (LC)		1	FTC
-105	6	409465-31	. VALVE ASSY, Oxidizer (See figure 15 for breakdown) (NO. 2 oxidizer valve) (J71) (LC)		1	FCA
		RD111-4012-4021	. BOLT (AP)	24	24	
		RD153-5002-0010	. WASHER (AP)	24	24	
-106	2	306070-15	. SEAL, Pressure-actuated (LC)	1	1	
-107		DELETED				
-108	7	410910-11	. VALVE ASSY, Fuel (NO. 2 fuel valve) (See figure 19 for breakdown) (J77) (LC)	1	1	FTA
		RD111-4012-4022	. BOLT (AP)	20	20	
		RD153-5002-0010	. WASHER (AP)	20	20	
-109	7	RD251-4100-XXXX	. ORIFICE PLATE (NO. 2 main fuel orifice) (Orifice size determined by calibration tests) (LC)	1	1	
		502979	. BRACKET ASSY, Harness, discharge flange, LOX pump, NO. 2	1	1	
-110	2, 14	408816	. DUCT ASSY, Oxidizer, high pressure, NO. 2 (Welded) (LC)	1	1	
		RD111-4016-1060	. BOLT (Intfc-NO. 2 oxidizer valve) (AP)	24	24	
		RD111-4016-1092	. BOLT (Intfc-NO. 2 LOX turbopump volute) (AP)	22	22	
		409203	. WASHER, 5/8 bolt (Intfc-NO. 2 oxidizer valve) (AP)	48	48	
		409203	. WASHER, 5/8 bolt (Intfc-NO. 2 LOX turbopump volute) (AP)	22	22	AHL
		408810	. WASHER, Ball seat (Intfc-NO. 2 oxidizer valve) (AP)	24	24	
		408810	. WASHER, Ball seat (Intfc-NO. 2 LOX turbopump volute) (AP)	22	22	
		406809	. WASHER, Ball socket (Intfc-NO. 2 oxidizer valve) (AP)	24	24	
		406809	. WASHER, Ball socket (Intfc-NO. 2 LOX turbopump volute) (AP)	22	22	
		408760	. WASHER, 5/8 nut (Intfc-NO. 2 LOX turbopump volute) (AP)	22	22	ESA
		RD114-8005-2010	. NUT (Intfc-NO. 2 LOX turbopump volute) (AP)	20	20	
-110A	13, 14	RD111-9001-0616	. . BOLT (LC)	2	2	
-110B	13, 14	RD153-0113-0082	. . WASHER (LC)	2	2	
-110C	13, 14	AN814-2S1	. . PLUG AND BLEEDER (Supersedes AN814-2C1) (LC)	1	1	

FIG & INDEX NO	ZONE NO	PART NUMBER	1 2 3 4 5 6 7 DESCRIPTION	UNITS PER ASSY		USABLE ON CODE
6-110D	13, 14	RE261-3004-0002	. . SEAL (Interchangeable with 12100CR2 MFD by 08199) (LC)	1	1	
-110E	13, 14	AN814-4JL	. . PLUG AND BLEEDER (Supersedes AN814-4CL) (Taps PO2b-2, PO2c-2, PO3-2) (LC)	3	3	
-110F	13, 14	RE261-3004-0004	. . SEAL (Interchangeable with 12100CR4 MFD by 08199) (LC)	3	3	
-110G	13	KN428TSP	. . INSERT (MFD by 29372) (LC)	4	4	
-110H	13	KNH524T13SP	. . INSERT (MFD by 29372) (LC)	8	8	
-110J	13, 14	KNH624TSP	. . INSERT (MFD by 29372) (LC)	2	2	
-111	1, 2	306070-15	. SEAL, Pressure-actuated (LC)	4	4	
-112	1, 2	408805	. SPACER ASSY, Rigid duct, oxidizer (LC)	2	2	AHL
-112	1, 2	410837	. SPACER, Oxidizer duct, rigid (Use -3 THRU -9, -13 THRU -19, -23 THRU -29, -33 and -35 as required where applicable) (LC)		2	ESA
-113	3	NA3-260079T2	. COUPLING ASSY, High temperature, flight half (NO. 2 fuel high-pressure duct drain quick-disconnect) (LC)	1	1	
		RD111-4008-6406	. BOLT (AP)	4	4	
		RD153-5002-0004	. WASHER (AP)	4	4	
-114	3	MS26774-018	. RETAINER (LC)	2	2	
-115	3	RD262-4006-0018	. PACKING (LC)	1	1	
-116	3	408818	. DUCT ASSY, Fuel NO. 2, high pressure (LC)	1	1	
		RD111-4016-1056	. BOLT (Intfc-NO. 2 fuel valve) (AP)	20	20	
		RD111-4012-4032	. BOLT (Intfc-NO. 2 fuel turbopump volute) (AP)	20	20	
		RD111-4016-1036	. BOLT (Intfc-NO. 2 high pressure fuel duct) (AP)	20	20	
		408810	. WASHER, Ball seat (Intfc-NO. 2 fuel valve) (AP)	20	20	
		408809	. WASHER, Ball socket (Intfc-NO. 2 fuel valve) (AP)	20	20	
		409203	. WASHER, 5/8 bolt (Intfc-NO. 2 fuel turbopump volute) (AP)	20	20	
		409203	. WASHER, 5/8 bolt (Intfc-NO. 2 high pressure fuel duct) (AP)	20	20	
-116A	16	RD111-9001-0020	. . BOLT (LC)	2	2	
-116B	16	RD153-0113-0082	. . WASHER (LC)	2	2	
-116C	15, 16	MS9015-02	. . PLUG (LC)	2	2	
-116D	15, 16	MS20512-02	. . PACKING (LC)	2	2	
-116E	13, 15, 16	AN814-4JL	. . PLUG AND BLEEDER (Supersedes AN814-4CL) (Taps PF2b-2, PF2c-2, PF3-2) (LC)	3	3	
-116F	15, 16	MS20512-04	. . PACKING (LC)	3	3	
-116G	16	KN428TSP	. . INSERT (MFD by 29372) (LC)	16	16	
-116H	16	KN624TSP	. . INSERT (MFD by 29372) (LC)	2	2	
-116J	16	KNH624TSP	. . INSERT (MFD by 29372) (LC)	8	8	
-117	7	408808	. SPACER ASSY, Rigid duct, fuel (LC)	1	1	AHL
-117	7	410836	. SPACER, Fuel duct, rigid (Use -3, -5, and -7 as required where applicable) (LC)		1	ESA
-118	6	408825	. SPACER ASSY, Fuel duct, rigid, volute (LC)	1	1	AHL
-118	6	410835	. SPACER, Rigid, fuel volute duct (Use -11, -21, -31, and -41 as required where applicable) (LC)		1	ESA
-119	6, 7	19-406333	. SEAL ASSY, Plate, dual type (LC)	4	4	
-120	1, 14	404912	. ELBOW ASSY, Fuel inlet, NO. 2 (Welded) (LC)	1		
-120	1, 14	404920	. ELBOW ASSY, Fuel inlet, NO. 2 (Welded) (LC)		1	CZE
-120	1, 14	404920-11	. ELBOW ASSY, Fuel inlet, NO. 2 (Welded) (LC)		1	FBA
		RD111-4013-3744	. BOLT (AP)	18	18	
		RD111-4012-3724	. BOLT (AP)	18	18	
		RD153-5003-0007	. WASHER (AP)	54	54	
		RD114-8005-2007	. NUT (AP)	18	18	
-120A	14, 15	RD111-9001-0018	. . BOLT (LC)		3	
-120B	14, 15	KN624SP	. . INSERT (MFD by 29372) (LC)		3	
-120C	15	KNH720T13SP	. . INSERT (MFD by 29372) (LC)		13	
-120D	15	KNH720-10SP	. . INSERT (MFD by 29372) (LC)		4	
-120E	14	KNH524-9SP	. . INSERT (MFD by 29372) (LC)		40	
-120F	14	KNH524SP	. . INSERT (MFD by 29372) (LC)		8	
-120G	14	KN428-4SP	. . INSERT (MFD by 29372) (LC)		2	
-120H	14, 15	KN428SP	. . INSERT (MFD by 29372) (LC)		10	
		AN814-4S	. PLUG AND BLEEDER (Used on 404912) (Supersedes AN814-4C) (Taps KF6b-2, KF7a-2) (LC)	2	2	
		RD262-3001-0004	. GASKET (Used on 404912) (LC)	2	2	
		AN814-2S	. PLUG AND BLEEDER (Used on 404912) (Supersedes AN814-2C) (LC)	1	1	
		RD262-3001-0002	. GASKET (Used on 404912) (LC)	1	1	
-121	1	19-406340	. PLATE ASSY, Dual type seal (LC)	1	1	
-122	4	703108-3	. SUPPORT, Primary/auxiliary J-box struts	1		
-123	4	703111	. ANGLE, J-box support	1		
		703912	. BRACKET, Harness support, auxiliary junction box strut	1		
		RD111-4012-3755	. BOLT (AP)	2		
		RD111-4009-0408	. BOLT (AP)	2		
		RD153-5002-0007	. WASHER (AP)	2		
		RD153-5002-0004	. WASHER (AP)	3		
		RD155-1002-0004	. WASHER (AP)	3		
		703104	. SPACER, J-box support (AP)	2		
		RD114-8005-1004	. NUT (AP)	3		
-124	3, 4	MS20500-1216	. NUT	2	2	
-125	3, 4	408310	. WASHER, Pillow block, turbopump support	2	2	
-126	4	408303	. PIN, Attaching, pump support	1	1	
-127	3	19-408250	. SUPPORT ASSY, Pump, pillow block, self aligning	2	2	
		RD111-1015-1010	. BOLT (AP)	4	4	
		408316	. WASHER, Pillow block (AP)	4	4	

FIG & INDEX NO	ZONE NO	PART NUMBER	DESCRIPTION 1 2 3 4 5 6 7	UNITS PER ASSY		USABLE ON CODE
6-128	11, 12	RD114-1005-0002	. NUT	4	4	
-129	11	408265-3	. WASHER, Clevis pin, interface panel	2	2	
-129A	11	RD153-5002-0008	. WASHER	2	2	
-130	10	410067	. PIN, interface panel, strut support clevis	2	2	
-131	10	408266	. STRUT ASSY, Fuel inlet, NO. 1 side, interface panel (NO. 1 fixed strut) (Welded)	1	1	
-132	12	408265-5	. WASHER, Clevis pin, interface panel	2	2	
-133	10	RD153-5002-0010	. WASHER	2	2	
-134	10	410068	. PIN, interface panel, strut support clevis	2	2	
-135	9	408264	. STRUT ASSY, Interface panel, "Y" brace to fuel inlet, NO. 2 (NO. 2 "Y" brace strut) (Welded)	1	1	
-136	11, 12	410094	. BLOCK ASSY, Pillow, interface panel support, fuel fitting	2	2	
		RD111-4008-0708	. BOLT (AP)	4	4	
		RD153-5002-0007	. WASHER (AP)	4	4	
		RE161-5001-0006	. . BEARING	1	1	
-137	10	RD114-1005-0002	. NUT	2	2	
-138	10	408265-7	. WASHER, Clevis pin, interface panel	2	2	
-139	10	RD153-5002-0012	. WASHER	2	2	
-140	10	410066	. PIN, Interface panel, strut support clevis	2	2	
-141	10	408318-7	. CLEVIS, Interface panel, variable	2	2	
		RD114-1005-0013	. NUT (AP)	1	1	
		RD114-1007-0013	. NUT (AP)	1	1	
-142	10	408733	. TURNBUCKLE, Interface panel, variable strut	1	1	
-143	10	408270	. STRUT ASSY, LOX dome, NO. 1 side, interface panel (NO. 1 adjustable strut) (Welded)	1	1	
-144	10, 12	RD114-1005-0002	. NUT	6	6	
-145	10	408265-9	. WASHER, Clevis pin, interface panel	2	2	
-146	9	RD153-5002-0014	. WASHER	2	2	
-147	9	410069	. PIN, Interface panel, strut support clevis	2	2	
-148	9	408318-5	. CLEVIS, Interface panel, variable	1	1	
		RD114-1005-0013	. NUT (AP)	1	1	
		RD114-1007-0013	. NUT (AP)	1	1	
-149	9	408733	. TURNBUCKLE, Interface panel, variable strut	1	1	
-150	9	408269	. STRUT ASSY, LOX dome, diagonal, interface panel (Adjustable diagonal strut) (Welded)	1	-	
-151	12	RD114-1005-0002	. NUT	2	2	
-152	12	408265-3	. WASHER, Clevis pin, interface panel	2	2	
-153	12	RD153-5002-0008	. WASHER	2	2	
-154	12	410067	. PIN, interface panel, strut support clevis	2	2	
-155	12	408318-3	. CLEVIS, Interface panel strut, variable	1	1	
		RD114-1005-0013	. NUT (AP)	1	1	
		RD114-1007-0013	. NUT (AP)	1	1	
-156	12	408733	. TURNBUCKLE, Interface panel, variable strut	1	1	
-157	12	408268	. STRUT ASSY, LOX dome, NO. 2 side, interface panel (NO. 2 adjustable strut) (Welded)	1	1	
-158	12	408265-5	. WASHER, Clevis pin, interface panel	2	2	
-159	12	RD153-5002-0010	. WASHER	2	2	
-160	12	410068	. PIN, Interface panel, strut support clevis	2	2	
-161	12	408264	. STRUT ASSY, Interface panel, "Y" brace to fuel inlet, NO. 2 (NO. 1 "Y" brace strut) (Welded)	1	1	
-162	12	408265-3	. WASHER, Clevis pin, interface panel	2	2	
-163	12	RD153-5002-0008	. WASHER	2	2	
-164	12	410067	. PIN, Interface panel, strut support clevis	2	2	
-165	12	408267	. STRUT ASSY, Fuel inlet, NO. 2 side, interface panel (NO. 2 fixed strut) (Welded)	1	1	
-166	9	410410-31	. PANEL ASSY, Interface, engine (See figure 7 for breakdown)	1	1	CQA
-167 THRU -173		DELETED				
-174	2	250898-11	. GIMBAL ASSY, Spherical (Gimbal bearing)	1	1	
		RD111-4010-4448	. BOLT (AP)	8	8	
		RD153-5002-0014	. WASHER (AP)	8	8	
-175	2	NA5-260013	. BOOT, Gimbal (Gimbal bearing boot)	1	1	
-176	2	208890	. FLANGE, Gimbal assembly	2	2	
-177	2	250925	. PAN, Boot, gimbal assembly	2	2	
		AN501AD416-10	. SCREW (AP)	4	4	
		LD153-0010-0010	. WASHER (AP)	4	4	
		RD114-6003-1004	. NUT (AP)	4	4	
-178	6	AN814-4SL	. PLUG AND BLEEDER (Supersedes AN814-4CL) (LC)	1	1	
-179	6	RE261-3004-0004	. SEAL (Interchangeable with 12100CR4 MFG by 08199) (LC)	1	1	
		408329	. PIN, Engine alignment (Used on thrust chamber injector)	4	4	

FIG & INDEX NO	ZONE NO	PART NUMBER	DESCRIPTION 1 2 3 4 5 6 7	UNITS PER ASSY		USABLE ON CODE
6-180	1	458800-141	. TURBOPUMP ASSY (See figures 10, 11, 12, and 13 for breakdown)	1		DCB
			Field Configuration for 458800-141 follows:			
			Incorporating MD changes 65 75 80 89 108 112 118 122			
		460182-1161	. . TURBOPUMP ASSY . . . X	NP		
		460182-1231	. . TURBOPUMP ASSY . . . X X	NP		
-180	1	458800-131	. TURBOPUMP ASSY (See figures 10, 11, 12, and 13 for breakdown)		1	CZB
			Field Configuration for 458800-131 follows:			
			Incorporating MD changes 65 75 80 89 108 112 118 122 155			
		460182-1261	. . TURBOPUMP ASSY . . . X		NP	
		460182-1271	. . TURBOPUMP ASSY . . . X		NP	
-180	1	458800-181	. TURBOPUMP ASSY (See figures 10, 11, 12, and 13 for breakdown)		1	EBB
-180	1	458800-171	. TURBOPUMP ASSY (See figures 10, 11, 12, and 13 for breakdown)		1	FAA
-181	3	209201-41	. THRUST CHAMBER ASSY (See figure 9 for breakdown)	1		GE
			Field Configuration for 209201-41 follows:			
			Incorporating MD changes 124 130 156 170			
		209717-821	. . THRUST CHAMBER ASSY . . . X X X	NP		
-181	3	209201-61	. THRUST CHAMBER ASSY (See figure 9 for breakdown)	1	1	EDB
-181	3	209201-81	. THRUST CHAMBER ASSY (See figure 9 for breakdown)		1	EKB
			Field Configuration for 209201-81 follows:			
			Incorporating MD changes 153 170			
		209717-831	. . THRUST CHAMBER ASSY . . . X	NP		
		209717-871	. . THRUST CHAMBER ASSY . . . X X	NP		
-181	3	209201-51	. THRUST CHAMBER ASSY (See figure 9 for breakdown)		1	ECB
			Field Configuration for 209201-51 follows:			
			Incorporating MD changes 158 170			
		209717-841	. . THRUST CHAMBER ASSY . . . X		NP	
		209717-881	. . THRUST CHAMBER ASSY . . . X X		NP	
-181	3	209201-71	. THRUST CHAMBER ASSY (See figure 9 for breakdown)		1	EJB
			Field Configuration for 209201-71 follows:			
			Incorporating MD changes 158 170			
		209717-851	. . THRUST CHAMBER ASSY . . . X		NP	
		209717-891	. . THRUST CHAMBER ASSY . . . X X		NP	
		209717-901	. . THRUST CHAMBER ASSY . . . X		NP	
-181	3	209201-91	. THRUST CHAMBER ASSY (See figure 9 for breakdown)		1	ESB
			Field Configuration for 209201-91 follows:			
			Incorporating MD changes 170			
		209717-911	. . THRUST CHAMBER ASSY . . . X		NP	
-181	3	209201-101	. THRUST CHAMBER ASSY (See figure 9 for breakdown)		1	EVB
			Field Configuration for 209201-101 follows:			
			Incorporating MD changes 170			
		209717-921	. . THRUST CHAMBER ASSY . . . X		NP	
-181	3	209201-121	. THRUST CHAMBER ASSY (See figure 9 for breakdown)		1	GBB
-181	3	209201-111	. THRUST CHAMBER ASSY (See figure 9 for breakdown)		1	GJA
-182	11	RE127-2001-0004	. CLAMP	1	1	
-183	11	MS9101-05	. BRACKET	1	1	
		AN520C10R8	. SCREW (AP)	1	1	
		LD153-0010-0007	. WASHER (AP)	1	1	
		NAS679C3W	. NUT (AP)	1	1	
-184	11	410052	. TUBE ASSY, Facility check calips switch (LC)	1	1	
		19-303857-7	. . NUT, Coupling	2	2	
		MS20819-6J	. . SLEEVE (Replaces MS20819-6C for all applications)	2	2	
		RD172-0007-0001	. . TAPE (COMPRESSED GAS)	AR	AR	
		RD172-0014-0030	. . TAPE (NITROGEN)	AR	AR	
		RD172-0018-1200	. . TAPE (1250 PSI)	AR	AR	
		410052-3	. . TUBE, 321 CRES, 3/8 IN. OD by 0.035 gage	1	1	
-185	11	MC221C4	. NUT (MFD by 92003) (LC)	1	1	
-186	11	19-410070	. ADAPTER ASSY, Calips, check, interface panel (LC)	1	1	
-187	11	AN814-4SL	. PLUG AND BLEEDER (Supersedes AN814-4CL) (LC)	1	1	
-187A	11	AN919-6S	. REDUCER (Supersedes AN919-6C) (LC)	1	1	
-188	11	RD262-3001-0004	. GASKET (LC)	1	1	
-189	10	407761	. CLAMP, Tube support, purge line	1	1	
		RD111-4010-6426	. BOLT (AP)	2	2	
		RD153-5002-0004	. WASHER (AP)	2	2	
-190	10	RE127-2002-0006	. CLAMP	1	1	
-191	10	407762	. SUPPORT, Tube, purge line	1	1	
		NAS1102C3-12	. SCREW (AP)	1	1	

FIG & INDEX NO	ZONE NO	PART NUMBER	DESCRIPTION 1 2 3 4 5 6 7	UNITS PER ASSY		USABLE ON CODE
6-192	10	601734	. NUTPLATE ASSY, Tube support, hydraulic control lines	1	1	
-193	2	410632	. COVER, Plate, liquid level, thrust chamber prefill		1	
		RD111-4010-6416	. BOLT (AP)		6	
		RD153-5002-0004	. WASHER (AP)		6	
-194	2	19 406238-1	. SEAL ASSY, Plate, dual type (LC)		1	
-195	9	RE127-2001-0004	. CLAMP	1	1	
-196	9	MS9102-20	. BRACKET	1	1	
-197	9	AN815-6S	. UNION (Supersedes AN815-6C) (LC)	1	1	
-198	9	410819	. TUBE ASSY, Fuel seal vents, gas generator, union to tee (Gas generator fuel seal vents tube) (LC)	1	1	
		AN818-6J	. . NUT (Replaces AN818-6C for all applications)	2	2	
		MS20819-6J	. . SLEEVE (Replaces MS20819-6C for all applications)	2	2	
		RD172-0002-0001	. . TAPE (ROCKET FUEL)	AR	AR	
		RD172-0014-0033	. . TAPE (RP-1)	AR	AR	
		RD172-0014-0039	. . TAPE (FLOW)	AR	AR	
		RD172-0014-0040	. . TAPE (DRAIN)	AR	AR	
		410819-3	. . TUBE, 321 CRES, 3 8 IN. OD by 0.035 gage by 20.00 IN. LG	1	1	
-198A		308223 11	. TUBE ASSY, Fuel seal vents, gas generator, tee to bushing (See figure 27, index 25, for REQMT) (LC)	REF	REF	
-199	8,9	410638-11	. TUBE ASSY, Control valve override, drain (Engine control valve override drain tube) (LC)	1	1	
		AN818-4J	. . NUT (Replaces AN818-4C for all applications)	2	2	
		MS20819-4J	. . SLEEVE (Replaces MS20819-4C for all applications)	2	2	
		RD172-0002-0001	. . TAPE (ROCKET FUEL)	AR	AR	
		RD172-0014-0033	. . TAPE (RP-1)	AR	AR	
		RD172-0014-0039	. . TAPE (FLOW)	AR	AR	
		RD172-0014-0040	. . TAPE (DRAIN)	AR	AR	
		410638-5	. . TUBE, 321 CRES, 1 4 IN. OD by 0.026 gage by 18.00 IN. LG	1	1	
-200	9	AN833-4S	. ELBOW (Supersedes AN833-4C) (LC)	1	1	
-201	9	RD114-1003-1004	. NUT (LC)	1	1	
-202	9	RD262-1002-0004	. RING (LC)	1	1	
-203	9	RD262-3001-0004	. GASKET (LC)	1	1	
-204	9	RE273-4004-0004	. TEE (LC)	1	1	
-205	9	410644-11	. TUBE ASSY, Tee to cross, fuel overboard drain (LC)	1	1	
		AN818-8J	. . NUT (Replaces AN818-8C for all applications)	2	2	
		MS20819-8J	. . SLEEVE (Replaces MS20819-8C for all applications)	2	2	
		RD172-0002-0001	. . TAPE (ROCKET FUEL)	AR	AR	
		RD172-0014-0033	. . TAPE (RP-1)	AR	AR	
		RD172-0014-0040	. . TAPE (DRAIN)	AR	AR	
		410644-5	. . TUBE, 321 CRES, 1/2 IN. OD by 0.049 gage by 10.00 IN. LG	1	1	
-206	2	407791	MANIFOLD ASSY, Hypergol (LC)	REF	REF	
-207	11	308391	SWITCH ASSY, Pressure-actuated, calibrationable (Replaces NAS-28183 per MD169) (NO. 2 thrust OK pressure switch) (J73) (See figure 31, index 126, for REQMT)	REF	REF	

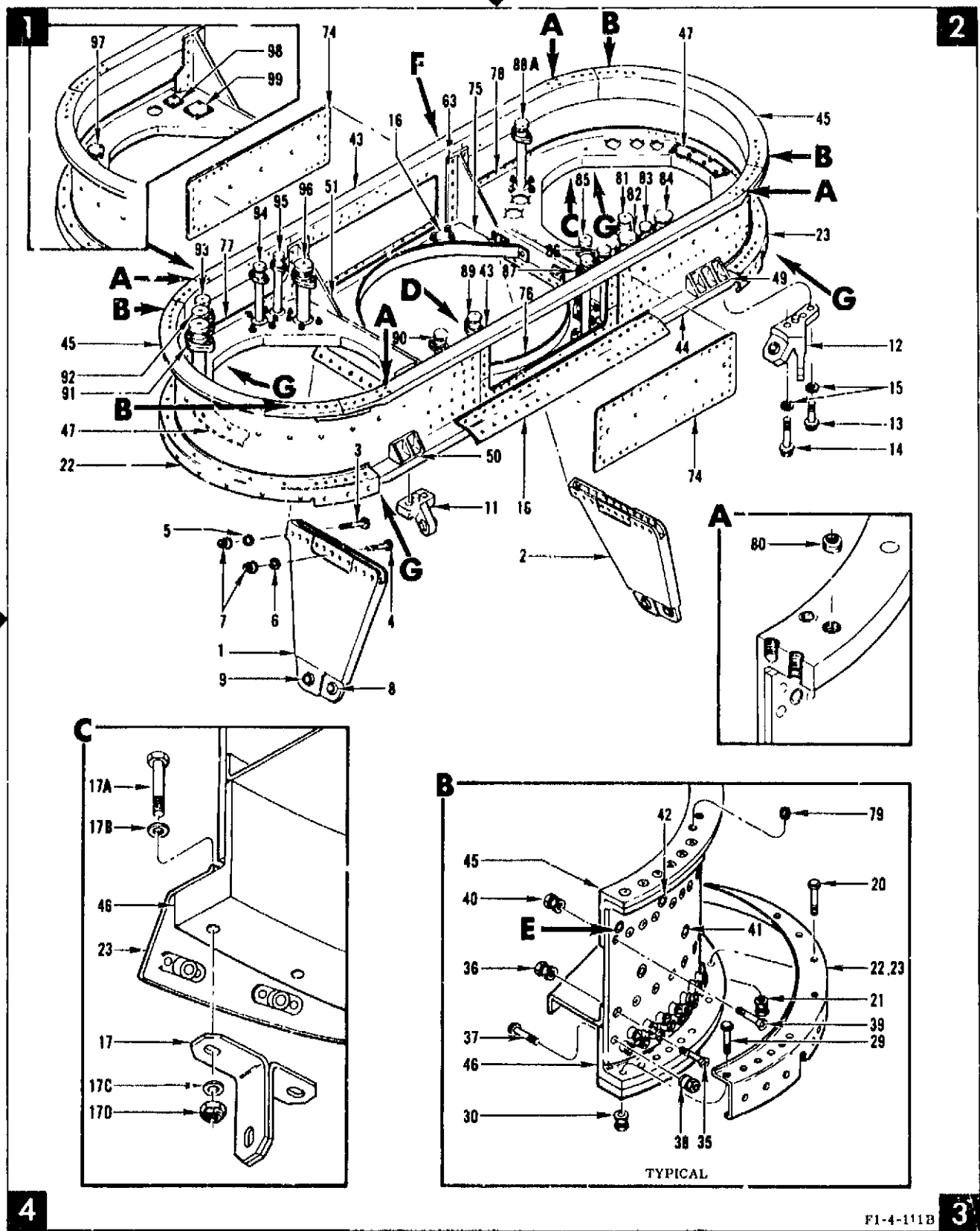

Figure 7. Engine Interface Panel (Sheet 1 of 2)

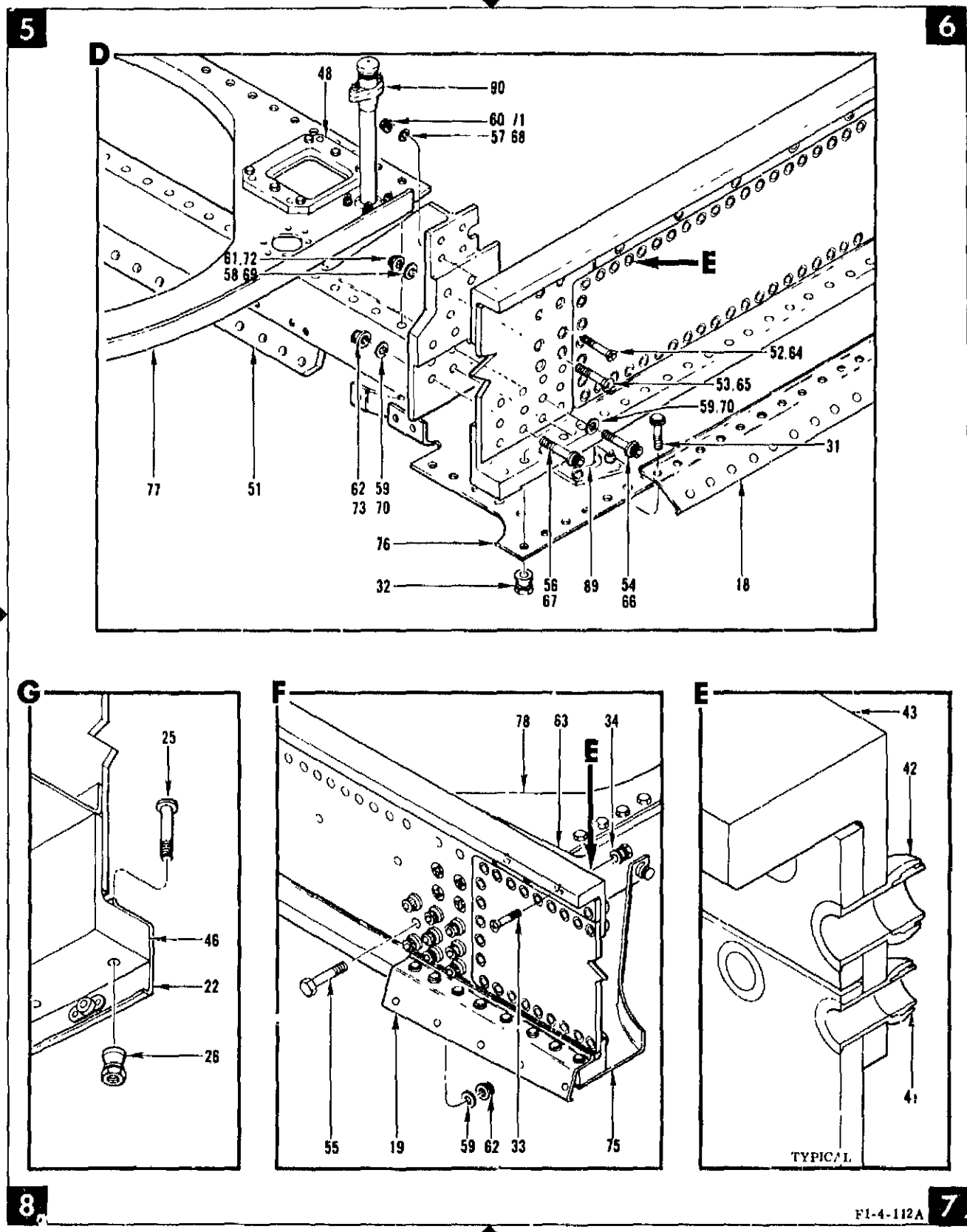

Figure 7. Engine Interface Panel (Sheet 2 of 2)

FIG & INDEX NO	ZONE NO	PART NUMBER	DESCRIPTION 1 2 3 4 5 6 7	UNITS PER ASSY	USABLE ON CODE
7-		410410-31	PANEL ASSY, Interface, engine (See figure 6 Index 166, for REQMD)	REF	
- 1	4	410047-1	. STRUT ASSY, "Y" brace, interface panel (Replaces 408261-1 for spares)	1	
- 2	2	410047-2	. STRUT ASSY, "Y" brace, interface panel (Replaces 408261-2 for spares)	1	
- 3	1	NAS1106-20	. BOLT (AP)	6	
- 4	1	NAS1306PA14	. SCREW (AP)	5	
- 5	1	LD153-0010-0013	. WASHER (AP)	6	
- 6	1	LD153-0010-0014	. WASHER (AP)	5	
- 7	1	NAS679C6	. NUT (AP)	11	
- 8	4	RF131-5001-0005	. . BEARING (NHA 410097-1, and -2)	1	
- 9	4	RF131-5001-0006	. . BEARING (NHA 410047-1, and -2)	1	
-10		DELETED			
-11	1	410095	. BRACKET ASSY, Fitting, interface panel	1	
		RD111-4008-6826	. BOLT (AP)	2	
		RD153-5002-0008	. WASHER (AP)	2	
-12	2	410096	. BRACKET ASSY, Interface panel, inboard rotational support (Replaces 408273 for spares)	1	
-13	2	RD111-4008-6824	. BOLT (AP)	2	
-14	2	RD111-4008-6832	. BOLT (AP)	1	
-15	2	RD153-5002-0003	. WASHER (AP)	3	
-16	1	410647	. PLATE, Cover	1	
		NAS1004-6A	. BOLT (AP)	3	
		LD153-0013-0002	. WASHER (AP)	3	
		RD153-1002-0004	. WASHER (AP)	1	
		NAS679C4W	. NUT (AP)	3	
-17	4	410648	. BRACKET ASSY, Tie	1	
-17A	4	NAS1004-18A	. BOLT (AP)	2	
-17B	4	LD153-0013-0002	. WASHER (AP)	2	
-17C	4	RD153-1002-0004	. WASHER (AP)	2	
-17D	4	NAS679C4W	. WASHER (AP)	2	
		410100-51	. PANEL ASSY, Interface, engine (Interface panel)	1	
		410100-41	. . PANEL SUBASSY, Interface, panel	1	
-18	2, 6	410420	. . . BRACKET ASSY, Interface panel, center, inboard	1	
		NAS1023C4	. . . NUT (AP)	27	
-19	8	410119	. . . BRACKET ASSY, Interface panel, center, outboard	1	
		NAS1023C4	. . . NUT (AP)	13	
-20	3	HL30-8-9	. . . HI-LOK PIN, Protruding, shear head (MFD by 73197)	18	
-21	3	HL194W8	. . . HI-LOK COLLAR (MFD by 73197)	18	
-22	1, 3, 8	410122	. . . BRACKET ASSY, Interface panel, NO. 2 end	1	
		NAS1023C4	. . . NUT (AP)	18	
-23	2, 3, 4	410121	. . . BRACKET ASSY, Interface panel, NO. 1 end	1	
-24		DELETED			
-25	8	HL30-8-17	. . . HI-LOK PIN, Protruding, shear head (MFD by 73197)	2	
-26	8	HL194W8	. . . HI-LOK COLLAR (MFD by 73197)	2	
-27		DELETED			
-28		DELETED			
-29	3	HL30-8-17	. . . HI-LOK PIN, Protruding, shear head (MFD by 73197)	24	
-30	4	HL194W8	. . . HI-LOK COLLAR (MFD by 72197)	24	
-31	6	HL30-8-17	. . . HI-LOK PIN, Protruding, shear head (MFD by 73197)	44	
-32	5	HL194W8	. . . HI-LOK COLLAR (MFD by 72197)	44	
-33	7	HL61-8-6	. . . HI-LOK PIN, 100 degree, flush, shear head (MFD by 73197)	14	
-34	7	HL72-8	. . . HI-LOK COLLAR (MFD by 73197)	14	
-35	3	HL51-8-5	. . . HI-LOK PIN, Protruding, shear head (MFD by 73197)	88	
-36	4	HL72-8	. . . HI-LOK COLLAR (MFD by 73197)	88	
-37	4	HL30-8-6	. . . HI-LOK PIN, Protruding, shear head (MFD by 73197)	238	
-38	3	HL72-8	. . . HI-LOK COLLAR (MFD by 73197)	238	
-39	3	HL61-8-6	. . . HI-LOK PIN, 100 degree, flush, shear head (MFD by 73197)	202	
-40	4	HL72-8	. . . HI-LOK COLLAR (MFD by 73197)	202	
-41	3, 7	BN359-1032-3	. . . NUT ASSY, Blind (MFD by 73197)	158	
-42	3, 7	BN360-524 6	. . . NUT ASSY, Blind (MFD by 73197)	54	
-43	1, 7	410401	. . . RAIL, Interface panel, top	2	
-44	2	410402	. . . RAIL, Interface panel, bottom	2	
-45	1, 2, 4	410403	. . . SEGMENT, Interface panel, top	2	
-46	4, 8	410404	. . . SEGMENT, Interface panel, bottom	2	
-47	1, 2	408729	. . . PLATE, Cover, Interface panel	2	
		AN4-5A	. . . BOLT (AP)	8	
		RD153-1002-0001	. . . WASHER (AP)	8	
		NAS679C4W	. . . NUT (AP)	8	
-48	5	410415	. . . PLATE ASSY, Mounting, interface panel	1	
		NAS1004-1B	. . . BOLT (AP)	6	
		RD153-5001-0004	. . . WASHER (AP)	6	
-49	2	410413	. . . SUPPORT, Bracket, interface panel, NO. 1 end	1	
		NAS1102-4-18	. . . SCREW (AP)	9	
		RD114-8003-2004	. . . NUT (AP)	9	
-50	1	410414	. . . SUPPORT, Bracket, interface panel, NO. 2 end	1	
		NAS1102-4-18	. . . SCREW (AP)	6	
		RD114-8003-2004	. . . NUT (AP)	6	

FIG & INDEX NO	ZONE NO	PART NUMBER	DESCRIPTION 1 2 3 4 5 6 7	UNITS PER ASSY	USABLE ON CODE
7-51	1,5	110105	. . . BEAM, Interface panel	1	
-52	6	NAS1102-4-19	. . . SCREW (AP)	8	
-53	6	NAS1102-6-21	. . . SCREW (AP)	6	
-54	6	RD111-4010-3615	. . . BOLT (AP)	4	
-55	8	RD111-1009-3619	. . . BOLT (AP)	1	
-56	6	RD111-4008-6610	. . . BOLT (AP)	13	
-57	6	RD153-1002-0004	. . . WASHER (AP)	8	
-58	5	RD153-1002-0006	. . . WASHER (AP)	8	
-59	5,6,7	RD153-5002-0006	. . . WASHER (AP)	32	
-60	6	RD114-8003-2004	. . . NUT (AP)	8	
-61	5	RD114-8003-2006	. . . NUT (AP)	8	
-62	5,7	RD114-8005-2006	. . . NUT (AP)	14	
-63	1,7	110305	. . . BLAM, Interface panel	1	
-64	6	NAS1102-4-17	. . . SCREW (AP)	8	
-65	6	NAS1102-6-21	. . . SCREW (AP)	8	
-66	6	RD111-4010-3615	. . . BOLT (AP)	4	
-67	6	RD111-4008-6610	. . . BOLT (AP)	14	
-68	6	RD153-1002-0004	. . . WASHER (AP)	8	
-69	5	RD153-1002-0006	. . . WASHER (AP)	8	
-70	5,6	RD153-5002-0006	. . . WASHER (AP)	18	
-71	6	RD114-8003-2004	. . . NUT (AP)	8	
-72	5	RD114-8003-2006	. . . NUT (AP)	8	
-73	5	RD111-8005-2006	. . . NUT (AP)	14	
-74	1,2	110409	. . . DOOR ASSY, Access, Interface panel	2	
		NAS1102-3-14	. . . SCREW (AP)	60	
-75	1,7	410408	. . . PANEL ASSY, Interface, center, outboard	1	
		RD111-1009-6425	. . . BOLT (AP)	6	
		RD153-5002-0004	. . . WASHER (AP)	6	
		RD153-1002-0004	. . . WASHER (AP)	6	
		RD114-8003-2004	. . . NUT (AP)	6	
-76	2,5	410411	. . . PANEL ASSY, Interface, center, inboard	1	
		RD111-4009-6425	. . . BOLT (AP)	6	
		RD153-5002-0004	. . . WASHER (AP)	6	
		RD153-1002-0004	. . . WASHER (AP)	6	
		RD114-8003-2004	. . . NUT (AP)	6	
-77	1,5	410407	. . . PANEL ASSY, Interface, NO. 2 end	1	
		RD111-1009-3409	. . . BOLT (AP)	23	
		RD153-5004-0004	. . . WASHER (AP)	23	
-78	2,7	110406	. . . PANEL ASSY, Interface, NO. 1 end	1	
		RD111-1009-3109	. . . BOLT (AP)	27	
		RD153-5004-0004	. . . WASHER (AP)	27	
-79	3	KNL4281SP	. . . INSERT (MFD by 29372)	30	
-80	2	KNL1032ISP	. . . INSERT (MFD by 29372)	16	
-81	2	703937-51	. . . RECEPTACLE ASSY, electrical, 10SL-4S shell size (Altered from NA5-27556T104S) (Interface panel) (NHA 502948 and 502948-11) (J19)	REF	
		RD111-4011-6414	. . . BOLT (AP)	4	
		RD153-5002-0004	. . . WASHER (AP)	4	
		RD153-1002-0004	. . . WASHER (AP)	4	
		RD114-8003-1004	. . . NUT (AP)	4	
-82	2	703937-101	. . . RECEPTACLE ASSY, Electrical, 28-21P shell size (Altered from NA5-27551T2821P) (Interface panel) (NHA 704529) (J101)	REF	
		RD111-4011-6423	. . . BOLT (AP)	3	
		RD153-5002-0004	. . . WASHER (AP)	3	
		RD153-1002-0004	. . . WASHER (AP)	3	
		RD152-0003-0001	. . . SPACER (AP)	1	
		RD114-8003-1004	. . . NUT (AP)	3	
-83	2	703937-131	. . . RECEPTACLE ASSY, Electrical, 14S-5P shell size (Altered from NA5-27551T145P) (Interface panel) (NHA 502947) (J174)	REF	
		RD111-4011-6414	. . . BOLT (AP)	4	
		RD153-5002-0004	. . . WASHER (AP)	4	
		RD153-1002-0004	. . . WASHER (AP)	4	
		RD114-8003-1004	. . . NUT (AP)	4	
-84	2	703937-91	. . . RECEPTACLE ASSY, Electrical, 28-12P shell size (Altered from NA5-27556T1427) (Interface panel) (NHA 502942) (J470)	REF	
		RD111-4011-6414	. . . BOLT (AP)	4	
		RD153-5002-0004	. . . WASHER (AP)	4	
		RD153-1002-0004	. . . WASHER (AP)	4	
		RD114-8003-1004	. . . NUT (AP)	4	
-85	2	703937-71	. . . RECEPTACLE ASSY, Electrical, 22-14P shell size (Altered from NA5-27551T2214P) (Interface panel) (NHA 704530) (J102)	REF	
		RD111-4011-6414	. . . BOLT (AP)	3	
		RD153-5002-0004	. . . WASHER (AP)	3	
		RD153-1002-0004	. . . WASHER (AP)	3	
		RD114-8003-1004	. . . NUT (AP)	3	

FIG & INDEX NO	ZONE NO	PART NUMBER	DESCRIPTION 1 2 3 4 5 6 7	UNITS PER ASSY	USABLE ON CODE
7-86	2	703937-61	. . . RECEPTALE ASSY, Electrical, 22-14S shell size (Altered from NA5-27551T2214S) (Interface panel) (NHA 704527) (J103)	REF	
		RD111-4011-6414	. . . BOLT (AP)	3	
		RD153-5002-0004	. . . WASHER (AP)	3	
		RD153-1002-0004	. . . WASHER (AP)	3	
		RD114-8003-1004	. . . NUT (AP)	3	
-87	2	703937-21	. . . RECEPTACLE ASSY, Electrical, 20-16P shell size (Altered from NA5-27551T2016P) (Interface panel) (NHA 704538) (J100)	REF	
		RD111-4011-6414	. . . BOLT (AP)	4	
		RD153-1002-0004	. . . WASHER (AP)	4	
		AS30	. . . WASHER (MFD by 10630) (AP)	4	
		RD114-8003 1004	. . . NUT (AP)	4	
-88		DELETED			
-88A	2	703937-41	. . . RECEPTACLE ASSY, Electrical, 20-29P shell size (Altered from NA5-27551T2029P) (Interface panel) (NHA 704534-11) (J106)	REF	
		RD111-4011-6414	. . . BOLT (AP)	3	
		RD153-5002-0004	. . . WASHER (AP)	3	
		RD153-1002-0004	. . . WASHER (AP)	3	
		RD114-8003-1004	. . . NUT (AP)	3	
-89	1, 6	703937-31	. . . RECEPTACLE ASSY, Electrical, 20-27P shell size (Altered from NA5-27551T2027P) (Interface panel) (NHA 704533) (J104)	REF	
		RD111-4011-6414	. . . BOLT (AP)	4	
		RD153-5002-0004	. . . WASHER (AP)	4	
		RD153-1002-0004	. . . WASHER (AP)	4	
		RD114-8003-1004	. . . NUT (AP)	4	
-90	1, 6	703937-11	. . . RECEPTACLE ASSY, Electrical, 18-1P shell size (Altered from NA5-27556T81S) (Interface panel) (NHA 502943) (J800)	REF	
		RD111-4011-6414	. . . BOLT (AP)	4	
		RD153-5002-0004	. . . WASHER (AP)	4	
		RD153-1002-0004	. . . WASHER (AP)	4	
		RD114-8003-1004	. . . NUT (AP)	4	
-91	1	703937-111	. . . RECEPTACLE ASSY, Electrical, 36-10P shell size (Altered from NA5-27556T145SS) (Interface panel) (NHA 502944) (J18)	REF	
		RD111-4011-6414	. . . BOLT (AP)	4	
		RD153-5002-0004	. . . WASHER (AP)	4	
		RD153-1002-0004	. . . WASHER (AP)	4	
		RD114-8003-1004	. . . NUT (AP)	4	
-92	1	703937-91	. . . RECEPTACLE ASSY, Electrical, 28-12P shell size (Altered from NA5-27551T2812P) (Interface panel) (NHA 502944) (J20)	REF	
		RD111-4011-6414	. . . BOLT (AP)	4	
		RD153-5002-0004	. . . WASHER (AP)	4	
		RD153-1002-0004	. . . WASHER (AP)	4	
		RD114-8003-1004	. . . NUT (AP)	4	
-93	1	703937-81	. . . RECEPTACLE ASSY, Electrical, 24-28P shell size (Altered from NA5-27551T2428P) (Interface panel) (NHA 704536) (J143)	REF	CFA
		RD111-4011-6417	. . . BOLT (AP)	4	
		RD153-5002-0004	. . . WASHER (AP)	4	
		RD153-1002-0004	. . . WASHER (AP)	4	
		RD114-8005-1004	. . . NUT (AP)	4	
-94	1	703937-141	. . . RECEPTACLE ASSY, Electrical, 14S-5P shell size (Altered from NA5-27551T142P) (Interface panel) (NHA 502949) (J142)	REF	
		RD111-4011-6414	. . . BOLT (AP)	3	
		RD153-5002-0004	. . . WASHER (AP)	3	
		RD153-1002-0004	. . . WASHER (AP)	3	
		RD114-8003-1004	. . . NUT (AP)	3	
-95	1	703937	. . . RECEPTACLE ASSY, Electrical, 16S-8P shell size (Altered from NA5-27551T168P) (Interface panel) (NHA 704540) (J140)	REF	CEA
		RD111-4011-6414	. . . BOLT (AP)	4	
		RD153-5002-0004	. . . WASHER (AP)	1	
		RD153-1002-0004	. . . WASHER (AP)	4	
		RD114-8003-1004	. . . NUT (AP)	4	
-96	1	703937-121	. . . RECEPTACLE ASSY, Electrical, 36-7P shell size (Altered from NA5-27551T367P) (Interface panel) (NHA 704541) (J141)	REF	CEA
		RD111-4011-6414	. . . BOLT (AP)	4	
		RD153-5002-0004	. . . WASHER (AP)	4	
		RD153-1002-0004	. . . WASHER (AP)	4	
		RD114-8003-1004	. . . NUT (AP)	4	
-97	1	410827	. . . PLATE, Cover, J143, interface panel	1	GLB
		NAS679C4W	. . . NUT (AP)	3	
		NAS1004-6A	. . . BOLT (AP)	3	
		LD153-0013-0002	. . . WASHER (AP)	3	
		RD153-1002-0004	. . . WASHER (AP)	3	

FIG & INDEX NO	ZONE NO	PART NUMBER	DESCRIPTION 1 2 3 4 5 6 7	UNITS PER ASSY	USABLE ON CODE
7-98	1	410826	. . . PLATE, Cover, 3140, interface panel	1	GLB
		NAS679C4W	. . . NUT (AP)	4	
		NAS1004 6A	. . . BOLT (AP)	4	
		LD153-0013-0002	. . . WASHER (AP)	4	
		RD153-1002-0004	. . . WASHER (AP)	4	
-99	1	410828	. . . PLATE, Cover, 3141, interface panel	1	GLB
		NAS679C4W	. . . NUT (AP)	4	
		NAS1004-6A	. . . BOLT (AP)	4	
		LD153-0013-0002	. . . WASHER (AP)	4	
		RD153-1002-0004	. . . WASHER (AP)	4	

Figure 8 deleted.

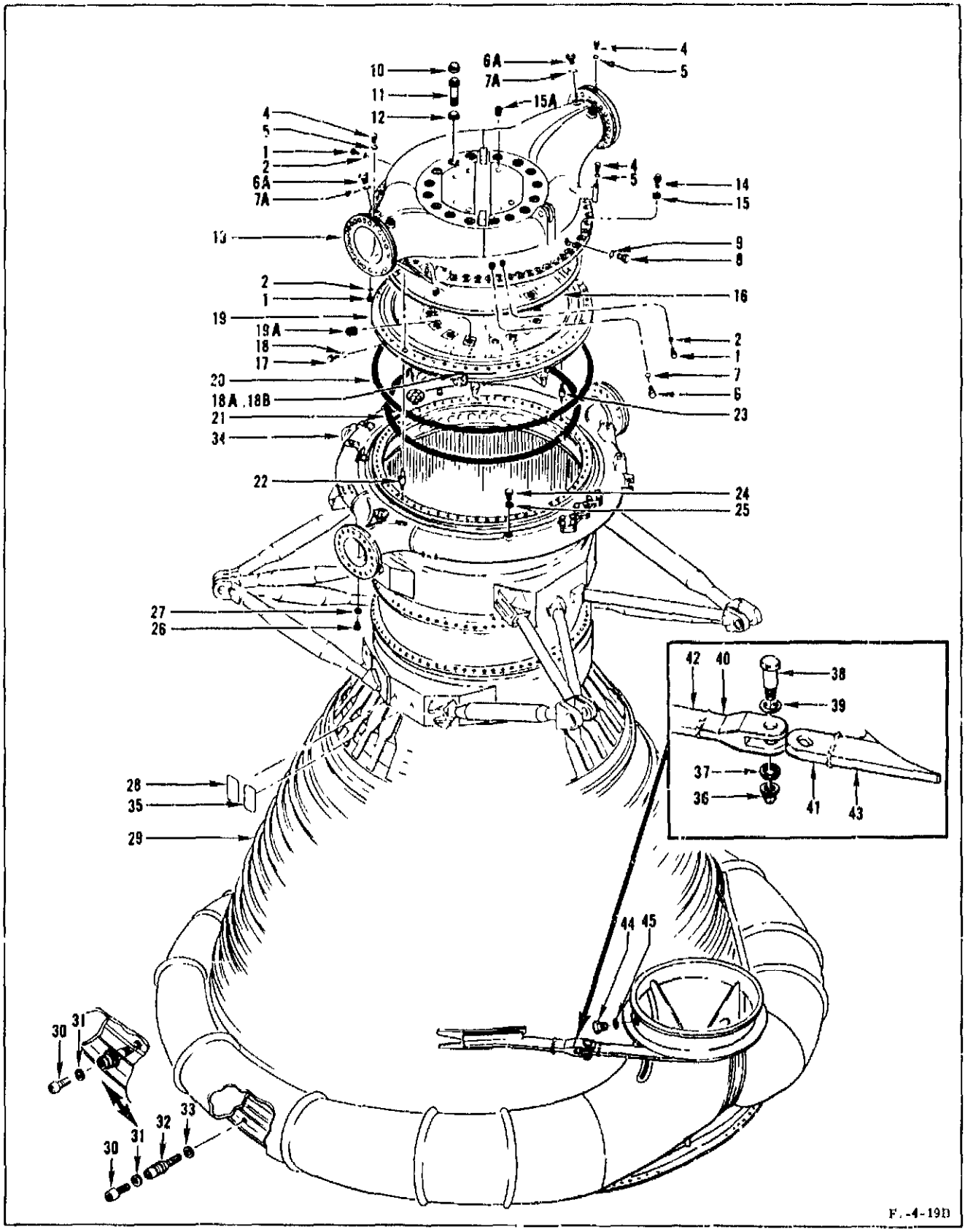

Figure 9. Thrust Chambe, Assembly

FIG & INDEX NO	ZONE NO	PART NUMBER	DESCRIPTION 1 2 3 4 5 6 7	UNITS PER ASSY					USABLE ON CODE
9-		209201-11	THRUST CHAMBER ASSY (See figure 6, index 151 . . . . . for RFQMT)	REF					
		209201-51	THRUST CHAMBER ASSY (See figure 6, index 181 . . . . . for RFQMT)	REF					
		209201-61	THRUST CHAMBER ASSY (See figure 6, index 181 . . . . . for RFQMT)	REF					
		209201-71	THRUST CHAMBER ASSY (See figure 6 index 181 . . . . . for RFQMT)	REF					
		209201-81	THRUST CHAMBER ASSY (See figure 6, index 1 1 . . . . . for RFQMT)	REF					
		209201-91	THRUST CHAMBER ASSY (See figure 6, index 181 . . . . . for RFQMT)		REF				
		209201-101	THRUST CHAMBER ASSY (See figure 6, index 181, ... for RFQMT)			REF			
		209201-121	THRUST CHAMBER ASSY (See figure 6, index 181 . . . . . for RFQMT)				REF		
		209201-111	THRUST CHAMBER ASSY (See figure 6, index 161 . . . . . for RFQMT)					REF	
- 1		AN814-4JL	. PLUG AND BLEEDER (Supersedes AN814-4CL)(Taps . . . CO2c, CO1b-1, CO1b-2, CO3b, and CO3c Used on engines not incorporating MD140 change)(LC)	5	5				
- 1		AN814-4JL	. PLUG AND BLEEDER (Supersedes AN814-4CL) . . . . . (Taps CO1b-1, CO1b-2, and CO3c) (Used on engines incorporating MD140 change) (LC			3	3	3	
- 2		RE261-3004-0004	. SEAL (Interchangeable with 12100CR4 MFD by . . . . . 08199) (Used on engines not incorporating MD140 change) (LC)	5	5				
- 2		RE261-3004-0001	. SEAL (Interchangeable with 12100CR4 MFD by . . . . . 06199) (Used on engines incorporating MD140 change) (LC)			3	3	3	
- 3		DELETED							
- 4		AN814-2JL	. PLUG AND BLEEDER (Supersedes AN814-2CL) (LC) .	3	3	3	3	3	
- 5		RE261-3004-0002	. SEAL (Interchangeable with 12100CR2 MFD by 08199)(LC)	3	3	3	3	3	
- 6		AN814-12JL	. PLUG AND BLEEDER (Supersedes AN814-12CL)(LC) . . .	2	2	2	2	2	
- 6A		AN814-8JL	. PLUG AND BLEEDER (Supersedes AN814-8CL) (LC) . . .	4	4	4	4	4	
- 7		RE261-3004-0012	. SEAL (Interchangeable with 12100CR12 MFD by 08199)(LC)	2	2	2	2	2	
- 7A		RE261-3004-0008	. SEAL (Interchangeable with 12100CR8 MFD by 08199)(LC)	4	4	4	4	4	
- 8		208029	. PLUG, Transducer boss, 7 16-20UNF-3A (LC)	4	4	2	2	2	
- 9		RE261-3004-0004	. SEAL (Interchangeable with 12100CR4 MFD by 08199)(LC)	4	4	2	2	2	
-10		201548	. PLUG, Sealing, dome (LC)	16	16	16	16	16	
-11		201590-3	. BOLT, External wrenching	16	16	16	16	16	
-12		12190PG17	. SEAL (MFD by 08199) (LC)	16	16	16	16	16	
-13		209250	. DOME ASSY, Injector, thrust chamber (Oxidizer dome) . . (Welded) (LC)	1	1				
-13		209250-11	. DOME ASSY, Injector, thrust chamber (Oxidizer dome) . . (Welded) (LC)			1	1	1	
-14		201599	. BOLT, External wrenching 5 4 16UNF-3A (AP)	58	58	58	58	58	
-14		201599-5	. BOLT, External wrenching, 3 4-16UNF-3A (AP) . . . . . (Used in holes NO 11 and 41)	2	2	2	2	2	
-14		201599-3	. BOLT, External wrenching, 3 4-16UNF-3A (AP) . . . . . (Used in holes NO. 21, 31, 37, and 58)	4	4	4	4	4	
-15		MS20002C12	. WASHER (AP)	64	64	64	64	64	
-15A		MS21208F1415	. . INSERT (LC)	8	8	8	8	8	
-16		19-209335-1	. GASKET, Thrust chamber (LC)	1	1	1	1	1	
-17		AN814-4JL	. PLUG AND BLEEDER (Supersedes AN814-4CL) . . . . . (Taps CG1a and CG1c) (Used on engines not incorporating MD177 change) (LC)	2	2	2	2		
-17		AN814-4JL	. PLUG AND BLEEDER (Supersedes AN814-4CL) . . . . . (Tap CG1a) (Used on engines incorporating MD177 change) (LC)					1	
-18		RE261-3004-1004	. SEAL (Interchangeable with 12100AA4 MFD by 08199) . . . (Used on engines not incorporating MD177 change) (LC)	2	2	2	2		
-18		RE261-3004-1004	. SEAL (Interchangeable with 12100AA4 MFD by 08199) (Used on engines incorporating MD177 change)(LC)					1	
-18A		AN814-2JL	. PLUG AND BLEEDER (Supersedes AN814-2CL)(LC)	1	1	1	1	1	
-18B		RE261-3004-1002	. SEAL (Interchangeable with 12100AA2 MFD by 08199)(LC)	1	1	1	1	1	
-19		209641	. PLATE ASSY, Baffled injector, 31 ring (Thrust chamber . injector) (Brazed) (LC)	1	1	1			
-19		209641-11	. PLATE ASSY, Baffled injector, 31 ring (Thrust chamber . injector) (Brazed) (LC)				1	1	
-19A		364-17CNVX1.25	. . INSERT (MFD by 91767) (LC)	16	16	16	16	16	
-20		19-208054-2	. SEAL, Injector, thrust chamber (LC)	1	1	1	1	1	
-21		19-459710	. SEAL, Metal O-ring (LC)	1	1	1	1	1	
-22		201581	. PIN, Index, injector plate, diamond shape (LC)	1	1	1	1	1	
-23		201582	. PIN, Index injector plate (LC)	1	1	1	1	1	
-24		AN814-4JL	. PLUG AND BLEEDER (Supersedes AN814-4CL) . . . . . (Taps CF1c, CF2c, CF1a, CF2a, CF1b, and CF2b) (Used on engines not incorporating MD140 change) (LC)	6	6				
-24		AN814-4JL	. PLUG AND BLEEDER (Supersedes AN814-4CL) (Taps . . . CF1c, CF2c, CF1a, and CF2a) (Used on engines incorporating MD140 change) (LC)			4	4	4	

FIG & INDEX NO	ZONE NO	PART NUMBER	DESCRIPTION 1 2 3 4 5 6 7	UNITS PER ASSY					USABLE ON CODE
9-25		RE261-3004-0004	. SEAL (Interchangeable with 12100CR4 MED by 08199) . . (Used on engines not incorporating, MD140 change) (LC)	6	6				
-25		RE261-3004-0004	SEAL (Interchangeable with 12100CR4 MED by 08199) . (Used on engines incorporating MD140 change)(LC)			4	4	4	
-26		AN814-2J1	. PLUG AND BLEEDER (Supersedes AN814-2CL) (LC) . . .	3	3	3	3	3	
-27		RE261-3004-0002	. SEAL (Interchangeable with 12100CR2 MED by 08199) (LC)	3	3	3	3	3	
-28		RD171-1027-0001	. NAMEPLATE	1	1	1	1	1	
-29		209202-71	. BODY ASSY, Thrust chamber (Welded)	1					
-29		209202-51	BODY ASSY, Thrust chamber (Welded) . . . . . (NHA 209201-51)	1					
-29		209202-61	. BODY ASSY, Thrust chamber (Welded) (NHA209201-61)	1					
-29		209202-71	. BODY ASSY, Thrust chamber (Welded) (NHA 209201-71)	1					
-29		209202-61	. BODY ASSY, Thrust chamber (Welded) (NHA 209201-81)	1					
-29		209202-91	BODY ASSY, Thrust chamber (Welded		1				
-29		209202-111	. BODY ASSY Thrust chamber (Welded)				1	1	
29		209202-101	BODY ASSY, Thrust chamber (Welded)			1			
-30		209634-3	. . PLUG, Drain (LC)				4	4	
-30		209634	. . PLUG, Drain (LC)	4	4	4			
-31		RE261-3004-1003	. . SEAL (Interchangeable with 12100AA3 MED by . . . 08199) (LC)	4	4	4	4	4	
-32		209635	. ADAPTER, Drain (LC)	4					
-32		209607	. ADAPTER, Drain, return manifold, thrust chamber (Welded) (LC		1	4	4	4	
-33		209636	. . GASKET, Drain adapter (LC)	4					
		NS600-250H	. . RING (MED by 79136) (LC)	2	2	2	2	2	
-34		RSBY20-101	. . BEARING (MED by 81629) (Alternate ASBY20-101 . . MED by 15860)	1	1	1	1	1	
-35		RD171-1027-0001	. NAMEPLATE	1	1	1	1	1	
		RD171-1041-0001	. NAMEPLATE	1	1	1	1	1	
-36		PD114-8005-1008	NUT	2	2	2	2	2	
-37		RD159-5003-0008	. . WASHER	2	2	2	2	2	
-38		20879	. PIN, Inlet support, turbine exhaust manifold	2	2	2	2	2	
-39		RD159-5002-0012	. . WASHER	2	2	2	2	2	
-40		209677	. . CLEVIS, Inlet support, turbine exhaust manifold . . .	2	2	2	2	2	
-41		209676	. . TONGUE, Inlet support, turbine exhaust manifold, . .	2	2	2	2	2	
-42		209202-69	. BRACE, Body, thrust chamber assembly	2	2	2	2	2	
-43		209202-79	. . BRACE, Body, thrust chamber assembly	2	2	2	2	2	
-44		AN814-2J1	. PLUG AND BLEEDER (Supersedes AN814-2CL) (LC) . . .	1	1	1	1	1	
-45		RE261-3004-1002	. SEAL (Interchangeable with 12100AA2 MED by 08199)(LC)	1	1	1	1	1	

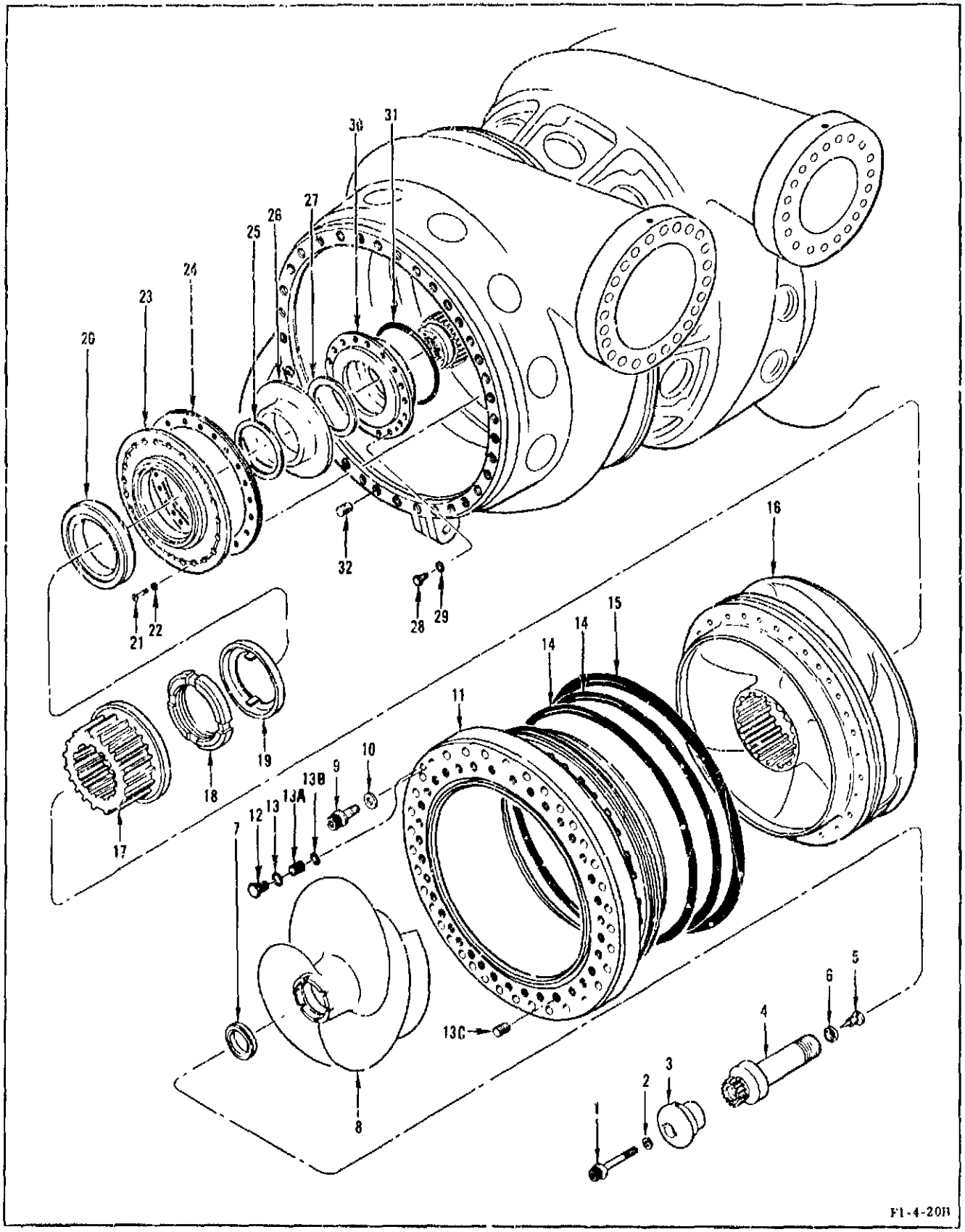

Figure 10. Turbopump Oxidizer Assembly

FIG & INDEX NO	ZONE NO	PART NUMBER	1 2 3 4 5 6 7 DESCRIPTION	UNITS PER ASSY		USABLE ON CODE
			TURBOPUMP OXIDIZER PUMP ASSEMBLY			
10-		458800-131	TURBOPUMP ASSY (See figure 6, index 180, for REQMT)	REF		
		458800-141	TURBOPUMP ASSY (See figure 6, index 180, for REQMT)	REF		
		458800-161	TURBOPUMP ASSY (See figure 6, index 180, for REQMT)	REF		
		458800-171	TURBOPUMP ASSY (See figure 6, index 180, for REQMT)		REF	
			PARTIAL BREAKDOWN FOLLOWS			
- 1		459737	. BOLT, Lock (LC)	1	1	
- 2		459749	. WASHER, Lock, inducer fairing (LC)	1	1	
- 3		459735	. CAP, Fairing, LOX pump (LC)	1	1	
- 4		459740	. BOLT, Retainer, inducer, oxidizer (Turbopump inducer bolt) (LC)	1	1	
- 5		457998	. PLUG, Bolt, retainer, inducer, oxidizer (LC)	1	1	
- 6		459743	. WASHER, Lock (LC)	1	1	
- 7		457995	. WASHER, Thrust (LC)	1	1	
- 8		459738	. INDUCER ASSY, Oxidizer pump (Turbopump oxidizer inducer) (LC)	1	1	
- 9		RD111-1012-3722	. BOLT (LC)	36	36	
-10		458217	. WASHER, LOX inlet (LC)	36	36	
-11		459748	. INLET ASSY, Oxidizer pump (Turbopump oxidizer inlet) (LC)	1	1	
-12		AN814-2SL	. . PLUG AND BLEEDER (Supersedes AN814-2CL) (LC)	1	1	
-13		RE261-3004-0002	. . SEAL (Interchangeable with 12100CR2 MFD by 08199) (LC)	1	1	
		459745	. . INLET ASSY, Oxidizer (LC)	1	1	
-13A		KNY10050-2, SP	. . . INSERT (MFD by 29372) (LC)	1	1	
-13B		12120CR5	. . . SEAL (MFD by 08199) (LC)	1	1	
-13C		KNH20T14SP	. . . INSERT (MFD by 29372) (LC)	36	36	
-14		19-457986	. RING, Piston, LOX inlet (LC)	2	2	
-15		RD261-3010-0328	. SEAL (LC)	1	1	
-16		459742	. IMPELLER, Oxidizer (Turbopump oxidizer impeller) (LC)	1	1	
-17		459736	. SLEEVE, Spline, torque transmission and spacer, shrink fit, LOX impeller (Turbopump spline sleeve) (LC)	1	1	
-18		457980	. NUT, Oxidizer (LC)	1	1	
-19		457981	. LOCK, Nut, oxidizer (LC)	1	1	
-19		460179	. LOCK, Nut, oxidizer (LC)	1	1	
-20		457979	. RING, Mating, oxidizer (Turbopump primary oxidizer seal mating ring)(LC)	1	1	
-21		RD112-5001-1417	. SCREW (LC)	24	24	
-22		RD153-3003-0001	. WASHER (LC)	24	24	
-23		NA5-260066	. SEAL ASSY, Primary, oxidizer pump, face type, mark 16 (Turbopump primary oxidizer seal) (LC)	1	1	
-24		455650	. SPACER, Oxidizer seal (Set of 8 spacers using -3 through -19 as required) (LC)	1	1	
-25		458526	. GASKET, Mating ring, primary LOX seal (LC)	1	1	
-26		458577	. SLINGER, Oxidizer (LC)	1	1	
-27		458525	. GASKET, Slinger (LC)	1	1	
-28		AN104717	. BOLT (LC)	18	18	
-29		LD153-0013-0002	. WASHER (LC)	18	18	
-30		NA5-26863	. SEAL, Purged, intermediate, shaft-type, mark 10 (Turbopump intermediate seal) (LC)	1	1	
-31		MS29513-265	. PACKING (LC)	1	1	
		458774	VOLUTE ASSY, Oxidizer (LC)	1	1	
-32		KNH720T14SP	. . INSERT (MFD by 29372) (LC)	36	36	

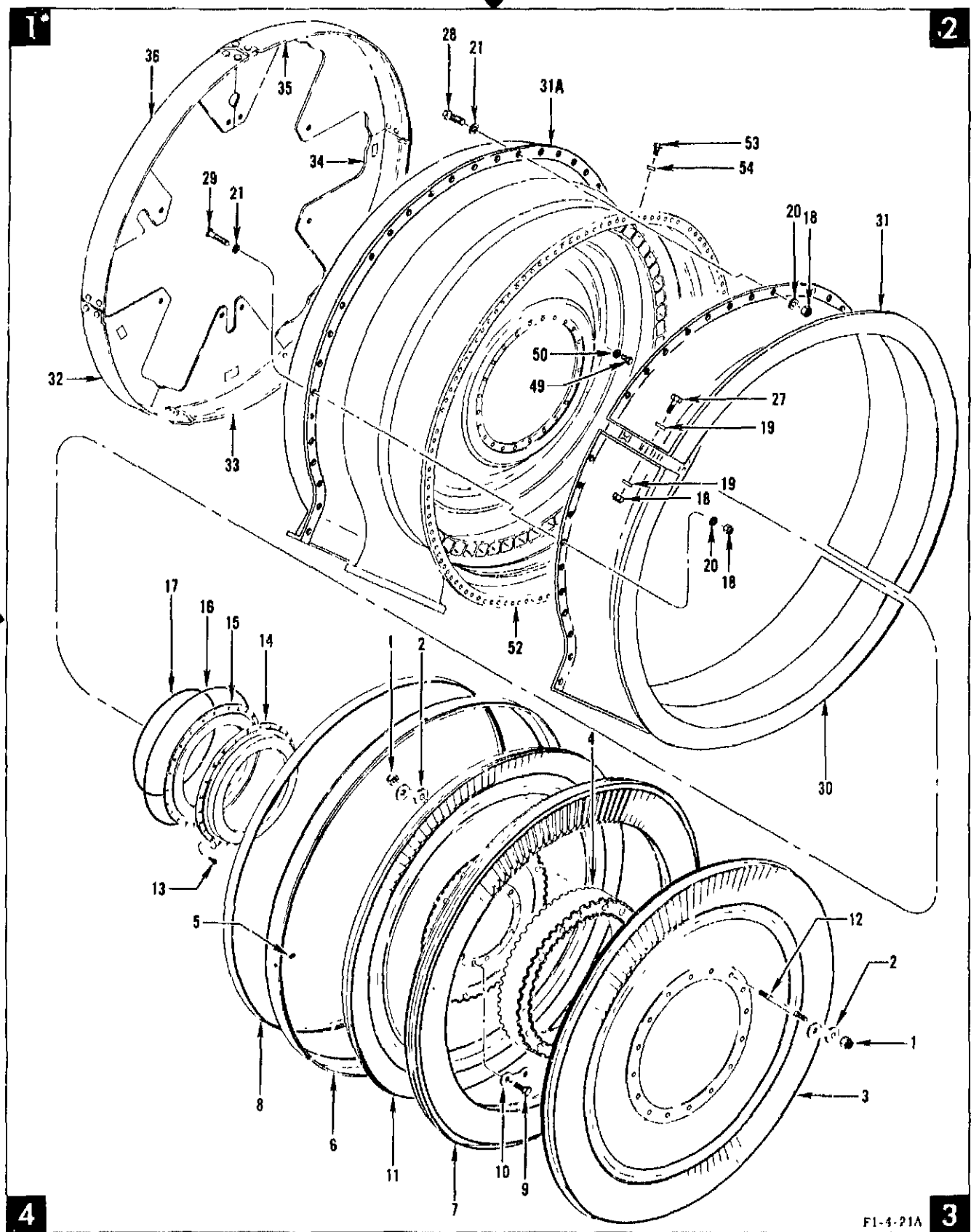

Figure 11. Turbopump Turbine Assembly (Sheet 1 of 2)

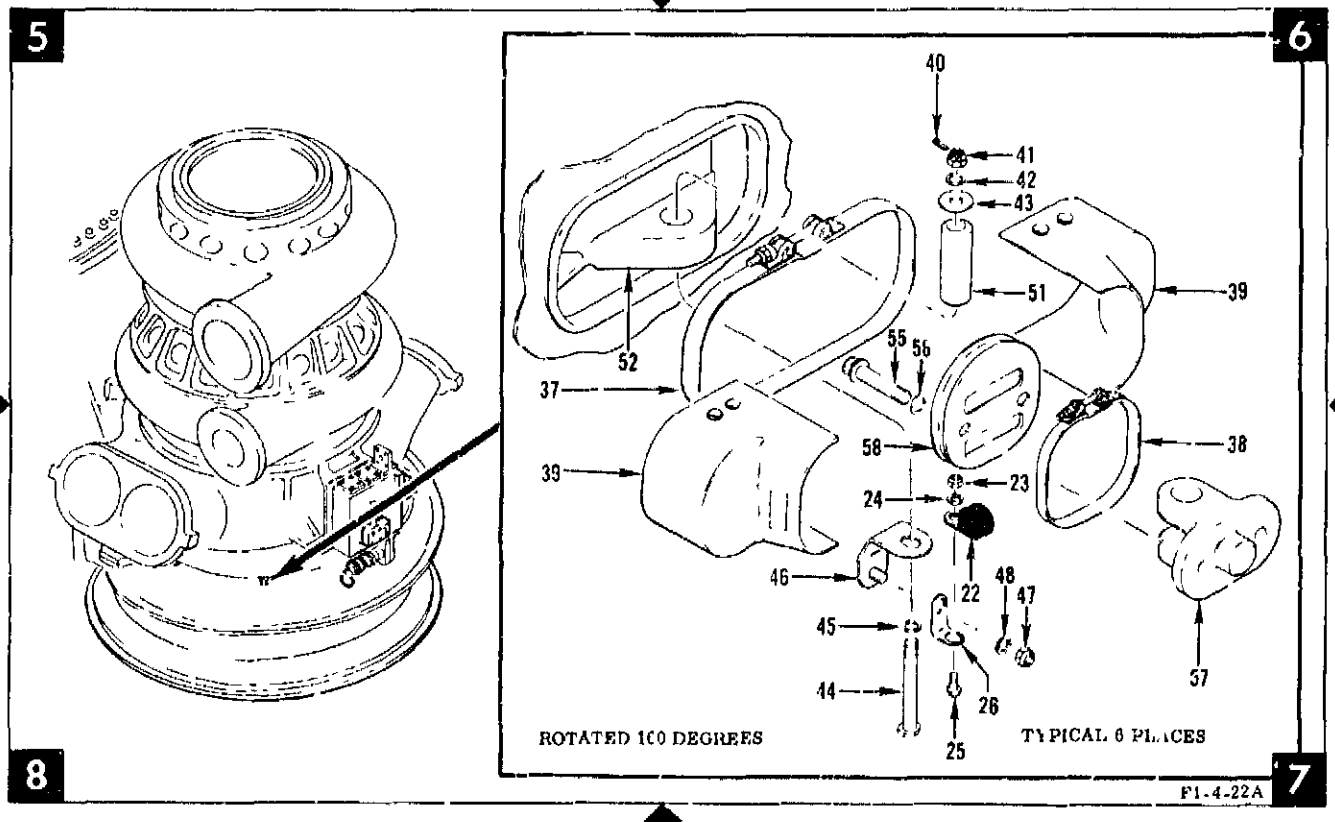

Figure 11. Turbopump Turbine Assembly (Sheet 2 of 2)

FIG & INDEX NO	ZONE NO	PART NUMBER	DESCRIPTION 1 2 3 4 5 6 7	UNITS PER ASSY		USABLE ON CODE
			TURBOPUMP TURBINE ASSEMBLY			
11-		458800-131	TURBOPUMP ASSY (See figure 6, index 180, for REQMT)	REF		
		458800-141	TURBOPUMP ASSY (See figure 6, index 180 for REQMT)	REF		
		458800-161	TURBOPUMP ASSY (See figure 6, index 180, for REQMT)	REF		
		458800-171	TURBOPUMP ASSY (See figure 6, index 180, for REQMT)		REF	
			PARTIAL BREAKDOWN FOLLOWS			
- 1	3,4	457080	. NUT, Bolt, turbine wheel (LC)	32	32	
- 2	3,4	457082	. LOCK, Tab, nut, turbine wheel (LC)	16	16	
- 3	3	457114	. WHEEL ASSY, Second stage turbine (LC)	1	1	
- 4	3	457115	. SPACER, Double curvic, turbine wheel (Turbine curvic spacer) (LC)	1	1	
- 5	4	453845	. SCREW, Lock, retainer (LC)	4	4	
- 6	4	457891	. RETAINER, Nozzle segment (LC)	1	1	
- 7	4	457501	. SEGMENT, Nozzle second-stage (Turbine second stage) (LC)	10	10	
- 8	4	460349	. SEAL ASSY, Honeycomb (Turbopump turbine honeycomb seal) (LC)	1	1	
- 9	3	RD111-1006-0916	. BOLT (LC)	12	12	
-10	3	157081	. LOCK, Tab, bolt, shaft, turbine wheel (LC)	6	6	
-11	4	457089	. WHEEL ASSY, First stage, turbine (LC)	1	1	
-12	3	457087	. BOLT, Turbine wheel (LC)	16	16	
-13	4	RD111-1007-0406	. BOLT (LC)	24	24	
-14	4	NA5-26385	. SEAL ASSY, Primary, turbine, shaft-type, mark 10 (Turbine primary hot-gas seal) (LC)	1	1	
-15	4	NA5-26384	. SEAL ASSY, Turbine, bearing lubricant, shaft-type, mark 10 (Turbine secondary hot-gas seal) (LC)	1	1	
-16	1	CGS13-15-238	. SEAL (MFD by 81400) (Alternate 10586 MFD by 07107) (LC)	1	1	
-17	1	CGS13-11-738	. SEAL (MFD by 81400) (LC)	1	1	
-18	1,2	MS20500-428	. NUT	51	51	
-19	1,2	MS15795-810	. WASHER	8	8	
-20	1,2	LD153-0010-0009	. WASHER	43	43	
-21	1,2	RD153-5001-0001	. WASHER	51	51	
-22	7	RE127-2009-0010	. CLAMP	1	1	
-23	7	NAS679A3W	. NUT	1	1	
-24	7	LD153-0011-0011	. WASHER	1	1	
-25	7	AN501-10-7	. SCREW	1	1	
-26	7	MS9102-03	. BRACKET	1	1	

FIG & INDEX NO	ZONE NO	PART NUMBER	DESCRIPTION 1 2 3 4 5 6 7	UNITS PER ASSY		USABLE ON CODE
11-27	2	NAS1004-3A	. BOLT	8	8	
-28	2	NAS1004-8A	. BOLT	38	38	
-29	1	NAS1004-10A	. BOLT	5	5	
-30	1	458749	. SHIELD ASSY, Half, manifold inlet	1	1	
-31	2	458748	. SHIELD ASSY, Lower half	1	1	
-31A	1	459539	. SHIELD ASSY, Turbine manifold	1		
-31A	1	460985	. SHIELD ASSY, Turbine manifold		1	
-32	1	457857-11	. INSULATION ASSY, Turbine manifold	1	1	
-33	1	457857-21	. INSULATION ASSY, Turbine manifold	1	1	
-34	2	457857-31	. INSULATION ASSY, Turbine manifold	1	1	
-35	1	457857-41	. INSULATION ASSY, Turbine manifold	1	1	
-36	1	457857-51	. INSULATION ASSY, Turbine manifold	1	1	
-37	5	MBC60461-718	. CLAMP (MFD by 70128)	6	6	
-38	7	MBC60161-487	. CLAMP (MFD by 70128)	6	6	
-39	7,8	458744	. COVER ASSY, Clevis, turbine manifold	12	12	
-40	6	MS9245-29	. PIN (LC)	6	6	
-41	6	AN320C4	. NUT (LC)	6	6	
-42	6	LD153-0010-0009	. WASHER (Use 5 maximum per application) (LC)	30		
-43	6	457867	. WASHER, Pin support, turbine manifold (LC)	6	6	
-44	7	NAS1004-44	. BOLT (LC)	6	6	
-45	7	RD153-5004-0004	. WASHER (LC)	6	6	
-46	7	460105	. DAMPENER ASSY, Heat shield (LC)	6	6	
-47	7	NAS679C4W	. NUT	6	6	
-48	7	LD153-0010-0009	. WASHER	6	6	
-49	2	RD111-1007-0405	. BOLT (LC)	24	24	
-50	2	LD153-0013-0002	. WASHER (LC)	24	24	
-51	6	460902-7 (a)	. PIN (Component of matched set 460902) (NHA 458800-131, -141, and -161) (LC)	6	6	
-52	2,5	460902	. MANIFOLD ASSY, Turbine-alinement (Turbine manifold) (Matched set) (LC)	1	1	
-53	2	AN814-4SL	. PLUG AND BLEEDER (Supersedes AN814-4CL) (LC)	1	1	
-54	2	RE261-3004-1004	. SEAL (Interchangeable with 12100AA4 MFD by 08199) (LC)	1	1	
-55	6	RD111-4010-3825	. BOLT (LC)	12	12	
-56	6	459254	. WASHER, Manifold-mounting, turbopump (LC)	12	12	
-57	7	460902-5 (a)	. CLEVIS, Manifold (Component of matched 460902) (NHA 458800-131, -141, and -161) (LC)	6	6	
-58	7	459541	. RETAINER ASSY, Bracket cover, manifold (LC)	6	6	

(a) Matched sets of component thereof.

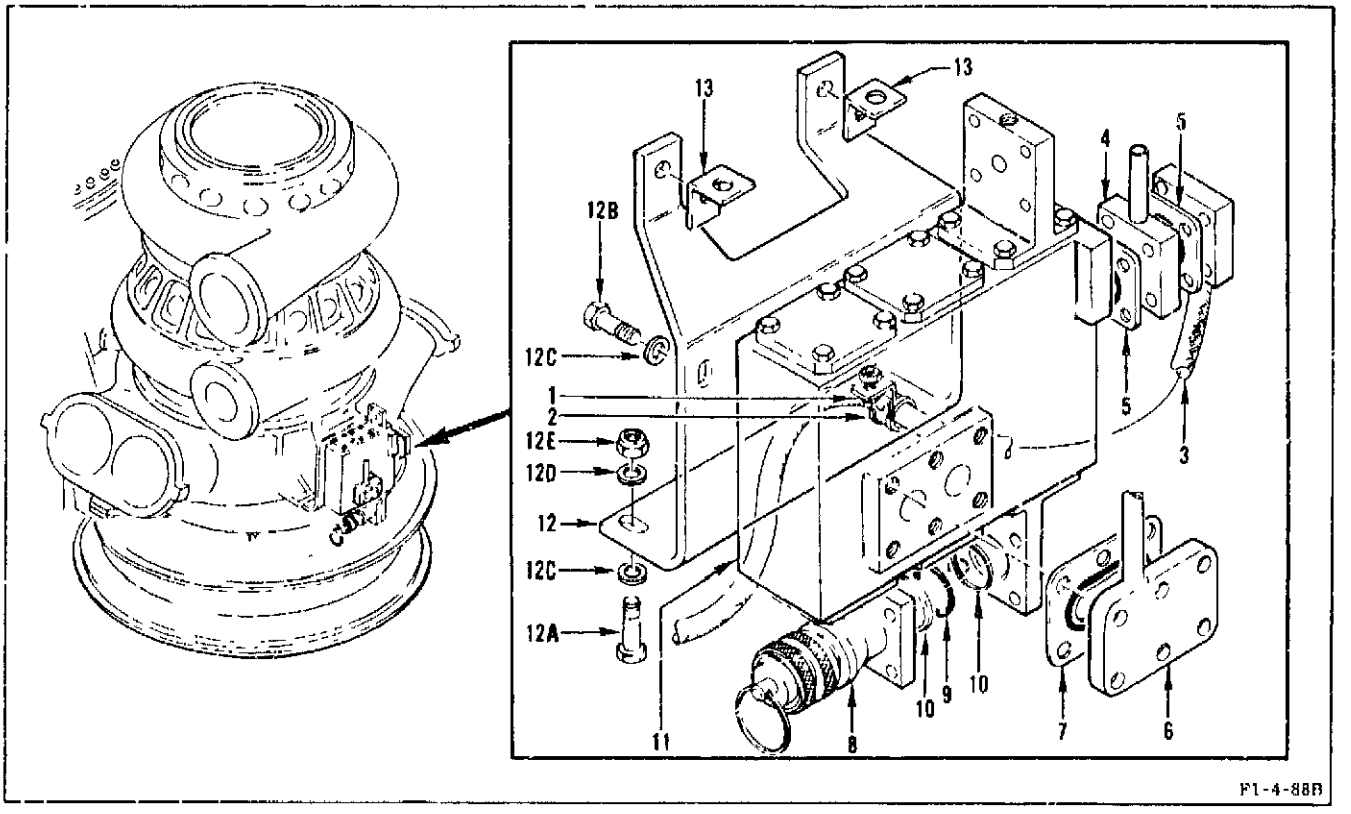

Figure 12. Turbopump Bearing Coolant Control Valve, Connecting Lines, and Supports

FIG & INDEX No	ZONE NO	PART NUMBER	DESCRIPTION 1 2 3 4 5 6 7	UNITS PER ASSY		USABLE ON CODE
			TURBOPUMP BEARING COOLANT CONTROL VALVE CONNECTING LINES AND SUPPORTS			
12-		458800-131	TURBOPUMP ASSY (See figure 6, index 180, for REQMT)	REF		
		458800-141	TURBOPUMP ASSY (See figure 6, index 180, for REQMT)	REF		
		458800-161	TURBOPUMP ASSY (See figure 6, index 180, for REQMT)	REF		
		458800-171	TURBOPUMP ASSY (See figure 6, index 180, for REQMT)		REF	
			PARTIAL BREAKDOWN FOLLOWS			
- 1		457349-13	. CLAMP, Bracket	1		
- 2		RL127-2009-0011	. CLAMP	1		
		AN501A10-7	. SCREW (AP)	1		
		LD153-0011-0011	. WASHER (AP)	1		
		NAS679A3W	. NUT (AP)	1		
		459164	. SUPPORT ASSY, Bearing, turbine	1		
		460984	. SUPPORT ASSY, Bearing, turbine		1	
- 3		19-457645	. . HOSE ASSY, Lube feed, lube valve to turbine bearing support (LC)	NP		
		RD111-1011-6429	. . BOLT (AP)	4		
		RD153-5004-0004	. . WASHER (AP)	4		
- 4		460982	. TUBE ASSY, Valve to NO 1 and NO. 2 bearings lube feed (LC)		1	
		RD111-1011-6419	. . BOLT (AP)		4	
		RD153-5004-0004	. . WASHER (AP)		4	
- 5		19-406332-5	. SEAL ASSY, Plate (LC)	2	1	
- 6		458777	. TUBE ASSY, Fuel volute to valve, lube feed (Welded) (Coolant supply tube) (LC)	1	1	
		RD111-1009-6316	. BOLT (AP)	6	6	
		RD153-5004-0003	. WASHER (AP)	6	6	
- 7		19-459273	. SEAL ASSY, Plate, fuel (LC)	1	1	
- 8		NA5-260079T6	. COUPLING ASSY, High temperature, flight half (Preservative inlet quick disconnect) (LC)	1	1	
		RD111-1011-6413	. BOLT (AP)	4	4	
		RD153-5004-0004	. WASHER (AP)	4	4	
- 9		RD262-4006-0013	. O RING (LC)	1	1	
-10		MS28774-018	. RETAINER (LC)	2	2	
-11		558075	. VALVE ASSY, Bearing coolant control (See figure 14 for breakdown) (LC)	1		
-11		558075-11	. VALVE ASSY, Bearing coolant control (See figure 14 for breakdown) (LC)		1	
-12		458797	. BRACKET, Lube system valve	1	1	

FIG. & INDEX NO	ZONE NO	PART NUMBER	1 2 3 4 5 6 7 DESCRIPTION	UNITS PER ASSY		USABLE ON CODE
12-12A		AN101114	. BOLT (AP)	4	4	
-12B		RD111-1011-6413	. BOLT (AP)	4	4	
-12C		RD153-5004-0004	. WASHER (AP)	8	8	
-12D		LD153-0010-C01C	. WASHER (AP)	4	4	
-12E		NAS679A4W	. NUT (AP)	4	4	
-13		MS9102-33	. BRACKET	2	2	
		RD111-1011-6413	. BOLT (AP)	2	2	
		RD153-5004-0004	. WASHER (AP)	2	2	

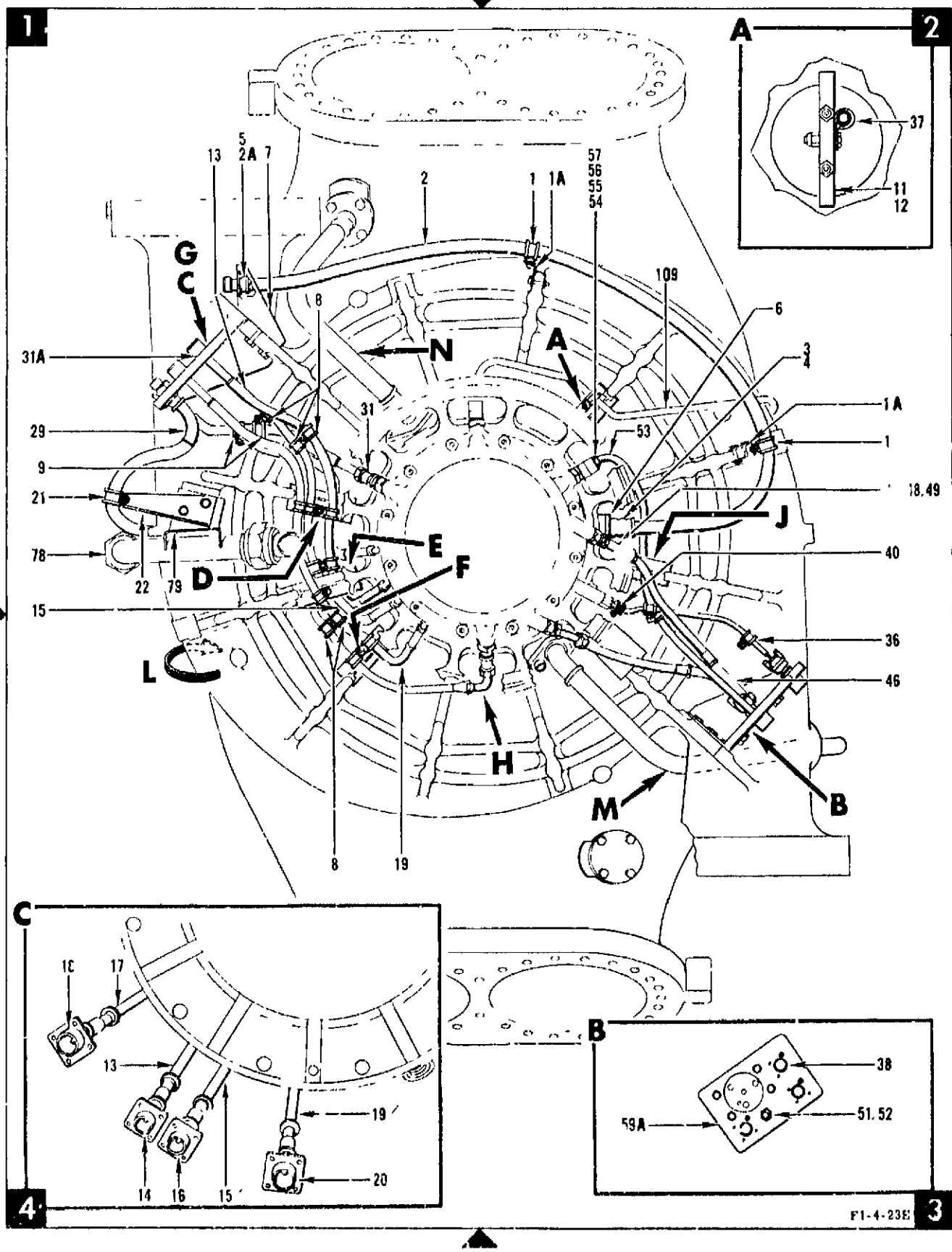

Figure 13. Turbopump Electrical and Fuel Lines (Sheet 1 of 4)

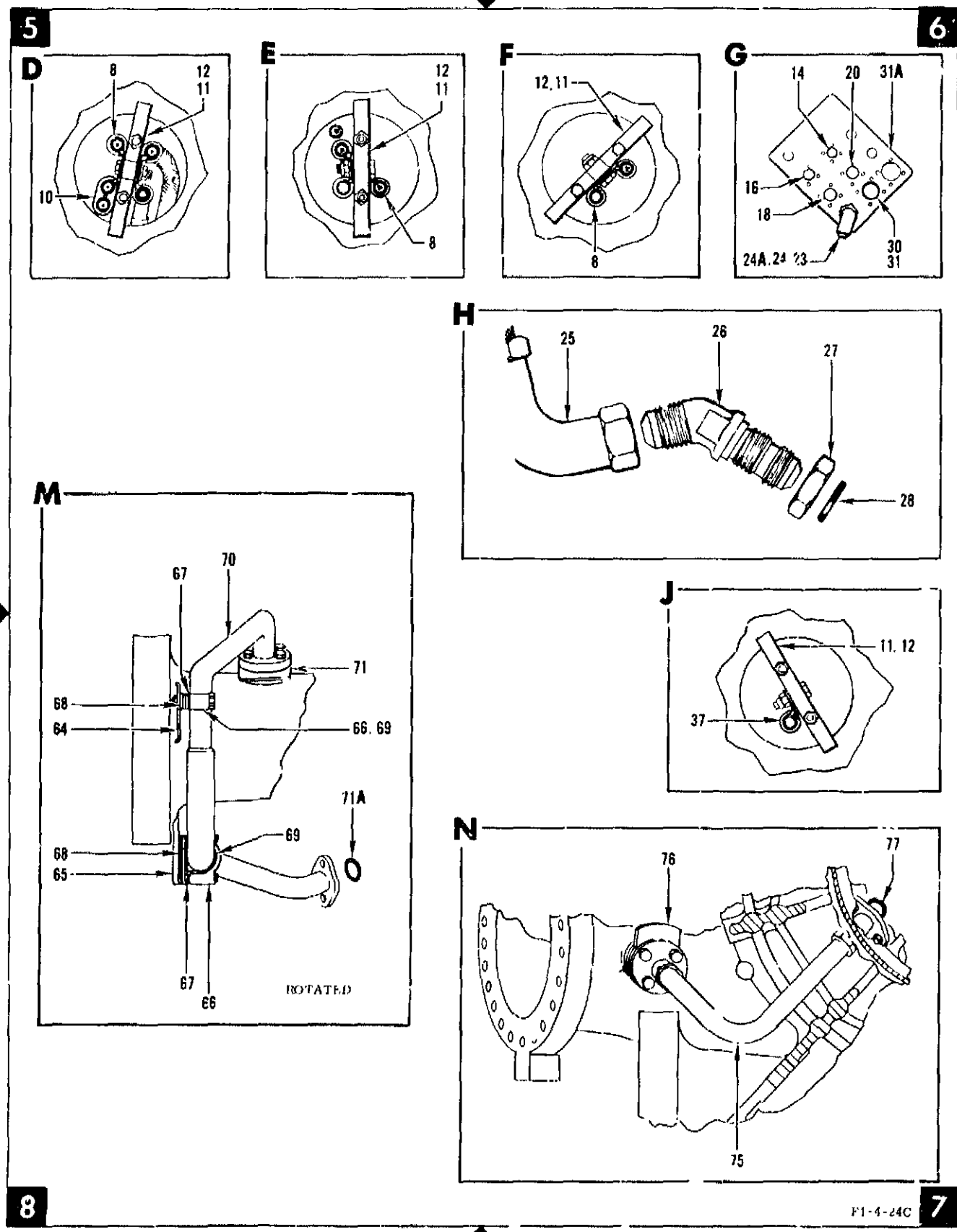

Figure 13. Turbopump Electrical and Fuel Lines (Sheet 2 of 4)

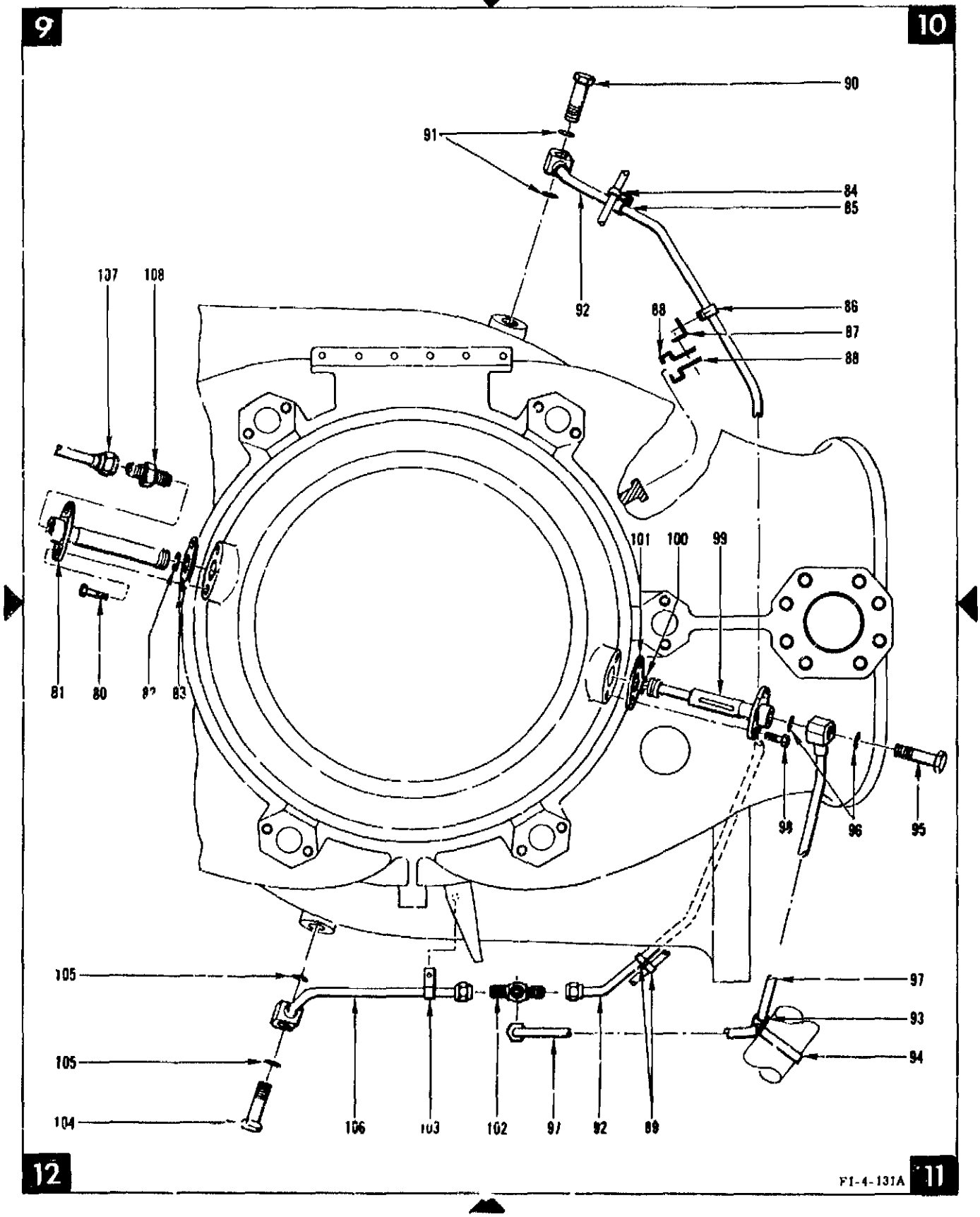

Figure 13. Turbopump Electrical and Fuel Lines (Sheet 3 of 4)

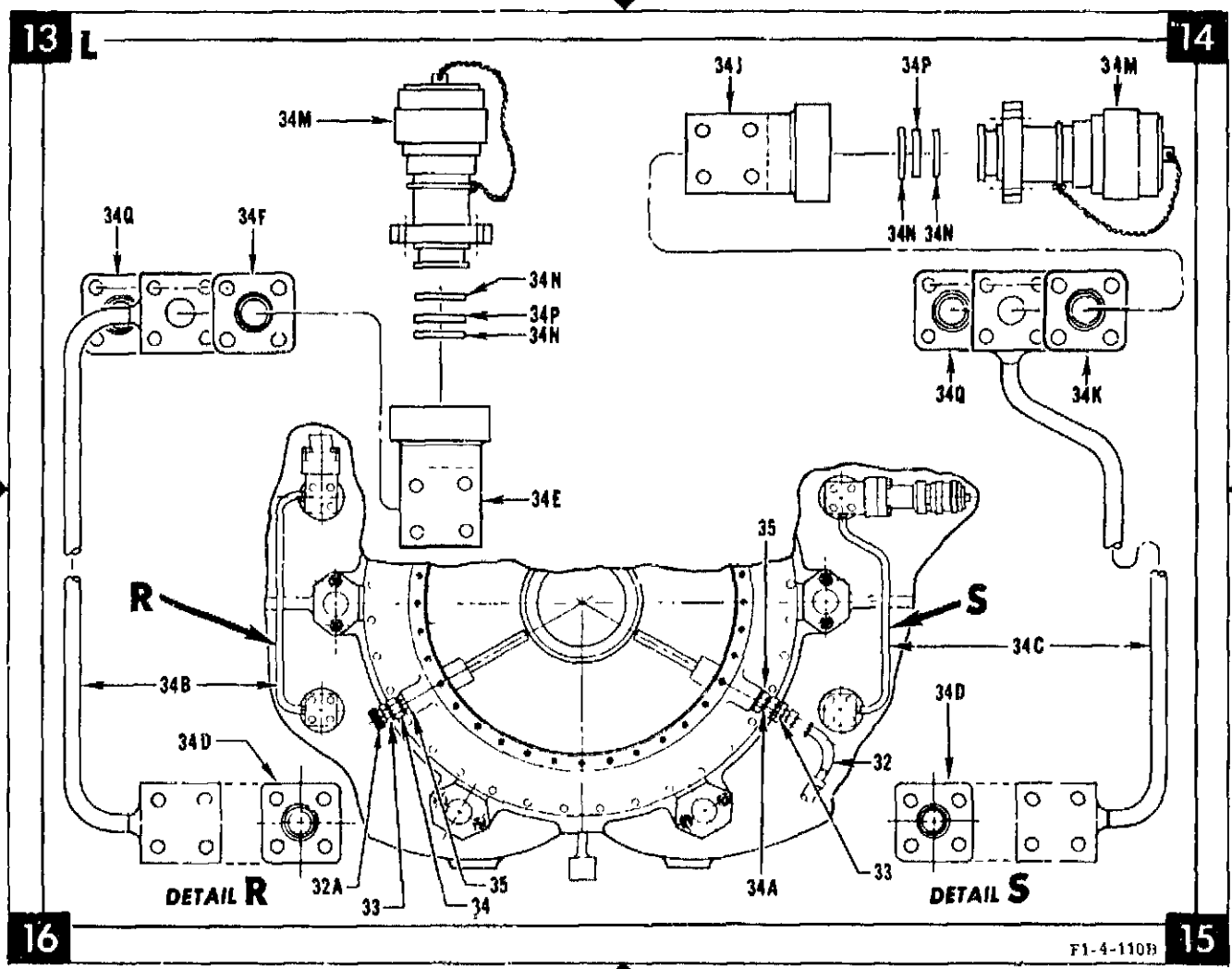

Figure 13. Turbopump Electrical and Fuel Lines (Sheet 4 of 4)

FIG & INDEX NO	ZONE NO	PART NUMBER	DESCRIPTION 1 2 3 4 5 6 7	UNITS PER ASSY	USABLE ON CODE
			TURBOPUMP ELECTRICAL AND FUEL BALANCE LINES		
13-		458800-131	TURBOPUMP ASSY (Electrical) (See figure 6, index 180, for REQMT)	REF	
		458800-141	TURBOPUMP ASSY (Electrical) (See figure 6, index 180, for REQMT)	REF	
		458800 161	TURBOPUMP ASSY (Electrical) (See figure 6, index 180, for REQMT)	REF	
		458800-171	TURBOPUMP ASSY (Electrical) (See figure 6, index 180, for REQMT)	REF	
			PARTIAL BREAKDOWN FOLLOWS		
- 1	2	RE127-2009-0009	. CLAMP	2	
		AN501D10-7	. SCREW (AP)	1	
		LD153-0010-0007	. WASHER (AP)	1	
		NAS679A3W	. NUT (AP)	1	
- 1A	2	458513	. CLIP, Accessory mounting	2	
		AN101019	. BOLT (AP)	1	
		LD153-0010-0007	. WASHER (AP)	1	
		NAS679A3W	. NUT (AP)	1	
- 2	1	502941	. ARMORED CABLE ASSY, Flexible, thermostat package	1	
		AN515C4-10	. SCREW (AP)	4	
		LD153-0011-0006	. WASHER (AP)	4	
		RD191-4002-1002	. LUG (AP)	1	
		NAS679C04W	. NUT (AP)	4	
		19 704549-3	. . MOLDING, Heat shrinkable	2	
- 2A	1	502936-111	. . RECEPTACLE ASSY, Electrical, 14S-5P shell size (Altered from NAS-27550T145P) (Turbopump interface) (J75)	1	

FIG. & INDEX NO	ZONE NO	PART NUMBER	DESCRIPTION 1 2 3 4 5 6 7	UNITS PER ASSY	USABLE ON CODE
13- 3	2	502935-91	. . PLUG ASSY, Electrical, 14S-2S shell size (Altered from NA5-27556T142S) (Turbopump thermostat) (P175)	1	
- 4	2	19-501743-3	. BOOT, Armored harness, flexible	1	
- 5	1	19-501743-13	. BOOT, Armored harness, flexible	1	
- 6	2	NA5-27311	. THERMOSTAT, Package, hermetically sealed (Turbopump thermostat) (J175)	1	
		NAS1101C3H7	. SCREW (AP)	2	
		RD191-4002-0004	. LUG (AP)	1	
- 7	1	460065	. BRACKET ASSY, Support, thermostat (Welded)	1	
		AN101124	. BOLT (AP)	3	
		LD153-0011-0013	. WASHER (AP)	3	
		LD153-0011-0014	. WASHER (AP)	6	
		NAS679A4W	. NUT (AP)	3	
- 8	1,4,5,6	RE127-2005-0007	. CLAMP	16	
- 9	1	RE127-2005-0008	. CLAMP	2	
		NAS1003-1A	. BOLT (AP)	1	
		LD153-0011-0011	. WASHER (AP)	1	
		NAS679A3W	. NUT (AP)	1	
-10	5	TAB32WSS2-7HT	. CLAMP (MFD by 84971)	1	
-11	5,6,7	457206	. BRACKET, Line support	5	
-12	5,6,7	457207	. BRACKET, Line support	5	
		NAS563-63	. BOLT (AP)	2	
		LD153-0011-0011	. WASHER (AP)	4	
		NAS679A3W	. NUT (AP)	2	
		459175	. RETAINER ASSY, Bearing (Heater unit)	1	
		MS20006-76	. BOLT (AP)	12	
		600-201-3/8	. SEAL (MFD by 83259) (AP)	12	
-13	1,4	No Number	. . LINE ASSY, NO. 2 bearing heater (Welded)	1	
-14	4,6	NA5-27185T15	. . RECEPTACLE ASSY, Electrical, 8S-1P shell size (Turbopump heater NO. 2) (Welded) (J87)	1	
-15	1,4	No Number	. . LINE ASSY, NO. 2 bearing heater (Welded)	1	
-16	4,6	NA5-27185T15	. . RECEPTACLE ASSY, Electrical, 8S-1P shell size (Turbopump heater NO. 2) (Welded) (J88)	1	
-17	4	No Number	. . LINE ASSY, NO. 1 bearing heater (Welded)	1	
-18	4,6	NA5-27185T17	. . RECEPTACLE ASSY, Electrical, 10S-2P shell size (Turbopump heater NO. 1) (Welded) (J85)	1	
-19	4	No Number	. . LINE ASSY, NO. 1 bearing (Welded)	1	
-20	4,6	NA5-27185T17	. . RECEPTACLE ASSY, Electrical, 10S-2P shell size (Turbopump heater NO. 1) (Welded) (J86)	1	
		AN515C4-8	. . SCREW (AP)	4	
		LD153-0011-0006	. . WASHER (AP)	4	
		RD191-4002-1002	. . LUG (AP)	1	
		NAS679C04W	. . NUT (AP)	4	
-21	1	RE127-2009-0010	. CLAMP	1	
		AN520C10R7	. SCREW (AP)	1	
		LD153-0011-0011	. WASHER (AP)	1	
		NAS679A3W	. NUT (AP)	1	
-22	1	458787	. BRACKET, Support	1	
-23	6	AN833-8J	. ELBOW (Supersedes AN833-8C) (LC)	1	
-24	6	AN924-8J	. NUT (Supersedes AN924-8C) (LC)	1	
-24A	6	MS15795-822	. WASHER	1	
-25	6	19-456356	. HOSE ASSY, Oil purge drain (LC)	1	
-26	6	AN837-8J	. ELBOW (Supersedes AN837-8C) (LC)	2	
-27	6	AN924-8J	. NUT (Supersedes AN924-8C)	2	
-28	6	MS28778-8	. PACKING (LC)	2	
-29	1	19-501745-12	. BOOT, Electrical, 90 degree	1	
		704542	. CABLE ASSY, Armored, flexible, monitor magnetic pickup	1	
		AN515C4-7	. SCREW (AP)	4	
		LD153-0011-0006	. WASHER (AP)	4	
		RD191-4002-1002	. LUG (AP)	1	
		NAS679C04W	. NUT (AP)	4	
		19-704548-2	. . TUBE, Heat shrinkable	3	
-30	6	502938-131	. . RECEPTACLE ASSY, Electrical, 14S-6P shell size (Altered from NA5-27550T146P) (Turbopump interface) (J130)	1	
-31	1,6	502937-91	. . PLUG ASSY, Electrical, 14S-2S shell size (Altered from NA5-27556T142S) (Turbopump RPM NO. 1) (P230)	1	
-31A	1,6	460061	. PANEL, Connector, lower (NHA 458800-141)	1	
-31A	1,6	460904	. PANEL, Connector, lower (NHA 458800-131, -161, and -171)	1	
		AN101124	. BOLT (AP)	3	
		LD153-0011-0013	. WASHER (AP)	3	
		NAS679A4W	. NUT (AP)	3	
-32	15	19-501745-3	. BOOT, Electrical, 90 degree	1	
-32A	16	MS25043-14	. CAP	1	
-33	15,16	457346	. NUT, Jam, drilled	2	
-34	16	NA5-27330	. TRANSDUCER, Speed sensing, dual element high temperature (Turbopump RPM transducer) (NO. 1)	1	
-34A	15	NA5-27330	. TRANSDUCER, Speed sensing, dual element high temperature (Turbopump RPM transducer) (NO. 2)	1	
-34B	16	458789	. TUBE ASSY, Inlet drain, NO. 1 fuel (Welded) (LC)	1	

FIG & INDEX NO	ZONE NO	PART NUMBER	DESCRIPTION 1 2 3 4 5 6 7	UNITS PER ASSY	USABLE ON CODE
13-34C	15	458790	. TUBE ASSY, Inlet drain, NO. 2 fuel (Welded) (LC)	1	
		RD111-1009-6417	. BOLT (AP)	4	
		RD153-5004-0004	. WASHER (AP)	4	
		RD172-0002-0001	. . TAPE (ROCKET FUEL)	AR	
		RD172-0014-0033	. . TAPE (RP-1)	AR	
		RD172-0014-0040	. . TAPE (DRAIN)	AR	
		RD172-0018-0200	. . TAPE (300 PSI)	AR	
-34D	15,16	19-406332-29	. SEAL ASSY, Plate (LC)	2	
-34E	16	458791	. ADAPTER, Fuel inlet drain (NO. 1) (LC)	1	
		RD111-1009-6429	. BOLT (AP)	4	
		RD153-5004-0004	. WASHER (AP)	4	
-34F	13	19-406332-29	. SEAL ASSY, Plate (LC)	1	
-34G		DELETED			
-34H		DELETED			
-34J	14	458791	. ADAPTER, Fuel inlet drain (NO. 2) (LC)	1	
		RD111-1009-6429	. BOLT (AP)	4	
		RD153-5004-0004	. WASHER (AP)	4	
-34K	15	19-406332-29	. SEAL ASSY, Plate (LC)	1	
-34L		DELETED			
-34M	13,14	NA5-260078T3	. COUPLING ASSY, High temperature, flight half (NO. 1 and NO. 2 fuel inlet elbow drain quick-disconnect) (LC)	2	
		RD111-1009-0517	. BOLT (AP)	4	
		RD153-5004-0005	. WASHER (AP)	4	
-34N	13,14	MS28774-023	. RETAINER (LC)	4	
-34P		DELETED			
-34Q	13,14	19-406332-29	. SEAL ASSY, Plate (LC)	2	
-35	15,16	MS29513-015	. PACKING (LC)	2	
-36	3	RE127-2005-0005	. CLAMP	5	
-37	2,7	RE127-2005-0006	. CLAMP	2	
		NAS1003-6A	. BOLT (AP)	1	
		NAS1003-1A	. BOLT (AP)	1	
		LD153-0011-0011	. WASHER (AP)	1	
		NAS679A3W	. NUT (AP)	1	
-38	3	NA5-27333T7	. TRANSDUCER, Resistance type, 0-800 degrees (Oxidizer pump bearing temperature transducer NO. 1) (Tap LS1) (J134)	1	
-39		DELETED			
-40	2,3	MS29512-03	. PACKING	2	
-41 THRU -45		DELETED			
-46	3	19-459172	. HOSE ASSY, Drain, NO. 1 bearing lubricant seal (LC)	1	
-47	2	459174	. ADAPTER, Drain, lubricant seal, NO. 1 bearing, retainer (LC)	2	
-48	2	RD262-4006-0010	. GASKET (LC)	2	
-49	2	RD262-3001-0004	. GASKET (LC)	2	
-50	3	RD262-4006-0010	. GASKET (LC)	1	
-51	3	AN924-6J	. NUT (Supersedes AN924-6C)	1	
-52	3	459173	. ADAPTER, Drain, lubricant seal, NO. 1 bearing, upper panel (LC)	1	
-53	2	460062	. TUBE ASSY, Purge in (Welded) (LC)	1	
		AN101109	. BOLT (AP)	4	
		LD153-0011-0013	. WASHER (AP)	4	
		NAS679A4W	. NUT (AP)	4	
-54	2	MS28778-6	. PACKING (LC)	1	
-55	2	458796	. FITTING, Lube, bearing retainer, turbopump (LC)	1	
-56	2	MS29513-013	. PACKING (LC)	1	
-57	2	AN924-6J	. NUT (Supersedes AI 924-6C) (LC)	1	
-58		DELETED			
-59		DELETED			
-59A	3	459168	. PANEL, Connector, upper	1	
		AN4-13A	. BOLT (AP)	3	
		LD153-0011-0013	. WASHER (AP)	6	
		NAS679A4W	. NUT (AP)	3	
-60 THRU -63		DELETED			
-64	10	460868	. BRACKET, Supply line, balance cavity (NHA 458800-131 and -141)	1	
-64	10	461023	. BRACKET, Supply line, balance cavity (NHA 458800-161 and -171)	1	
		RD111-4016-1036	. BOLT (AP)	2	
		RD153-0113-0108	. WASHER (AP)	2	
		409203	. WASHER, 5/8 bolt (AP)	2	
		RD114-1001-0010	. NUT (AP)	2	
-65	5,8	460869	. BRACKET, Supply line, balance cavity (NHA 458800-131 and -141)	1	
-65	5,8	461024	. BRACKET, Supply line, balance cavity (NHA 458800-161 and -171)	1	
		RD111-4010-6508	. BOLT (AP)	2	
		RD153-5002-0005	. WASHER (AP)	2	
		409203	. WASHER 5/8 bolt (AP)	2	
-66	5,8	460870	. CLAMP, Supply line, balance cavity	1	
		NAS1004-25A	. BOLT (AP)	2	

FIG & INDEX NO	ZONE NO	PART NUMBER	DESCRIPTION 1 2 3 4 5 6 7	UNITS PER ASSY	USABLE ON CODE
13-		RD153-5004-0004	. WASHER (AP)	2	
		RD153-1002-0004	. WASHER (AP)	2	
		RD114 8003-1004	. NUT (AP)	2	
-67	5,0	460871	. CLAMP, Supply line, balance cavity	1	
-68	5,8	460875	. SHIM, Supply line, balance cavity	1	
-69	5,8	RE127-2002-0012	. CLAMP	1	
-70	5	460316	. TUBE ASSY, High pressure, balance cavity (Fuel impeller balance cavity supply tube) (Welded) (NHA 458800-131 and -141) (LC)	1	
		RD172-0014-0033	. . TAPE (RP-1)	AR	
		RD172-0018-3000	. . TAPE (3000 PSI)	AR	
-70	5	19-461020	. TUBE ASSY, High pressure, balance cavity (Welded) (Turbopump fuel impeller balance cavity supply tube)(NHA 458800-161 and -171)(LC)	1	
		RD111-1009-6417	. BOLT (AP)	4	
		MS20006-12	. BOLT (AP)	2	
		RD153 5001-0001	. WASHER (AP)	4	
		RD172-0014-0033	. . TAPE (RP-1)	AR	
		RD172-0018-0400	. . TAPE (400 PSI)	AR	
-71	5	RD251-4087-XXXX	. ORIFICE PLATE (Orifice size determined by calibration tests) (Turbopump fuel impeller balance cavity supply orifice) (LC)	1	
71A -72 THRU -74	5,8	MS29513-121	. PACKING (LC)	1	
		DELETED			
-75	7	19 458784	. HOSE ASSY, Balance line, turbopump (Welded) (Turbopump fuel impeller balance cavity return hose) (LC)	1	
		MS20006 6	. BOLT (AP)	2	
		MS20004H10	. BOLT (AP)	4	
		MS20002C4	. WASHER (AP)	4	
-76	7	RD251-5001 XXXX	. ORIFICE PLATE (Turbopump fuel impeller balance cavity return orifice) (Orifice size determined by calibration tests) (LC)	1	
-77	7	MS29513-121	. PACKING (LC)	1	
-78	1	456359	. TUBE ASSY, Drain, liquid oxygen (Oxidizer drain tube) (LC)	1	
-78	1	456359-11	. TUBE ASSY, Drain, liquid oxygen (Oxidizer drain tube) (Used on engine F-2066 only) (LC)	1	
		AN818-20J	. . NUT (Supersedes AN818-20C)	1	
		MS20819-20J	. . SLEEVE (Supersedes MS20819-20C)	1	
		RD172-0014-0027	. . TAPE (LIQUID OXYGEN)	AR	
-79	1	456369	. BRACKET, Drain tube	1	
		AN104706	. BOLT (AP)	2	
		NAS1004-14A	. BOLT (AP)	2	
		LD153-0010-0010	. WASHER (AP)	3	
		RD153-5004-0004	. WASHER (AP)	2	
		NAS679C4W	. NUT (AP)	4	
-80	12	AN104707	. BOLT	2	FAA
-81	12	460873	. TUBE, Drain, seal, fuel inlet (LC)	1	FAA
-82	12	MS29513-210	. PACKING (LC)	1	FAA
-83	10	453832	. GASKET, Drain tube, fuel inlet (LC)	1	FAA
-84	10	RE127-2001-0004	. CLAMP	1	FAA
-85	10	RE127-2001-0006	. CLAMP	1	FAA
		NAS43HT3-26	. SPACER (AP)	1	FAA
		AN520C10R16	. SCREW (AP)	1	FAA
		LD153-0010-0008	. WASHER (AP)	1	FAA
		NAS679C3W	. NUT (AP)	1	FAA
-86	10	RE127-2001-0006	. CLAMP	1	FAA
-87	10	MS9102-03	. BRACKET	1	FAA
		AN520C1038	. SCREW (AP)	1	FAA
		LD153-0010-0008	. WASHER (AP)	1	FAA
		NAS679C3W	. NUT (AP)	1	FAA
-88	10	460988	. BRACKET, Tube support	2	FAA
		AN520C10R8	. SCREW (AP)	1	FAA
		LD153-0010-0008	. WASHER (AP)	1	FAA
		NAS679C3W	. NUT (AP)	1	FAA
-89	11	RE127-2001-0006	. CLAMP	2	FAA
		AN520C10R8	. SCREW (AP)	1	FAA
		LD153-0010-0007	. WASHER (AP)	1	FAA
		NAS679C3W	. NUT (AP)	1	FAA
-90	10	500103C8	. BOLT, Universal fitting (MFD by 08199) (LC)	1	FAA
-91	9	12120AL8	. SEAL (MFD by 08199) (LC)	2	FAA
-92	10, 11	460976	TUBE ASSY, Lub feed, turbine bearing, T1 (LC)	1	FAA
		459272	. . NUT, Coupling, drilled	1	FAA
		MS20819-8J	. . SLEEVE (Supersedes MS20819-8C)	1	FAA
		RD172-0014-0033	. . TAPE (RP-1)	AR	FAA
		RD172-0018-0050	. . TAPE (50 PSI)	AR	FAA
-93	11	RE127-2001-0006	. CLAMP	1	FAA
-94	11	RE127-2001-0033	. CLAMP	1	FAA
		AN520C10R8	. SCREW (AP)	1	FAA
		LD153-0010-0007	. WASHER (AP)	1	FAA
		NAS679C3W	. NUT (AP)	1	FAA
-95	11	500103C8	. BOLT, Universal fitting (MFD by 08199) (LC)	1	FAA

FIG. & INDEX NO	ZONE NO	PART NUMBER	DESCRIPTION 1 2 3 4 5 6 7	UNITS PER ASSY	USABLE ON CODE
13- 96	11	12120AL8	. SEAL (MFD by 08199) (LC)	2	FAA
- 97	11	460977	. TUBE ASSY, Lub feed, turbine bearing, T2 (LC)	1	FAA
		459272	. . NUT, Coupling, drilled	1	FAA
		MS20819-8J	. . SLEEVE (Supersedes MS20819-8C)	1	FAA
		RD172-0014-0033	. . TAPE (RP-1)	AR	FAA
		RD172-0018-0050	. TAPE (50 PSI)	AR	FAA
- 98	11	AN104707	. BOLT	2	FAA
- 99	10	460980	. TUBE, Lubricant feed, turbine bearing (LC)	1	FAA
-100	10	MS29513-210	. PACKING (LC)	1	FAA
-101	10	453832	. GASKET, Drain tube, fuel inlet (LC)	1	FAA
-102	11	AN824-8J	. TEE (Supersedes AN824-8C)(LC)	1	FAA
-103	12	RE127-2001-0006	. CLAMP	1	FAA
		NAS43HT3-40	. SPACER (AP)	1	FAA
		AN520C1[illegible]R20	. SCREW (AP)	1	FAA
		LD153-0010-0007	. WASHER (AP)	1	FAA
		LD153-0010-0008	. WASHER (AP)	1	FAA
		NAS679C3W	. NUT (AP)	1	FAA
-104	12	500103C8	. BOLT, Universal fitting (MFD by 08199) (LC)	1	FAA
-105	12	12120AL8	. SEAL (MFD by 08199) (LC)	3	FAA
-106	12	460978	. TUBE ASSY, Lub feed, turbine bearing, T3 (LC)	1	FAA
		459272	. . NUT, Coupling, drilled	1	FAA
		MS20819-8J	. . SLEEVE (Supersedes MS20819-8C)	1	FAA
		RD172-0014-0033	. . TAPE (RP-1)	AR	FAA
		RD172-0018-0050	. . TAPE (50 PSI)	AR	FAA
-107	9	410807	TUBE ASSY, Fuel inlet seal drain, NO. 1 side (See figure 6, index 11A, for REQMT) (LC)	REF	
-108	9	AN815-8J	UNION (Supersedes AN815-8C) (See figure 6, index 12A, for REQMT) (LC)	REF	
-109	2	460982	TUBE ASSY, Valve to NO. 1 and NO. 2 bearings lube feed (See figure 12, index 4, for REQMT) (LC)	REF	

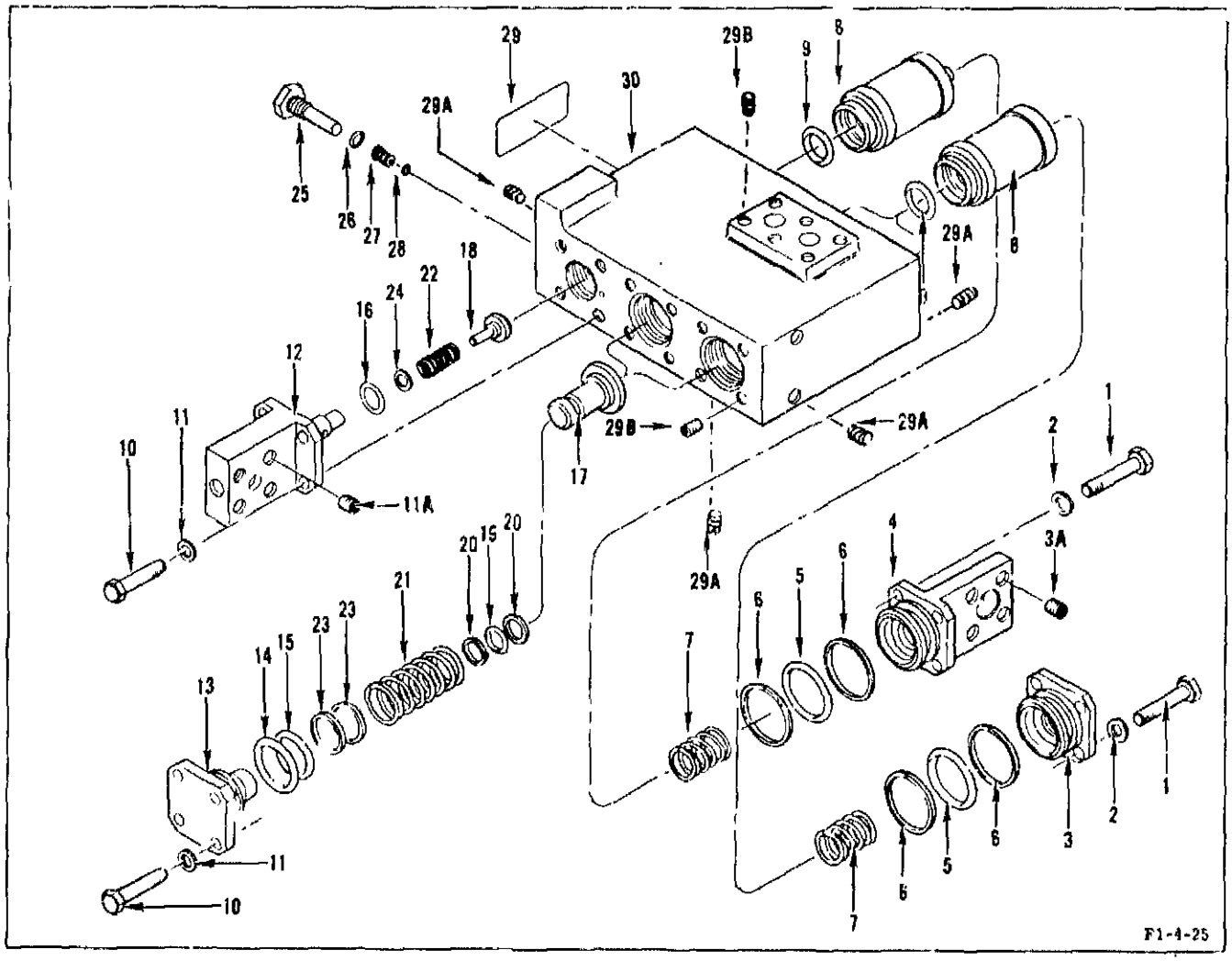

Figure 14. Bearing Coolant Control Valve Assembly (Three Filter Type)

FIG & INDEX NO	ZONE NO	PART NUMBER	1 2 3 4 5 6 7 DESCRIPTION	UNITS PER ASSY	USABLE ON CODE
14-		558075	VALVE ASSY, Bearing coolant control (See figure 12, ind x 11 for REQMT) (LC).	REF	
		558075-11	VALVE ASSY, Bearing coolant control (See figure 12, index 11 for REQMT) (LC).	REF	
- 1		AN4116A	. BOLT	12	
- 2		LD153-0011-0014	. WASHER	12	
- 3		556918	. CAP, Bearing coolant control valve (LC)	2	
		556922	. FITTING ASSY, Bearing coolant control valve (LC)	1	
- 3A		KN428SP	. . INSERT (MFG by 29372) (LC)	4	
		MS51923-49	. . PIN (LC)	1	
- 4		556922-3	. . FITTING, Bearing coolant control valve (LC)	1	
- 5		MS29513-128	. PACKING (LC)	3	
- 6		MS29774-128	. RING (LC)	6	
- 7		555111	. SPRING, Compression, bearing coolant control valve (LC)	3	
- 8		NAS-28057	FILTER ELEMENT ASSY (LC)	3	
- 9		MS29513-212	. PACKING (LC)	3	
-10		AN3105A	. BOLT	12	
-11		LD153-0011-0011	. WASHER	12	
		556919	. PLATE, Fit ASSY, Bearing coolant control valve (LC)	1	
-11a		KN428SP	. . IN . T (MFD by 29372) (LC)	4	
		MS171433	. . PIN (LC	1	
-12		556919-3	. . RETAINER, Bearing coolant control valve (LC)	1	

FIG & INDEX NO	ZONE NO	PART NUMBER	DESCRIPTION 1 2 3 4 5 6 7	UNITS PER ASSY	USABLE ON CODE
14-13		555157	. GUIDE, Bearing coolant control valve (LC)	2	
-14		MS28778-16	. PACKING (LC)	2	
-15		MS29513-024	. PACKING (LC)	2	
-16		MS29513-017	. PACKING (LC)	1	
-17		555149	. POPPET ASSY, Bearing coolant control valve (Bonded) (LC)	2	
-18		555152	. POPPET ASSY, Bearing coolant control valve (Bonded) (LC)	1	
-19		MS29513-015	. PACKING (LC)	2	
-20		MS28774-015	. RING (LC)	4	
-21		555146	. SPRING, Compression, bearing coolant control valve (LC)	2	
-22		555147	. SPRING, Compression, bearing coolant control valve (LC)	1	
-23		555143	. SHIM, Bearing coolant control valve (LC)	4	
-24		555145	. WASHER, Bearing coolant control valve (LC)	1	
-25		556921	. NUT, Bearing coolant control valve (LC)	1	
-26		MS28778-4	. PACKING (LC)	1	
-27		RD273-1027-0900	. ORIFICE RESTRICTOR (Bearing coolant control valve orifice) (Orifice size may be changed during calibration test) (NHA 558075) (LC)	1	
-27		RD273-1027-0790	. ORIFICE RESTRICTOR (Bearing coolant control valve orifice) (Orifice size may be changed during calibration test) (NHA 558075-11) (LC)	1	
-28		MS29513-008	. PACKING (LC)	1	
-29		RD171-1020-0001	. NAMEPLATE	1	
		556917	. BODY ASSY, Bearing coolant control valve (LC)	1	
-29A		KN428SP	. . INSERT (MFD by 29372) (LC)	14	
-29B		KN1032SP	. . INSERT (MFD by 29372) (LC)	14	
-30		556917-3	. . BODY, Bearing coolant control valve (LC)	1	

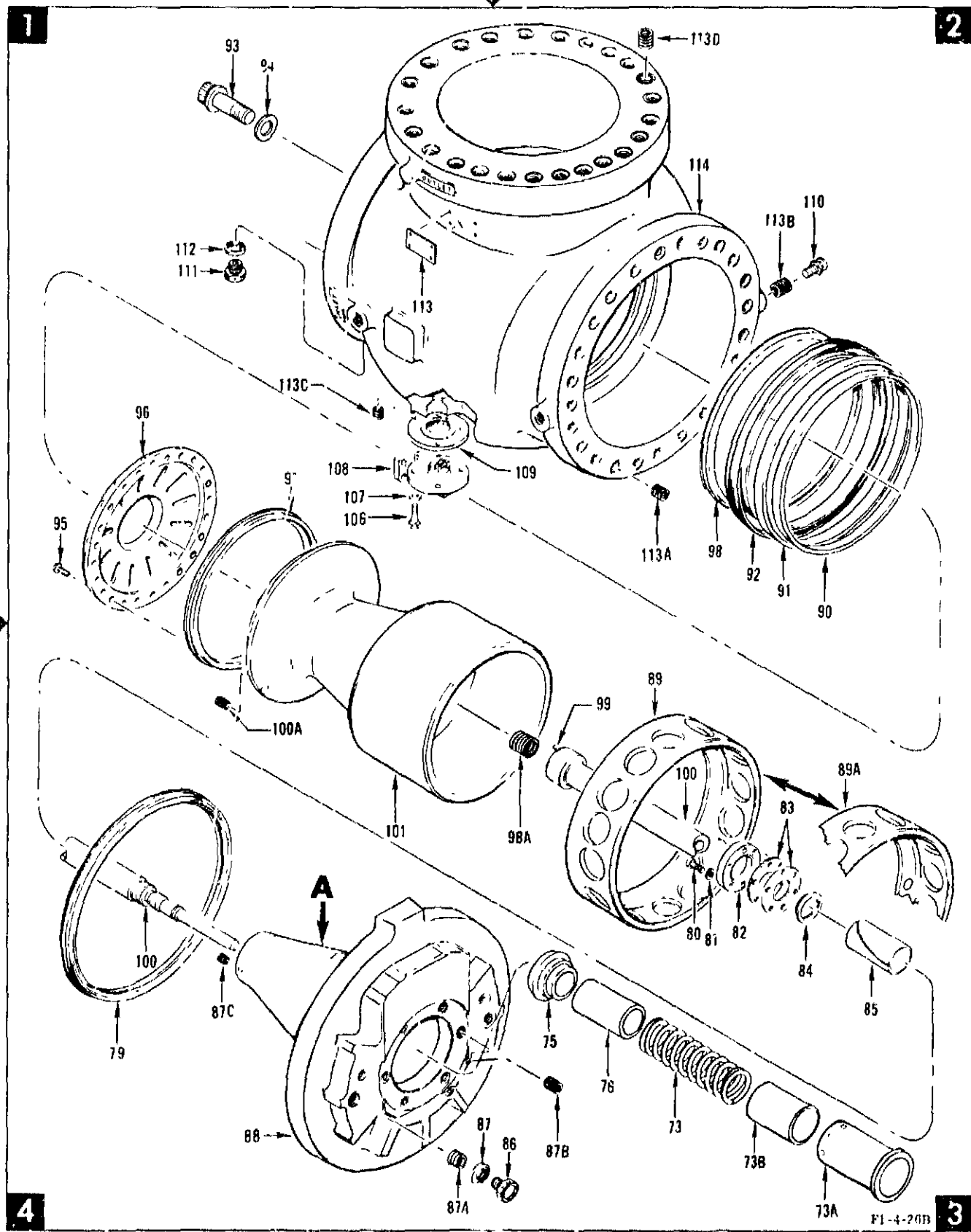

Figure 15. Oxidizer Valve Assembly (Sheet 1 of 3)

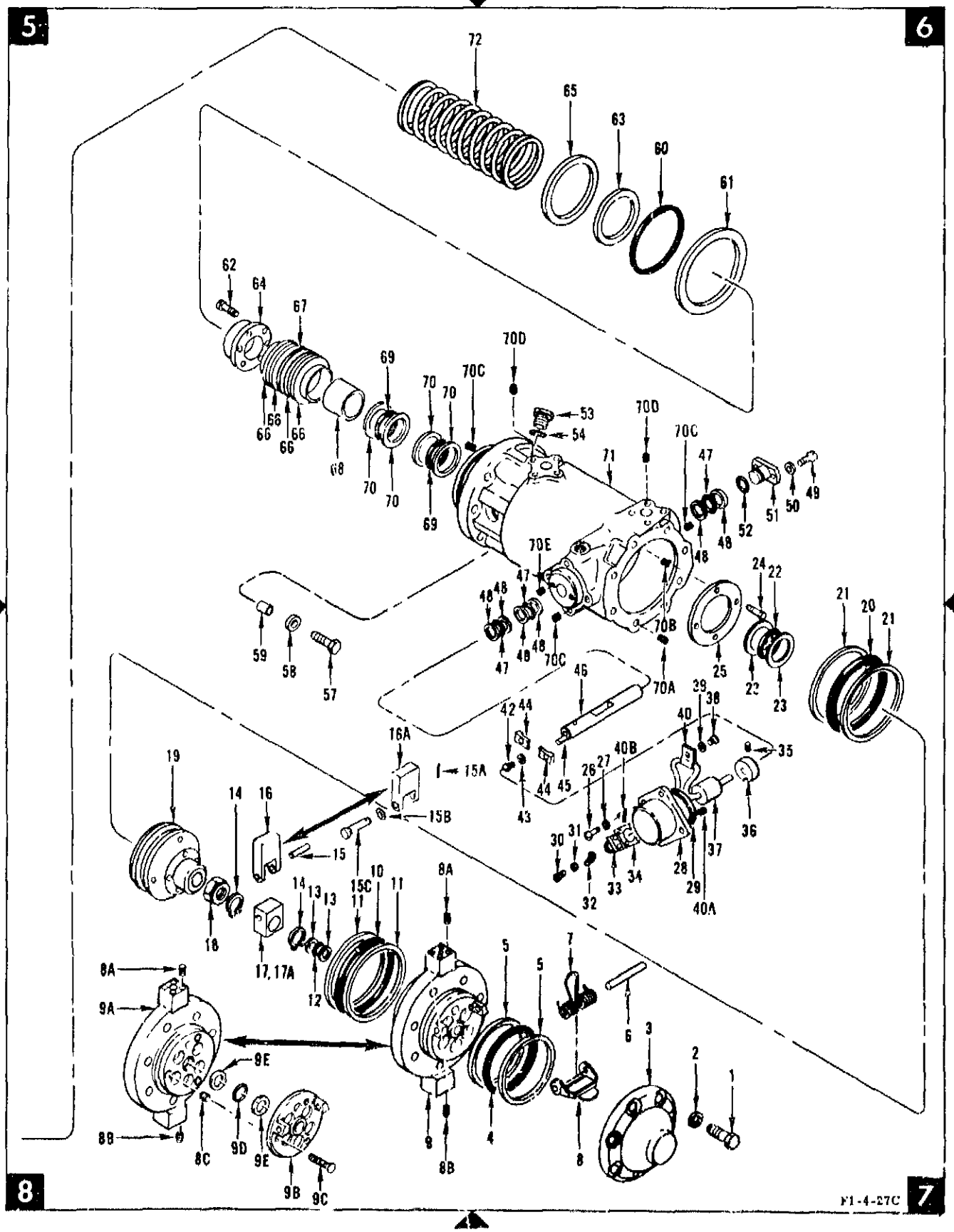

Figure 15. Oxidizer Valve Assembly (Sheet 2 of 3)

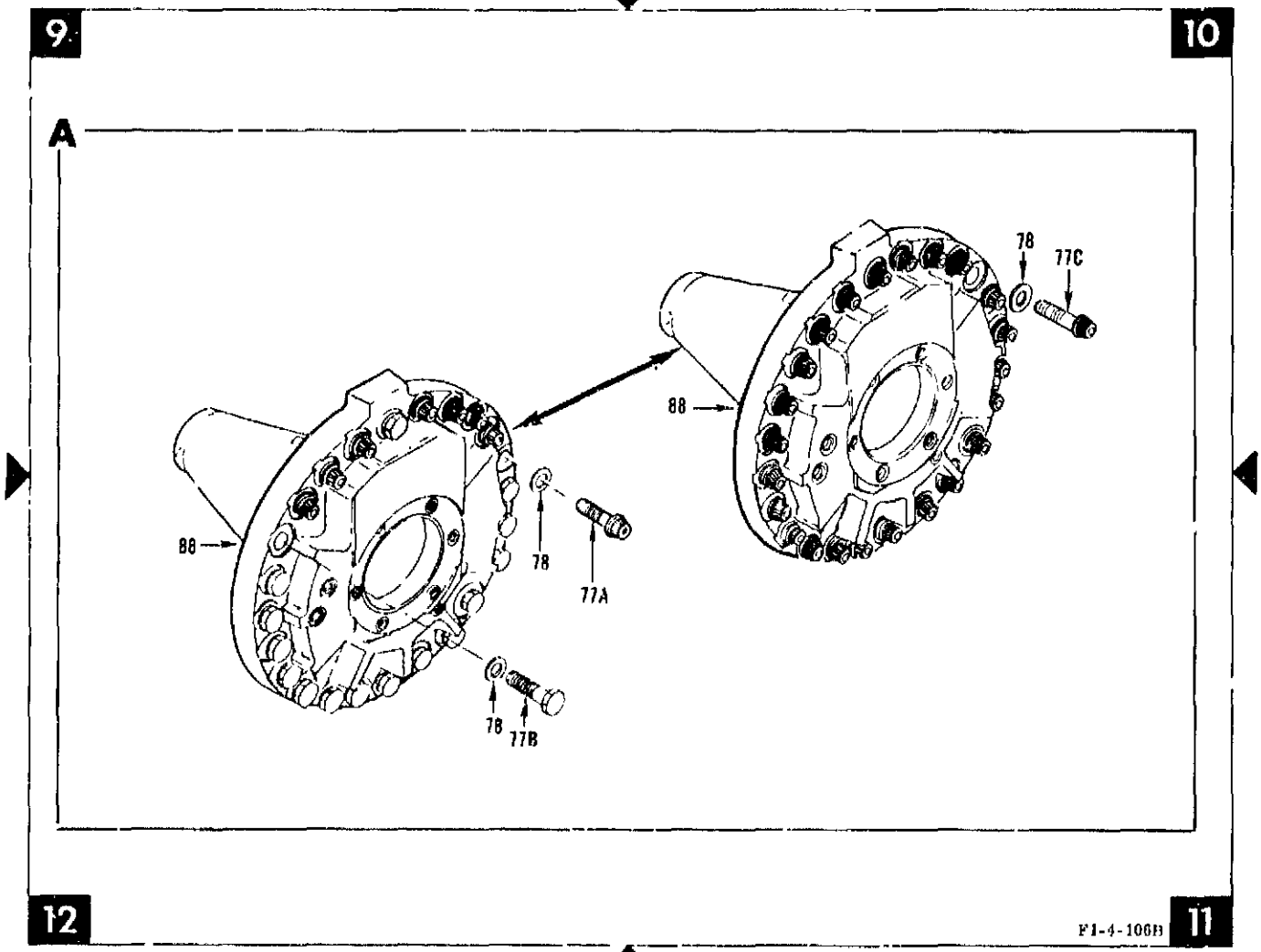

Figure 15. Oxidizer Valve Assembly (Sheet 3 of 3)

FIG & INDEX NO	ZONE NO	PART NUMBER	DESCRIPTION 1 2 3 4 5 6 7	UNITS PER ASSY			USABLE ON CODE
15-		409465-11	VALVE ASSY, Oxidizer (See figure 5, index 126, and figure 6, index 105, . . for RLQMT) (LC)	REF			
		409465-21	VALVE ASSY, Oxidizer (See figure 5, index 126, and figure 6, index 105, . . for REQMT) (LC)		REF		
		409465-31	VALVE ASSY, Oxidizer (See figure 5, index 126, and figure 6, index 105, . . for REQMT) (LC)			REF	
- 1	7	NAS1006-25A	. BOLT	8	8	8	
- 2	7	LD153-0013-0001	. WASHER	8	8	8	
- 3	7	407138	. CAP, Sequence, oxidizer valve (LC)	1	1	1	
- 4	7	MS29513-337	. PACKING (LC)	1	1	1	
- 5	7	MS27782-40	. RETAINER (LC)	2	2	2	
- 6	7	MS20253-4-297	. PIN (LC)	1	1	1	
- 7	7	405305	. SPRING, Sequence (LC)	1	1	1	
- 8	7	405304	. GATE, Sequence, oxidizer valve (LC)	1	1		
- 8	7	405304-3	. GATE, Sequence, oxidizer valve (LC)			1	
		105965	. CYLINDER HEAD ASSY, Oxidizer valve (LC)	1	1		
		405965-11	. CYLINDER HEAD ASSY, Oxidizer valve (LC)			1	
- 8A	8	3501-3CNVX285	. . INSERT (MFD by 91767) (LC)	4	4		
- 8A	8	3501-3CNV0285	. . INSERT (MFD by 91767) (LC)			4	
8B	8	3501-4CNVX375	. . INSERT (MFD by 91767) (LC)	4	4		
- 8B	8	3501-4CNV0375	. . INSERT (MFD by 91767) (LC)			4	
- 8C	8	3501-3CNV0285	. . INSERT (MFD by 91767) (LC)			3	
- 9	8	405965-3	. . BODY, Cylinder head, oxidizer valve (LC)	1	1		
- 9A	8	405965-5	. BODY, Cylinder head, oxidizer valve (LC)			1	
- 9B	8	411027	. PLATE, Seat, oxidizer valve (LC)			1	

FIG & INDEX NO	ZONE NO	PART NUMBER	DESCRIPTION	UNITS PER ASSY			USABLE ON CODE
15- 9C	8	NAS1101C3-7	. SCREW (AP) (LC)			3	
- 9D	8	MS29513-018	. PACKING (LC)			1	
- 9E	8	MS28774-018	. RETAINER (LC)			2	
-10	8	MS29513-343	. PACKING (LC)	1	1	1	
-11	8	MS28782-46	. RETAINER (LC)	2	2	2	
-12	8	MS29513-110	. PACKING (LC)	1	1	1	
-13	8	MS28782-8	. RETAINER (LC)	2	2	2	
-14	8	RS50	. RING (MFD by 80756) (LC)	2	2	2	
-15	8	RD122-3001-0914	. PIN (LC)	1	1		
-15A	7	MS9245-02	. PIN (LC)			1	
-15B	8	RD153-0115-0013	. WASHER (LC)			1	
-15C	6	409464	. PIN, Indicator drive, oxidizer valve (LC)			1	
-16	8	408058	. CLEVIS, Potentiometer drive, oxidizer valve (LC)	1	1		
-16A	8	408058-3	. CLEVIS, Potentiometer drive, oxidizer valve (LC)			1	
-17	8	402925	. BLOCK, Indicator drive, oxidizer valve (LC)	1	1		
-17A	8	402925-3	. BLOCK, Indicator drive, oxidizer valve (LC)			1	
-18	8	MS21083C10	. NUT (MS20364-1018C may be used until supply is exhausted) (LC)	1	1	1	
-19	8	408039	. PISTON, Oxidizer valve (LC)	1	1	1	
-20	7	MS29513-342	. PACKING (LC)	1	1	1	
-21	6,7	MS28782-45	. RETAINER (LC)	2	2	2	
-22	6	MS29513-216	. PACKING (LC)	1	1	1	
-23	7	MS28782-21	. RETAINER (LC)	2	2	2	
-24	6	NAS1102C08-6	. SCREW (LC)	4	4	4	
-25	7	408057	. WASHER, Flow control actuator (LC)	1	1	1	
-26	7	NAS1101C3-12	. SCREW	4	4	4	
-27	7	405309	. WASHER, 3/16 Socket head screw	4	4	4	
28	7	408059	. INDICATOR ASSY, Main oxidizer valve (NO. 1 and NO. 2 oxidizer valve position transducer)	1	1		
		408059-11	. INDICATOR ASSY, Main oxidizer valve (NO. 1 and NO. 2 oxidizer valve position transducer)			1	
-29	7	MS29513 226	. PACKING (LC)	1	1		
-30	7	AN500D4-7	. . SCREW	4	4	4	
-31	7	LD153-0010-0002	. . WASHER	3	3	3	
-32	7	RD191-4002-0001	. . LUG	1	1	1	
-33	7	RD114-1012-0020	. . CONNECTOR, 16S-7P shell size (NO. 1 oxidizer valve position indicator) (J70 designator assigned after installation of oxidizer valve on NO. 1 side)	1	1	1	
-33	7	RD114-1012-0020	. . CONNECTOR, 16S-7P shell size (NO. 2 oxidizer valve position indicator) (J71 designator assigned after installation of oxidizer valve on NO. 2 side)	1	1	1	
-34	7	420-015-16S	. . GASK O-SEAL (MFD by 83259)	1	1	1	
-35	7	NAS1081C06AJN	. . SCREW	1	1		
-35	7	AN565DC6H4	. . SCREW			1	
-36	7	408060	. ARM, Potentiometer, propellant valve	1	1	1	
-37	7	NA5-27336	. . RESISTOR, Variable	1	1	1	
-38	7	NAS1101C06-6	. . SCREW	1	1	1	
-39	7	AN961-6	. . WASHER	1	1	1	
-40	7	772	. . CLAMP (MFD by 83330)	1	1	1	
		406550	. . COVER ASSY, Small, oxidizer valve	1	1	1	
-40A	7	MS21209C0615	. . . INSERT	1	1	1	
-40B	7	MS21209C0415	. . . INSERT	4	4	4	
-41		DELETED					
-42	7	AN500D6-7	. SCREW	2	2		
-42	7	AN500AD6-7	. SCREW			2	
-43	7	LD153-0010-0003	. WASHER	2	2	2	
-44	7	250093	. CLIP, Potentiometer bracket, 3 IN. head suppression valve	2	2	2	
		405298	. SHAFT ASSY, Potentiometer drive, oxidizer valve (LC)	1	1		
		405298-11	. SHAFT ASSY, Potentiometer drive, oxidizer valve (LC)			1	
-45	7	125-0750HDP	. . PIN, Spirol (MFD by 00287) (LC)	1	1	1	
-46	7	405298-3	. . SHAFT, Potentiometer drive, oxidizer valve (LC)	1	1		
-46	7	405298-5	. . SHAFT, Potentiometer drive, oxidizer valve (LC)			1	
-47	6,7	MS29513-018	. PACKING (LC)	3	3	3	
-48	6,7	MS28774-018	. RETAINER (LC)	6	6	6	
-49	6	NAS1101C3-8	. SCREW (LC)	2	2	2	
-50	6	405309	. WASHER, Socket head screws, 3/16 IN. (LC)	2	2	2	
-51	6	405308	. PLUG, Potentiometer shaft, oxidizer valve (LC)	1	1	1	
-52	6	MS29513-111	. PACKING (LC)	1	1	1	
-53	6	AN814-4J	. PLUG AND BLEEDER (Supersedes AN814-4C) (LC)	1	1	1	
-54	6	RE261-3004-0004	. SEAL (Interchangeable with 12100CR4 MFD by C8199) (LC)	1	1	1	
-55		DELETED					
-56		DELETED					
-57	8	RD111-1006-0012	. BOLT (LC)	6	6	6	
-58	8	LD153-0013-0004	. WASHER (LC)	6	6	6	
-59	8	105962	. BUSHING, Cylinder attaching bolt, main oxidizer valve (LC)	1	1	1	
-60	6	MS29513-237	. PACKING (LC)	1	1	1	
-61	6	405960	. WASHER, Cylinder, main oxidizer valve (LC)	AR	AR	AR	
-62	5	NAS1101C3-12	. SCREW (LC)	6	6	6	
-63	6	405241	. WASHER, inner spring, oxidizer valve (LC)	1	1	1	
-64	5	405954	. RETAINER, Piston rod lipseal, oxidizer valve, small (LC)	1	1	1	

FIG & INDEX NO	ZONE NO	PART NUMBER	DESCRIPTION 1 2 3 4 5 6 7	UNITS PER ASSY			USABLE ON CODE
15-65	6	405247	. WASHER, Outer spring, oxidizer valve (LC)	1	1	1	
-66	5	405433	. LIPSEAL, Actuator piston rod, oxidizer valve (LC)	4	4	4	
-67	5	405937	. WASHER, Small piston rod lipseal, oxidizer valve (LC)	1	1	1	
-68	5	405241	. BUSHING (LC)	1	1	1	
-69	5	MS29513-216	. PACKING (LC)	2	2	2	
-70	5	MS28782-21	. RETAINER (LC)	4	4	4	
		408056	. CYLINDER ASSY, Oxidizer valve (LC)	1	1	1	
-70A	7	3591-6CNVX562	. . INSERT (MFD by 91767) (LC)	8	8	8	
-70B	7	3585-2CNVX246	. . INSERT (MFD by 91767) (LC)	4	4	4	
-70C	6,7	3591-3CNVX285	. . INSERT (MFD by 91767) (LC)	12	12	12	
-70D	6	3591-4CNVX375	. . INSERT (MFD by 91767) (LC)	8	8	8	
-70E	6	3585-06CNVX207	. . INSERT (MFD by 91767) (LC)	2	2	2	
		156101	. . PIN (MFD by 92555) (LC)	2	2	2	
-71	6	408056-3	. . CYLINDER, Oxidizer valve (LC)	1	1		
-72	5	402910	. SPRING, Outer, oxidizer valve (LC)	1	1	1	
-73	3	402909	. SPRING, Inner, oxidizer valve (LC)	1	1	1	
-73A	3	409459	. SLEEVE, Spring, main oxidizer valve (LC)			1	
-73B	3	409468	. LINER, Sleeve, main oxidizer valve (LC)			1	
-74		DELETED					
-75	3	405246	. SEAT, Spring, oxidizer valve (LC)	1	1	1	
-76	3	407156	. BUSHING, Spring, oxidizer valve (LC)	1	1	1	
-77		DELETED					
-77A	10	RD111-4012-0918	. BOLT		8		
-77B	10	NAS1009-16H	. BOLT		16		
-77C	10	RD111-4012-0918	. BOLT	24		24	
-78	10, 12	LD153-0013-0007	. WASHER	24	24	24	
-79	4	RD261-3010-0157	. SEAL (LC)	1	1	1	
-80	3	NAS1101C3-12	. SCREW (LC)	6	6	6	
-81	3	405309	. WASHER, Socket head screw, 3 16 IN (LC)	6	6	6	
-82	3	408034	. RETAINER, Large piston rod, lipseal, oxidizer valve (LC)	1	1	1	
-83	3	405432	. LIPSEAL, Cover, piston rod, oxidizer valve (LC)	2	2	2	
-84	3	407151	RING, Backup, cover seal, piston rod, oxidizer valve (LC)	1	1	1	
-85	3	405240	. BUSHING, Piston rod, oxidizer valve, large (LC)	1	1	1	
-86	3	AN814-4J	. PLUG AND BLEEDER (Supersedes AN814-4C) (LC)	1	1	1	
-87	4	RE261-3004-0004	. SEAL (Interchangeable with 12100CR4 MFD by 08199) (LC)	1	1	1	
		408052	. COVER ASSY, Main oxidizer valve (LC)	1	1	1	
-87A	4	3591-4CNVX375	. . INSERT (MFD by 91767) (LC)	2	2	2	
-87B	3	3591-6CNVX562	. . INSERT (MFD by 91767) (LC)	6	6	6	
-87C	4	3591-3CNVX285	. . INSERT (MFD by 91767) (LC)	6	6	6	
-88	10, 12	408052-3	. . COVER, Oxidizer valve (LC)	1	1	1	
-89	3	405311	. RETAINER, Skirt seal, oxidizer valve (LC)	1	1		
-89A	3	405311-3	RETAINER, Skirt seal, oxidizer valve (LC)			1	
-90	2	405227	. RING, Compressor, skirt seal, oxidizer valve (LC)	1	1	1	
-91	2	408626	. RING, Expander, skirt seal, oxidizer valve (LC)	1	1	1	
-92	2	406214	. SEAL, Poppet skirt, oxidizer valve (LC)	1	1	1	
-93	1	RD111-4001-1211	. BOLT (LC)	1	1	1	
-94	1	LD153-0013-0009	. WASHER (LC)	1	1	1	
-95	1	NAS1101C3-8	. SCREW (LC)	24	24	24	
-96	1	407154	. RETAINER, Poppet nose seal, oxidizer valve (LC)	1	1	1	
-97	1	407903	. SEAL, Poppet nose, oxidizer valve (LC)	1	1	1	
-98	2	408061	. RING, Bearing, poppet skirt, oxidizer valve (LC)	1	1	1	
		405667	. PISTON ROD ASY, Oxidizer valve (LC)	1	1	1	
-98A	3	3591-12CNVX1125	. . INSERT (MFD by 91767) (LC)	1	1	1	
-99	2	RD192-3001-X08	. PIN (LC)	2	2	2	
-100	3, 4	405667-3	. ROD, Piston, oxidizer valve (LC)	1	1	1	
		408021	. POPPET ASSY, Oxidizer valve (LC)	1	1	1	
-100A	4	KNHL1032	. . INSERT (MFD by 29372) (LC)	24	24	24	
-101	4	408021-3	. . BODY, Poppet (LC)	1	1	1	
-102							
THRU							
-105		DELETED					
-106	1	RD111-1009-6516	. BOLT	4	4	4	
-107	1	LD153-0013-0003	. WASHER	4	4	4	
-108	1	554119	. VALVE ASSY, Check oxidizer dome purge (See figure 16 for breakdown) (LC)	1	1	1	
-109	2	464657-59	. SEAL, Pressure-actuated (LC)	1	1	1	
-110	2	RD111-9001-0016	. BOLT	4	4	4	
-111	1	AN814-2J	. PLUG AND BLEEDER (Supersedes AN814-2C) (LC)	1	1	1	
-112	1	RE261-3004-0002	. SEAL (Interchangeable with 12100CR2 MFD by 08199) (LC)	1	1	1	
-113	1	R5-1S	. NAMEPLATE	1	1	1	
		MS21318-18	. SCREW (AN535-2-3 may be used until supply is exhausted) (AP)	4	4	4	
		RD170-2028-0001	. PLATE		1	1	
		409466	. HOUSING ASSY, Oxidizer valve (LC)	1	1	1	
-113A	2	1191-9CNVX844	. . INSERT (MFD by 91767) (LC)	24	24	24	
-113B	2	KNHL624	. . KEENSERT (MFD by 29372)	4	4	4	
-113C	1	3591-5CNVX468	. . INSERT (MFD by 91767) (LC)	4	4	4	
-113D	2	KNH1018T20SP	. . KEENSERT (MFD by 29372) (LC)	48	48	48	
-114	2	409466-3	. . BODY, Housing oxidizer valve (LC)	1	1	1	

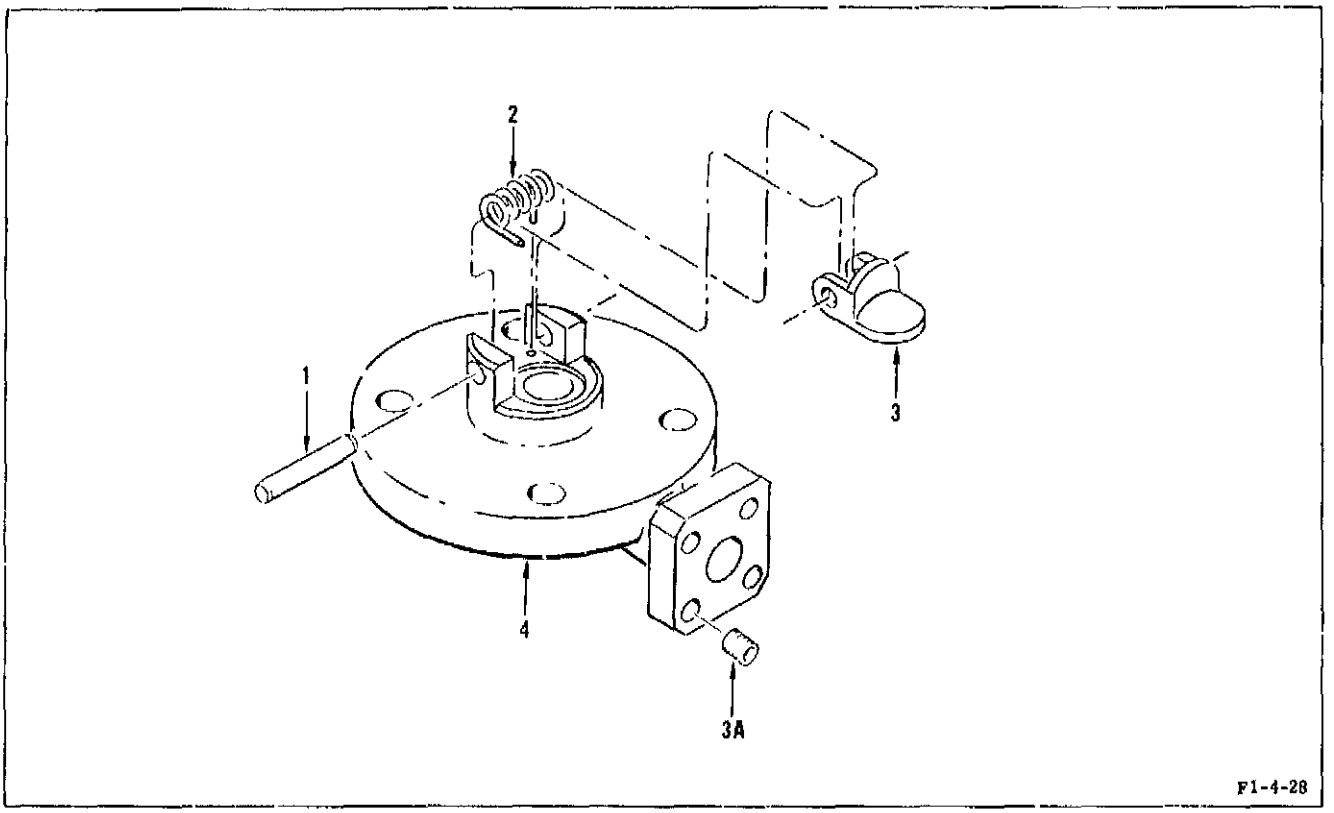

Figure 16. Oxidizer Dome Purge Check Valve Assembly

FIG & INDEX NO	ZONE NO	PART NUMBER	1 2 3 4 5 6 7 DESCRIPTION	UNITS PER ASSY	USABLE ON CODE
16-		551119	VALVE ASSY, Check, oxidizer dome purge (See figure 15, index 108 for REQMT)(LC)	REF	
- 1		551118	. PIN, Oxidizer purge, check valve (LC)	1	
- 2		551120	. SPRING, Torsion, swing check valve, 1 2 IN (LC)	1	
- 3		551114	. GATE, Oxidizer purge, check valve (LC)	1	
		551102	. BODY ASSY, Swing check purge, valve (LC)	1	
- 3A		MS124096	. . INSERT (LC)	1	
- 1		551102-3	BODY, Swing check purge, valve (LC)	1	

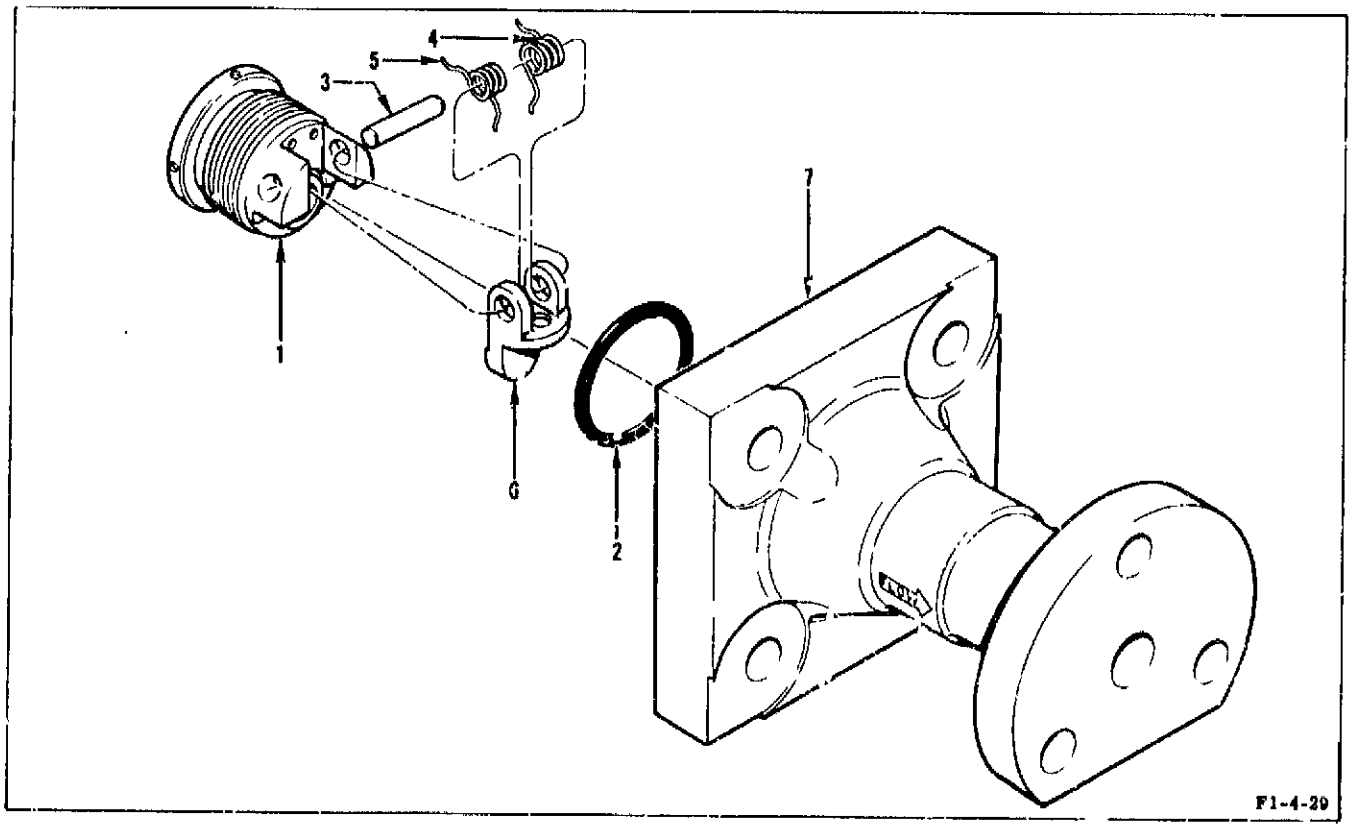

Figure 17. Purge Check Valve Assembly

FIG & INDEX No.	ZONE NO	PART NUMBER	DESCRIPTION 1 2 3 4 5 6 7	UNITS PER ASSY	USABLE ON CODE
17-		308915	VALVE ASSY, Check, purge (Gas generator oxidizer purge check valve) . . . . . (See figure 27, index 95, for REQMT) (LC)	REF	
- 1		308747	. GATE SEAT, Swing check valve, purge (LC)	1	
- 2		308746	. SEAL, Swing check valve, purge (LC)	1	
- 3		308745	. PIN, Swing check valve, purge (LC)	1	
- 4		308744-2	. SPRING, Torsion, swing check valve, purge (LC)	1	
- 5		308744-1	. SPRING, Torsion, swing check valve, purge (LC)	1	
- 6		308914	. GATE, Swing check valve, purge (LC)	1	
- 7		308749	. BODY, Swing check valve purge (LC)	1	

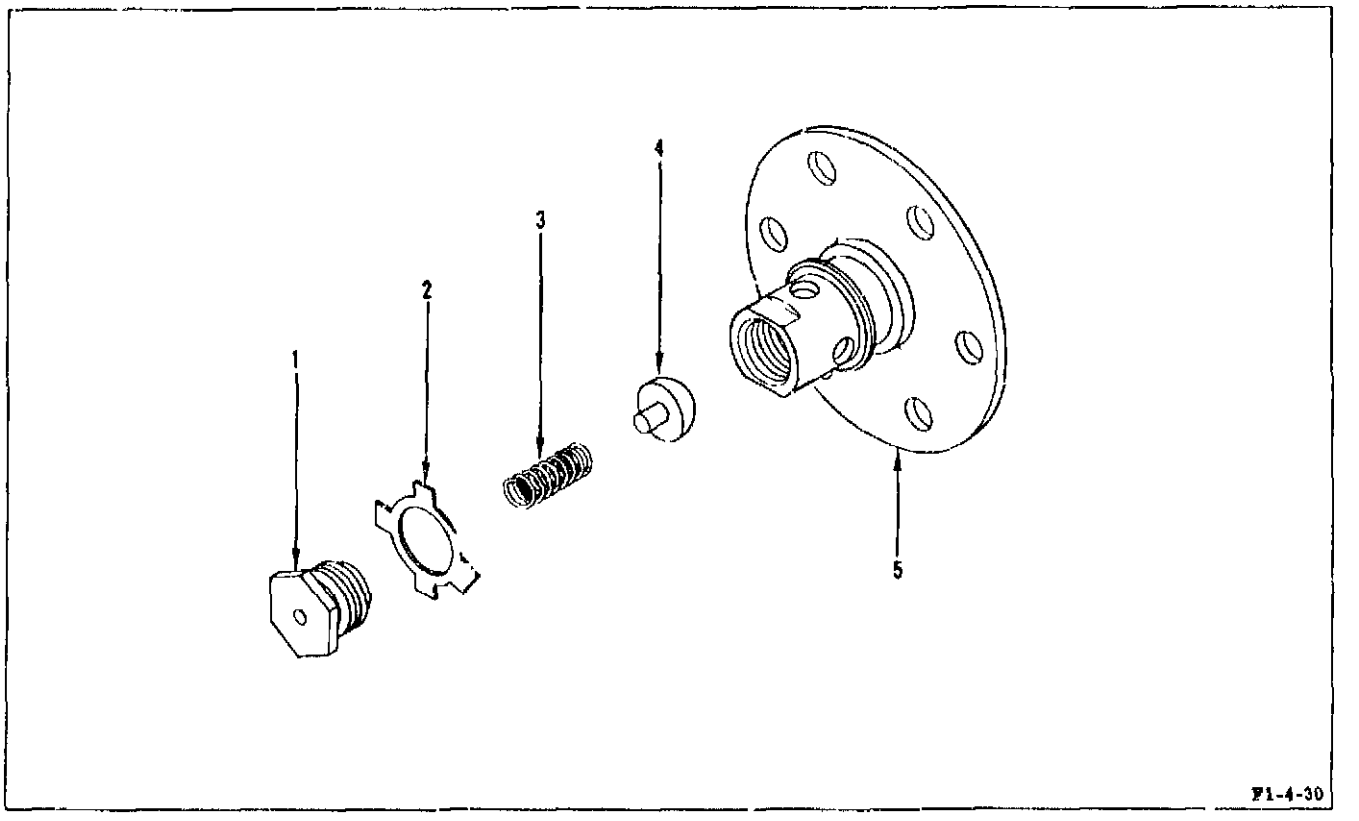

Figure 18. Inert Prefill Check Valve Assembly (Prefill Check Valve)

FIG & INDEX NO	ZONE NO	PART NUMBER	DESCRIPTION 1 2 3 4 5 6 7	UNITS PER ASSY	USABLE ON CODE
1B-		407825	VALVE ASSY, Check, inert prefill (Prefill check valve) (See figure 5, index 118, for REQMT) (LC)	REF	
- 1		407829	. CAP, Inert prefill check valve (LC)	1	
- 2		407830	. WASHER, Tab lock, inert prefill, check valve (LC)	1	
- 3		407828	. SPRING, Compression, inert prefill, check valve (LC)	1	
- 4		407827	. BALL, Inert prefill, check valve (LC)	1	
- 5		407826	. BODY, Inert prefill, check valve (LC)	1	

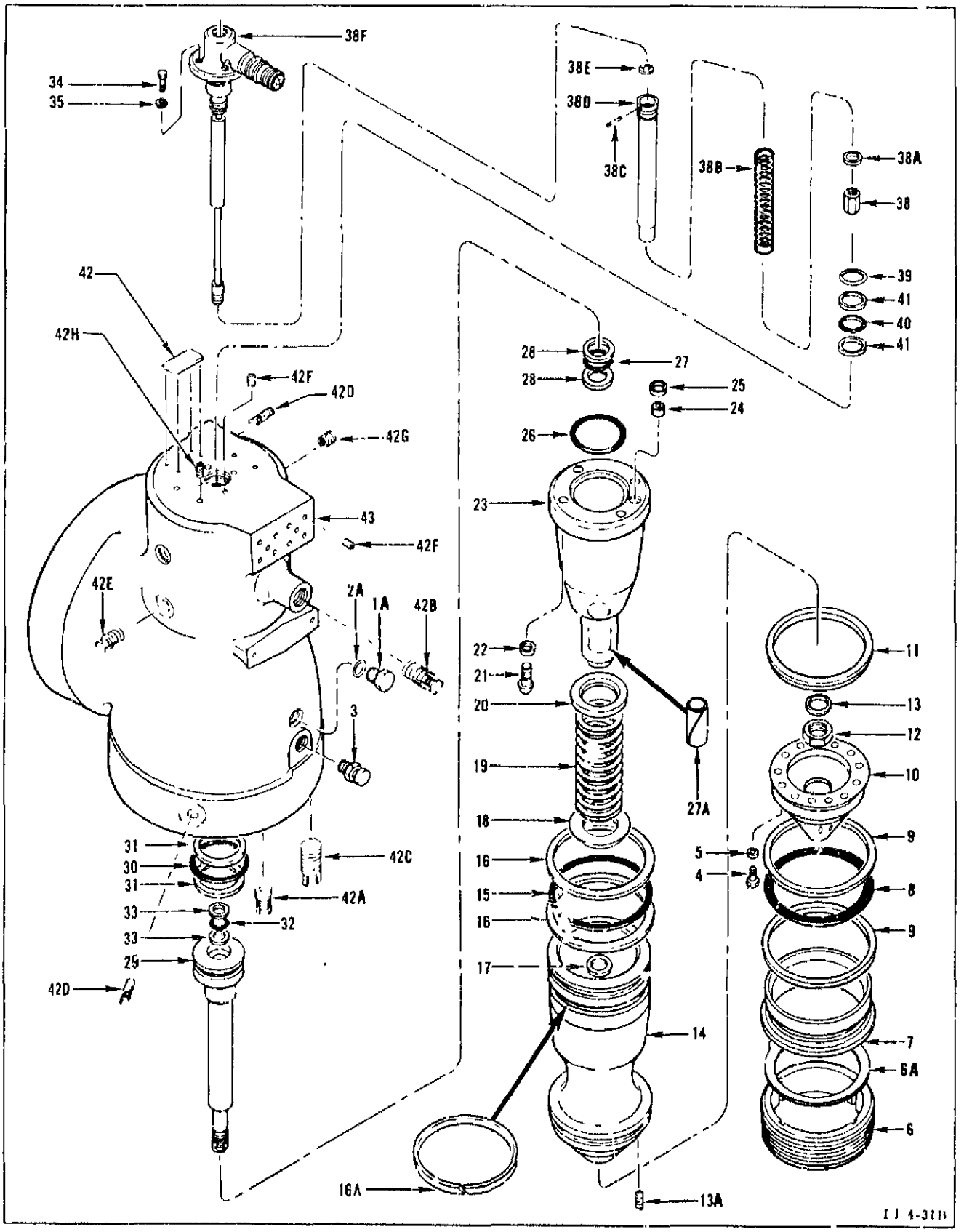

Figure 19. Fuel Valve Assembly

FIG & INDEX NO	ZONE NO	PART NUMBER	DESCRIPTION 1 2 3 4 5 6 7	UNITS PER ASSY	USABLE ON CODE
19-		410910-11	VALVE ASSY, Fuel (See figure 5, index 124, and figure 6, index 108 for REQMT) (LC)	REF	
- 1		DELETED			
- 1A		AN814-6J	. PLUG AND BLEEDER (Supersedes AN814-6C) (LC)	1	
- 2		DELETED			
- 2A		RD262-3001-0006	. GASKET (LC)	1	
- 3		RD111-9001-0016	. BOLT	8	
- 4		NAS1101C4-10	. SCREW (LC)	12	
- 5		404936	. WASHER, Retainer, main fuel valve (LC)	12	
- 6		410906	. RETAINER, Main fuel valve (LC)	1	
- 6A		410911	. WASHER, Key-retainer, main fuel valve (LC)	1	
- 7		410908	. SEAT, Main fuel valve (LC)	1	
- 8		RD262-4006-0253	. O-RING (LC)	1	
- 9		21682-31	. RETAINER (MFD by 73680) (LC)	2	
-10		405694	. RETAINER, Seal, main fuel valve (LC)	1	
-11		404150	. SEAL, Main fuel valve (LC)	1	
-12		NAS1022C12	. NUT (LC)	1	
-13		LD153-0010-0024	. WASHER (LC)	1	
		408043	. POPPET ASSY, Main fuel valve (LC)	1	
-13A		KNL428SP	. . KEENSERT (MFD by 29372) (LC)	12	
-14		408043-3	. . POPPET, Main fuel valve (LC)	1	
-15		RD262-4006-0129	. O-RING (LC)	1	
-16		MS28782-56	. RETAINER (LC)	2	
-16A		408046	. RING, Main fuel valve (LC)	1	
-17		405428	. WASHER, Piston, main fuel valve (LC)	1	
-18		405418	. WASHER, Lower, main spring, main fuel valve (LC)	1	
-19		404721	. SPRING, Piston, main fuel valve (LC)	1	
-20		405416	. WASHER, Upper, main spring, main fuel valve (LC)	1	
-21		RD111-3001-0600	. BOLT (LC)	4	
-22		LD153-0013-0004	. WASHER (LC)	4	
-23		408044	. GUIDE, Poppet, main fuel valve (LC)	1	
-24		402887	. GUIDE, O-ring, main fuel valve (LC)	1	
-25		RD262-4006-0016	. O-RING (LC)	1	
-26		RD262-4006-0334	. O-RING (LC)	1	
-27		RD262-4006-0215	. O-RING (LC)	1	
-27A		408045	. BUSHING, Main fuel valve (LC)	1	
-28		MS28782-20	. RETAINER (LC)	2	
-29		408064	. PISTON, Main fuel valve (LC)	1	
-30		MS29513-331	. PACKING (LC)	1	
-31		MS28782-34	. RETAINER (LC)	2	
-32		MS29513-115	. PACKING (LC)	1	
-33		MS28782-13	. RETAINER (LC)	2	
-34		NAS1101C4-12	. SCREW	4	
-35		401936	. WASHER, Retainer, main fuel valve	4	
		408063-11	. INDICATOR ASSY, Main fuel valve (NO. 1 fuel valve position indicator)	1	
		408063-11	. INDICATOR ASSY, Main fuel valve (NO. 2 fuel valve position indicator)	1	
-36		DELETED			
-37		DELETED			
-38		405982	. . NUT ASSY, Position indicator, main fuel valve (LC)	1	
-38A		405426	. . WASHER, Potentiometer, main fuel valve (LC)	1	
-38B		405427-3	. . SPRING, Indicator, main fuel valve (LC)	1	
-38C		MS171437	. . PIN (LC)	1	
-38D		405424	. . HOUSING, Potentiometer, main fuel valve (LC)	1	
-38E		3502-18-15	. . WASHER (MFD by 78189) (LC)	1	
-38F		NA5-27409	. . RESISTOR ASSY, Linear motion, 2K ohms, with integral single pole double throw switch (Soldered) (LC)	1	
-38F		406693	. . COVER, Potentiometer, main fuel valve (Welded) (LC)	1	
-38F		NA5-27286T15	. . RECEPTACLE ASSY, Electrical, multipin, multiple types (Welded) (NO. 1 fuel valve position indicator) (Designator assigned after installation of fuel valve on NO. 1 side) (J76) (LC)	1	
-38F		NA5-27286T19	. . RECEPTACLE ASSY, Electrical, multipin, multiple types (Welded) (NO. 2 fuel valve position indicator) (Designator assigned after installation of fuel valve on NO. 2 side) (J77) (LC)	1	
-39		RD262-4006-0210	. O-RING (LC)	1	
-40		MS29513-018	. PACKING (LC)	1	
-41		MS28774-018	. RETAINER (LC)	2	
-42		RD171-1020-0001	. NAMEPLATE	1	
		410909	. HOUSING ASSY, Main fuel valve (LC)	1	
-42A		KNHL624SP	. . KEENSERT (MFD by 29372) (LC)	4	
-42B		KNHL624	. . KEENSERT (MFD by 29372)	2	
-42C		KNH1018T20SP	. . KEENSERT (MFD by 29372) (LC)	40	
-42D		KNL428SP	. . KEENSERT (MFD by 29372)	4	
-42E		KNL428TSP	. . KEENSERT (MFD by 29372)	6	
-42F		3591-4CNVX375	. . INSERT (MFD by 91767) (LC)	12	
-42G		3591-6CNVX562	. . INSERT (MFD by 91767) (LC)	6	
-42H		1191-3CNVX285	. . INSERT (MFD by 91767) (LC)	4	
-43		410909-3	. . HOUSING, Main fuel valve (LC)	1	

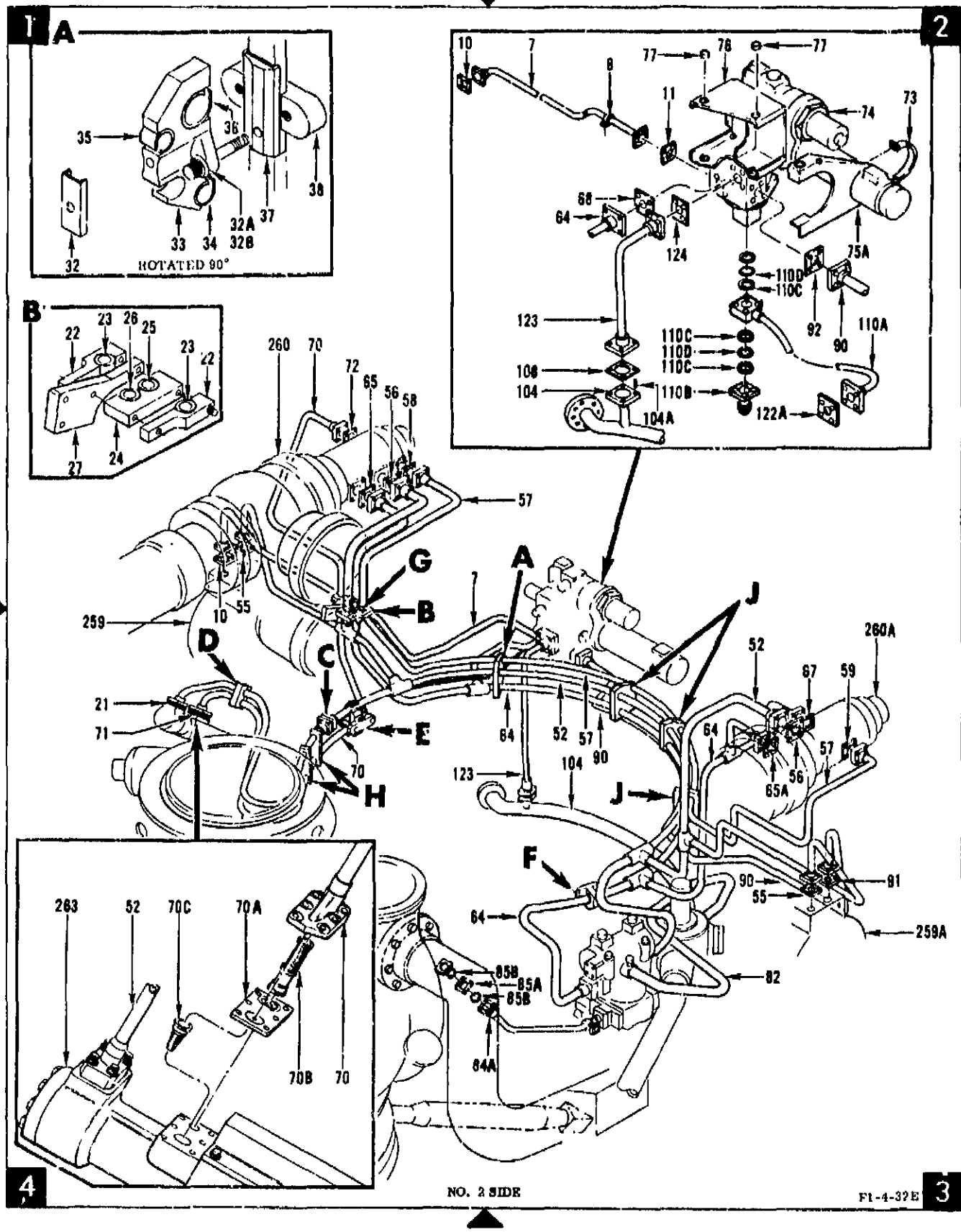

Figure 20. Hydraulic Control System (Sheet 1 of 6)

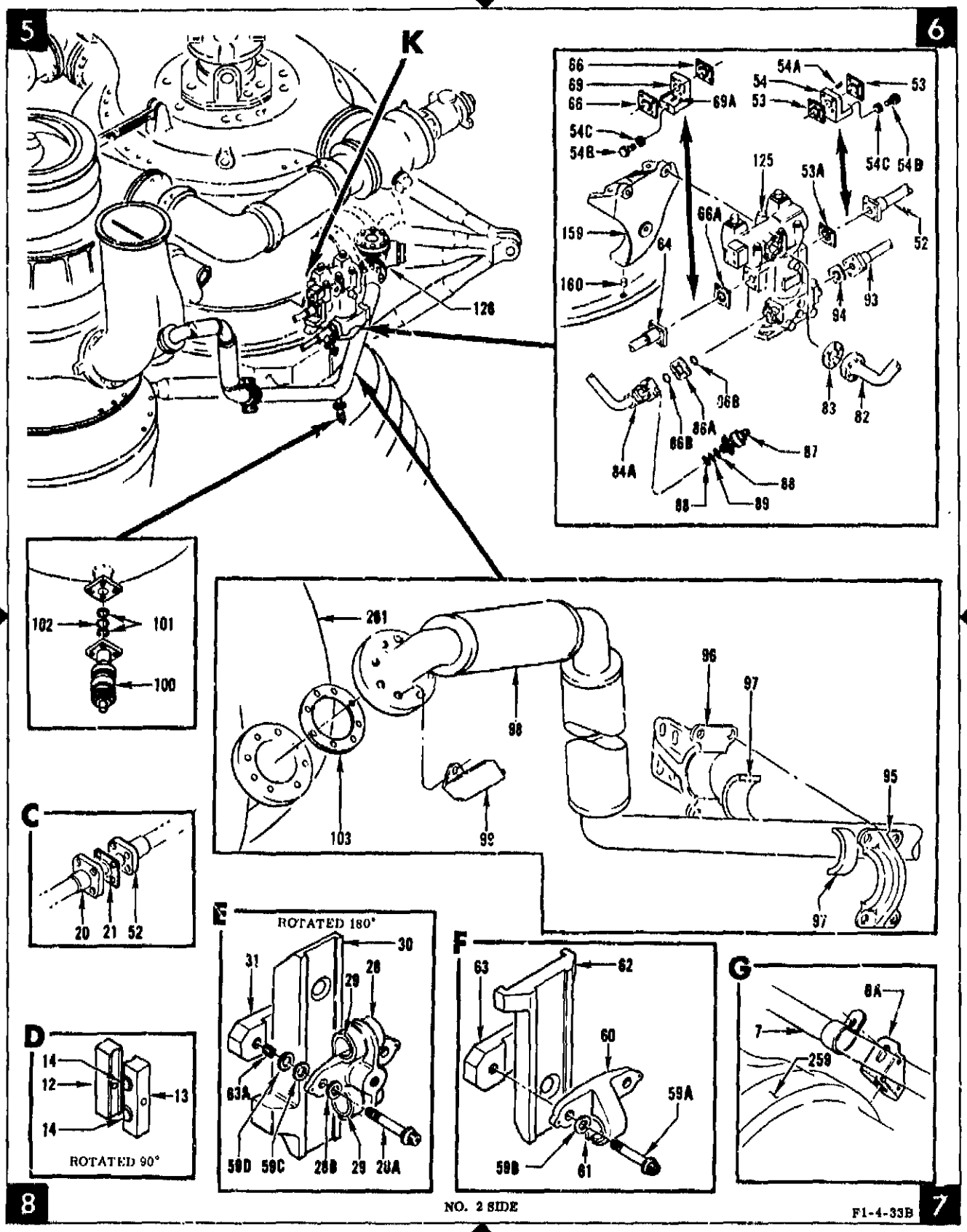

Figure 20. Hydraulic Control System (Sheet 2 of 6)

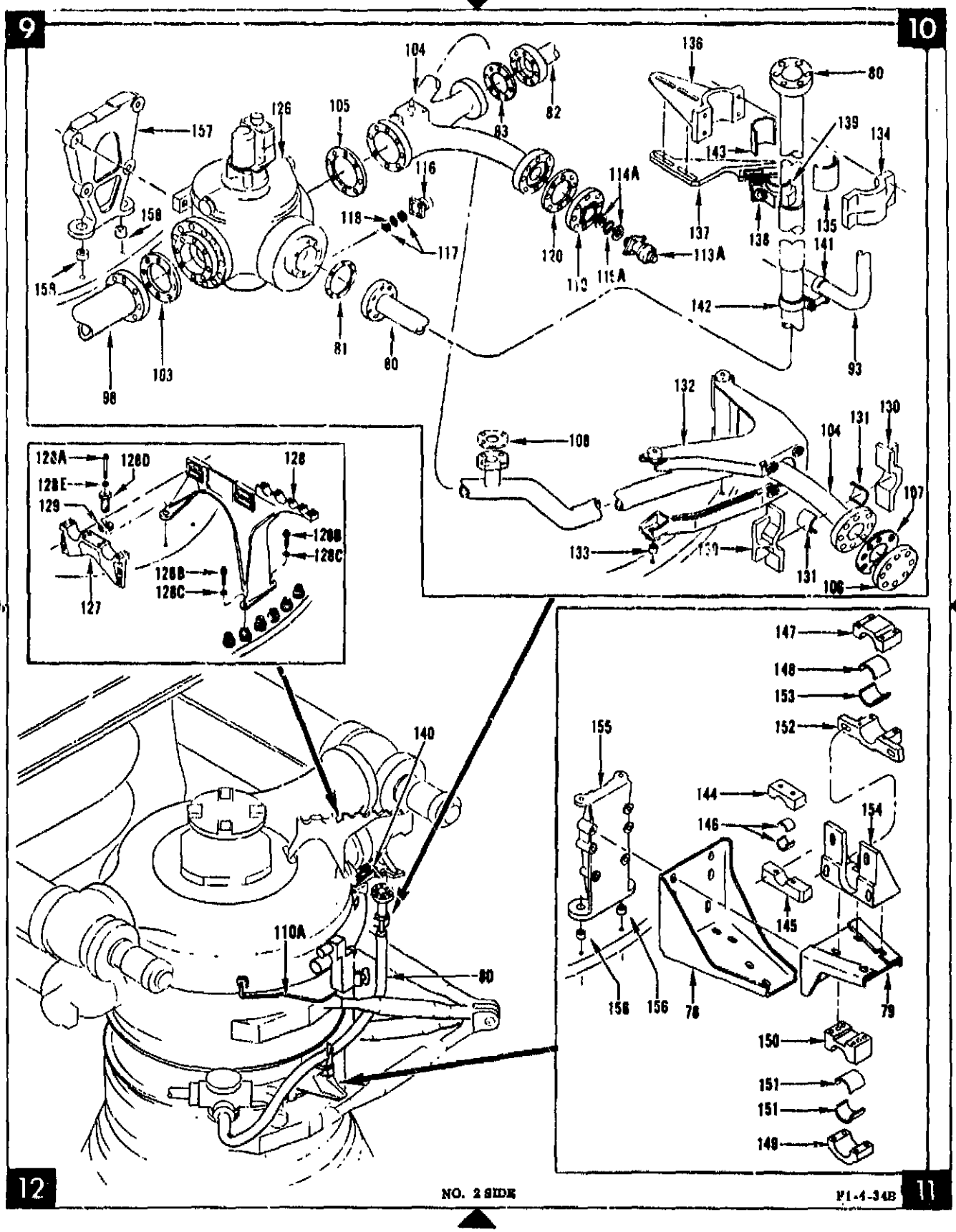

Figure 20. Hydraulic Control System (Sheet 3 of 6)

13 14

H

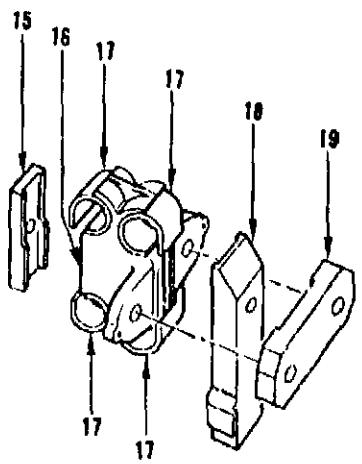

TYPICAL

J

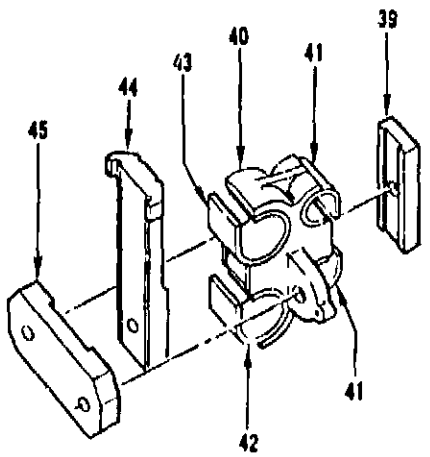

TYPICAL

K

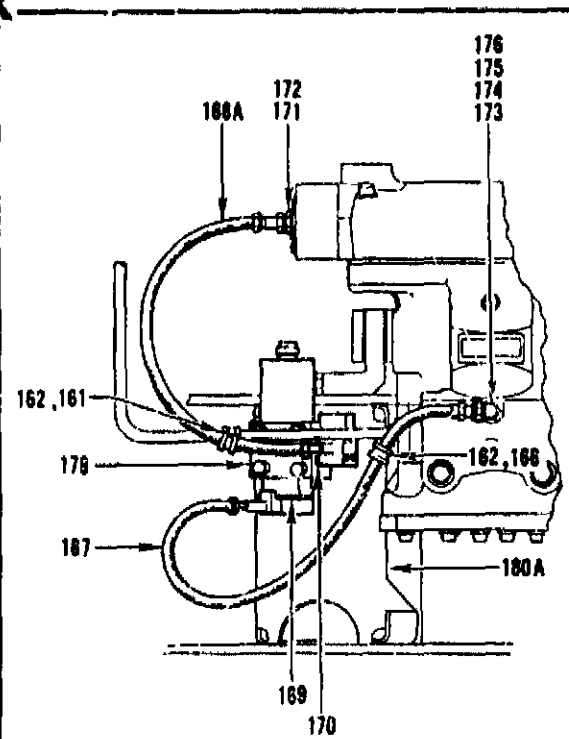

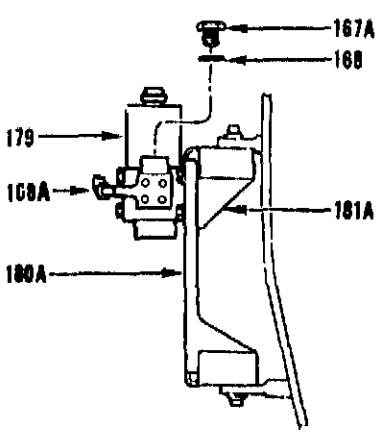

ROTATED 73°

16 NO. 2 SIDE F1-4-35B 15

Figure 20. Hydraulic Control System (Sheet 4 of 6)

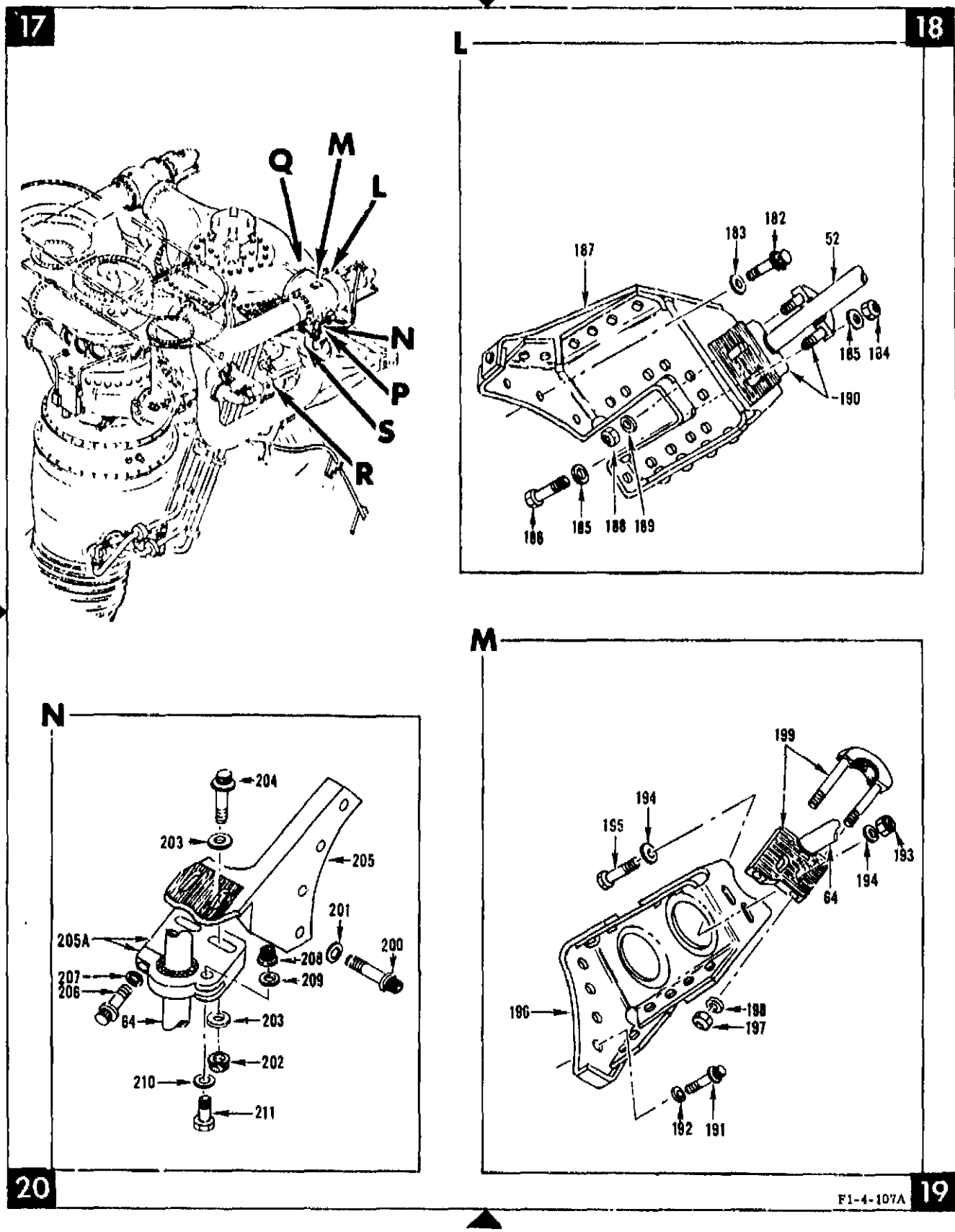

Figure 20. Hydraulic Control System (Sheet 5 of 6)

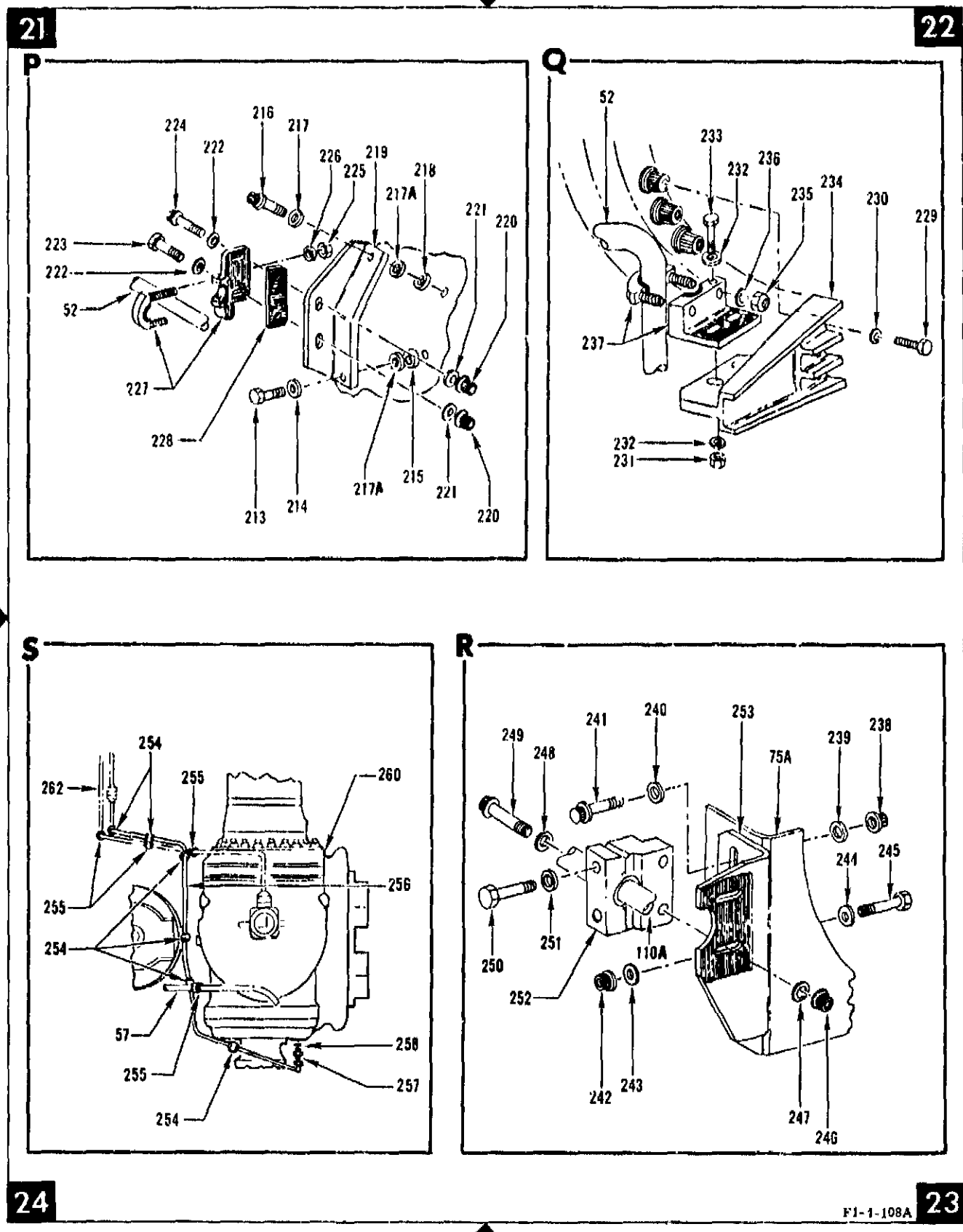

Figure 20. Hydraulic Control System (Sheet 6 of 6)

FIG & INDEX NO	ZONE NO	PART NUMBER	1 2 3 4 5 6 7 DESCRIPTION	UNITS PER ASSY		USABLE ON CODE
20-		601601	HYDRAULIC CONTROL SYSTEM INSTL (See figure 1, index 3, for REQMT)			
			(Hydraulic control system INSTL, engine F-2029 THRU F-2042)	REF		
			(Hydraulic control system INSTL, engine F-2043 THRU F-2098)		REF	
		RE127-2001-0006	. CLAMP	4	4	
		AN520C10R28	. SCREW (AP)	1	1	
		AN520C10R26	. SCREW (AP)	1	1	
		LD153-0010-0007	. WASHER (AP)	1	1	
		NAS43DD3-60	. SPACER (AP)	1	1	
		NAS43DD3-72	. SPACER (AP)	1	1	
		NAS679C3W	. NUT (AP)	1	1	
		RE127-2001-0006	. CLAMP	3	3	
		RE127-2001-0010	. CLAMP	1	1	
		AN520C10R8	. SCREW (AP)	1	1	
		AN520C10R26	. SCREW (AP)	1	1	
		LD153-0010-0007	. WASHER (AP)	1	1	
		NAS43DD3-72	. SPACER (AP)	1	1	
		NAS679C3W	. NUT (AP)	1	1	
		RE127-2001-0006	. CLAMP	3	3	
		AN520C10R8	. SCREW (AP)	1	1	
		LD153-0010-0007	. WASHER (AP)	1	1	
		NAS679C3W	. NUT (AP)	1	1	
- 1 THRU - 6		DELETED				
- 6A	7	602069	. BRACKET ASSY, Support, clamp	1	1	
		RD111-4010-3409	. BOLT (AP)	1	1	
		RD153-5003-0004	. WASHER (AP)	1	1	
		MS9103-36	. BRACKET	1	1	
- 7	1,2,7	602066	. TUBE ASSY, NO. 1, main fuel valve, open (NO. 1 fuel valve open control tube) (Welded) (LC)	1	1	AHN
- 7	1,2,7	602066-21	. TUBE ASSY, NO. 1, main fuel valve, open (NO. 1 fuel valve open control tube) (Welded) (LC)		1	EVA
		RD111-4010-6418	. BOLT (Intfc-NO. 1 MFV) (AP)	4	4	
		RD111-4010-6419	. BOLT (Intfc-hypergol manifold)	4	4	
		RD153-5002-0004	. WASHER (Intfc-NO. 1 MFV and hypergol manifold) (AP)	8	8	
		RD172-0006-0001	. . TAPE (HYDRAULIC)	AR	AR	
		RD172-0014-0033	. . TAPE (FUEL)	AR	AR	
		RD172-0014-0039	. . TAPE (FLOW)	AR	AR	
		RD172-0018-2250	. . TAPE (2250 PSI)	AR	AR	
- 8	2	RE127-2001-0008	. CLAMP	1	1	
- 9	2	RE127-2001-0006	. CLAMP	1	1	
		AN520C10R8	. SCREW (AP)	1	1	
		LD153-0010-0007	. WASHER (AP)	1	1	
		NAS679C3W	. NUT (AP)	1	1	
-10	1	RD251-4083-XXXX	. ORIFICE PLATE (NO. 1 fuel valve open control orifice) (Orifice size determined by calibration tests) (LC)	1	1	
-11	2	19-406332-9	. SEAL ASSY, Plate (LC)	1	1	
-12	8	601901	. CLAMP, Support, tube	1	1	
-13	8	601898	. CLAMP, Support, tube	1	1	
-14	8	RE127-2002-0006	. CLAMP	2	2	
		RD111-4009-0424	. BOLT (AP)	1	1	
		RD153-5002-0004	. WASHER (AP)	1	1	
		RD153-1002-0004	. WASHER (AP)	1	1	
		RD114-8003-1004	. NUT (AP)	1	1	
-15	13	601893	. CLAMP, Tube support	2	2	
		RD111-4010-0413	. BOLT (AP)	1	1	
		RD153-5002-0004	. WASHER (AP)	1	1	
-16	13	601735	. SPACER, Tube support, hydraulic control and purge lines	2	2	
		RD111-4010-0426	. BOLT (AP)	2	2	
		RD153-5002-0004	. WASHER (AP)	2	2	
-17	13	RE127-2002-0006	. CLAMP	4	4	
-18	13	601732	. SUPPORT, Tube, dual hydraulic control lines	1	1	
		NAS1102C3-12	. SCREW (AP)	1	1	
-19	13	601734	. NUTPLATE ASSY, Tube support, hydraulic control lines	1	1	
		KNL4285P	. . INSERT (MFD by 29372)	2	2	
-20	8	602057	. LINE ASSY, System close to gas generator close (Welded) (Gas generator ball valve close line) (LC)	1	1	
		RD111-4010-6420	. BOLT (Intfc-gas generator ball valve) (AP)	4	4	
		RD111-4011-6427	. BOLT (Intfc-propellant valves close tube) (AP)	4	4	
		RD153-5002-0004	. WASHER (Intfc-gas generator ball valve and propellant valves close tube) (AP)	8	8	
		RD153-1002-1004	. WASHER (Intfc-propellant valves close tube) (AP)	4	4	
		RD114-8003-1004	. NUT (Intfc-propellant valves close tube) (AP)	4	4	
		RD172-0006-0001	. . TAPE (HYDRAULIC)	AR	AR	
		RD172-0014-0033	. . TAPE (FUEL)	AR	AR	
		RD172-0014-0039	. . TAPE (FLOW)	AR	AR	
		RD172-0018-2250	. . TAPE (2250 PSI)	AR	AR	
-21	4,8	19-406332-9	. SEAL ASSY, Plate (LC)	2	2	
-22	1	601883	. BLOCK, Support, outboard hydraulic control line	2	2	

FIG & INDEX NO	ZONE NO	PART NUMBER	1 2 3 4 5 6 7 DESCRIPTION	UNITS PER ASSY		USABLE ON CODE
20-23	1	RE127-2002-0006	. CLAMP	2	2	
-24	1	601884	. BLOCK, Support, outboard hydraulic control line	1	1	
-25	1	RE127-2002-0010	. CLAMP	1	1	
-26	1	RE127-2002-0008	. CLAMP	1	1	
		RD111-4010-0414	. BOLT (AP)	1	1	
		RD111-4010-0422	. BOLT (AP)	2	2	
		RD111-4010-0430	. BOLT (AP)	1	1	
		RD153-5002-0004	. WASHER (AP)	4	4	
		MS9102-40	. BRACKET	1	1	
		MS9102-51	. BRACKET	1	1	
-27	1	601882	. BRACKET, Support, outboard	1	1	
		RD111-4008-0506	. BOLT (AP)	2	2	
		RD153-5002-0005	. WASHER (AP)	2	2	
-28	8	601731	. CLAMP, Tube support, dual hydraulic control lines	1	1	
-28A	8	RD111-4010-6426	. BOLT	2	2	
-28B	8	RD153-5002-0004	. WASHER	2	2	
-29	8	RE127-2002-0006	. CLAMP	2	2	
-30	8	601732	. SUPPORT, Tube, dual hydraulic control lines	1	1	
		NAS1102C3-12	. SCREW (AP)	1	1	
-31	8	601734	. NUTPLATE ASSY, Tube support, hydraulic control lines	1	1	
		KNL428SP	. . INSERT (MFD by 29372)	2	2	
-32	1	601896	. CLAMP, Support, tube bundle	1	1	
		RD111-4008-3406	. BOLT (AP)	1	1	
		RD153-5002-0004	. WASHER (AP)	1	1	
-32A	1	RD111-4010-6430	. BOLT	2	2	
-32B	1	RD153-5002-0004	. WASHER	2	2	
-33	1	601730	. SPACER, Tube bundle, hydraulic control lines	1	1	
-34	1	RE127-2002-0006	. CLAMP	1	1	
-35	1	RE127-2002-0010	. CLAMP	1	1	
-36	1	RE127-2002-0014	. CLAMP	1	1	
-37	1	601895	. SUPPORT, Tube bundle, hydraulic control lines	1	1	
		NAS1102C3-10	. SCREW (AP)	1	1	
-38	1	601734	. NUTPLATE ASSY, Tube support, hydraulic control lines	1	1	
		KNL428SP	. . INSERT (MFD by 29372)	2	2	
-39	14	601896	. CLAMP, Support, tube bundle	3	3	
		RD111-4008-3406	. BOLT (AP)	1	1	
		RD153-5002-0004	. WASHER (AP)	1	1	
-40	14	601730	. SPACER, Tube bundle, hydraulic control lines	3	3	
		RD111-4010-6430	. BOLT (AP)	2	2	
		RD153-5002-0004	. WASHER (AP)	2	2	
-41	14	RE127-2002-0006	. CLAMP	6	6	
-42	14	RE127-2002-0010	. CLAMP	3	3	
-43	14	RE127-2001-0014	. CLAMP	3	3	
-44	14	601895	. SUPPORT, Tube bundle	3	3	
		NAS1102C3-10	. SCREW (AP)	1	1	
-45	14	601734	. NUTPLATE ASSY, Tube support, hydraulic control lines	3	3	
		KNL428SP	. . INSERT (MFD by 29372)	6	6	
-46 THRU -51		DELETED				
-52	3,4,6,8, 18,21,22	602089	. TUBE ASSY, System close (Propellant valves close tube) (Welded) (LC)	1	1	
		RD111-4010-0418	. BOLT (Intfc-engine control valve) (AP)	4	4	
		RD111-4011-6427	. BOLT (Intfc-system to GG line) (AP)	4	4	
		RD111-4010-6418	. BOLT (Intfc-NO. 1 and NO. 2 MFL and MLV) (AP)	16	16	
		RD153-1002-0004	. WASHER (Intfc-system to GG line) (AP)	4	4	
		RD153-5002-0004	. WASHER (AP)	24	24	
		RD114-8003-1004	. NUT (Intfc-system to GG line) (AP)	4	4	
		602090	. . TEE ASSY, Hydraulic (LC)	1	1	
		AN814-4JL	. . PLUG AND BLEEDER (Supersedes AN814-4CL) (LC)	1	1	
		RD262-3001-0004	. . GASKET (LC)	1	1	
		RD172-0006-0001	. . TAPE (HYDRAULIC)	AR	AR	
		RD172-0014-0033	. . TAPE (RP-1)	AR	AR	
		RD172-0014-0039	. . TAPE (FLOW)	AR	AR	
		RD172-0018-2250	. . TAPE (2250 PSI)	AR	AR	
-53	6	19-406332-19	. SEAL ASSY, Plate (LC)	2		
-53A	6	19-406332-19	. SEAL ASSY, Plate (LC)		1	
-54	6	601926-11	. ADAPTER ASSY, Control lines, 4-way valve (LC)	1		
-54A	6	KN428SP	. . INSERT (MFD by 29372) (LC)	4		
-54B	6	AN814-4JL	. PLUG AND BLEEDER (Supersedes AN814-4CL) (LC)	2		
-54C	6	RD262-3001-0004	. GASKET (LC)	2		
-55	3,4	19-406332-9	. SEAL ASSY, Plate (LC)	2	2	
-56	1,3	19-406332-15	. SEAL ASSY, Plate (LC)	2	2	
-57	2,3,24	602055	. LINE ASSY, Sequence valve to sequence valve (Welded) (LC)	1	1	
		RD111-1009-6316	. BOLT (Intfc-NO. 1 oxidizer valve) (AP)	4	4	
		RD111-4010-6418	. BOLT (Intfc-NO. 2 oxidizer valve) (AP)	4	4	
		LD153-0013-0001	. WASHER (Intfc-NO. 1 oxidizer valve) (AP)	4	4	
		RD153-5002-0004	. WASHER (Intfc-NO. 2 oxidizer valve) (AP)	4	4	

FIG & INDEX NO	ZONE NO	PART NUMBER	DESCRIPTION 1 2 3 4 5 6 7	UNITS PER ASSY		USABLE ON CODE
20-		RD172-0006-0001	. . TAPE (HYDRAULIC)	AR	AR	
		RD172-0014-0033	. . TAPE (RP-1)	AR	AR	
		RD172-0014-0039	. . TAPE (FLOW)	AR	AR	
		RD172-0018-2250	. . TAPE (2250 PSI)	AR	AR	
-58	1	19-406332-7	. SEAL ASSY, Plate (LC)	1	1	
-59	3	19-406332-25	. SEAL ASSY, Plate (LC)	1	1	
-59A	7	RD111-4010-6423	. BOLT	2	2	
-59B	7	RD153-5002-0004	. WASHER	2	2	
-59C	8	LD153-0010-0009	. WASHER	AR	AR	
-59D	8	LD153-0010-0010	. WASHER	AR	AR	
-60	7	601894	. CLAMP, Tube support, single hydraulic control line	1	1	
-61	7	RE127-2004-0014	. CLAMP	1	1	
-62	7	601733	. SUPPORT, Tube, single hydraulic control line	1	1	
		NAS1102C3-8	. SCREW (AP)	1	1	
-63	7	601734	. NUTPLATE ASSY, Tube support, hydraulic control lines	1	1	
-63A	8	KN1428SP	. . INSERT (MFD by 29372)	2	2	
-64	2, 3, 4, 6, 19, 20	602073	. TUBE ASSY, System open (Propellant valves open tube) (Welded) (LC)	1		
-64	2, 3, 4, 6, 19, 20	602088	. TUBE ASSY, System open (Propellant valves open tube) (Welded) (LC)		1	
		RD111-4010-6418	. BOLT (Intfc-NO. 1 and NO. 2 oxidizer valve opening line port (AP)	8	8	
		RD111-4009-6316	. BOLT (Intfc-NO. 2 oxidizer valve) (AP)	4	4	
		RD111-4010-6419	. BOLT (Intfc-hypergol manifold) (AP)	4	4	
		RD111-4010-6418	. BOLT (Intfc-engine control valve) (AP)	4	4	
		RD153-5002-0004	. WASHER (Intfc-NO. 1 and NO. 2 oxidizer valve opening line port, hypergol manifold and engine control valve) (AP)	16	16	
		LD153-0013-0001	. WASHER (Intfc-NO. 2 oxidizer valve) (AP)	4	4	
		602090	. . TEE ASSY, Hydraulic (NHA 602088) (LC)		1	
		AN814 4JL	. . PLUG AND BLEEDER (Supersedes AN814-4CL) (NHA 602088) (LC)		1	
		RD262-3001-0004	. . GASKET (NHA 602088) (LC)		1	
		RD172-0006-0001	. . TAPE (HYDRAULIC)	AR	AR	
		RD172-0014-0033	. . TAPE (RP-1) (NHA 602073)	AR	AR	
		RD172-0014-0039	. . TAPE (FLOW)	AR	AR	
		RD172-0018-2250	. . TAPE (2250 PSI)	AR	AR	
		AN814-4JL	. PLUG AND BLEEDER (Supersedes AN814-4CL) (LC)	1	1	
		RD262-3001-0004	. GASKET (LC)	1	1	
-65	1	RD251-4085-XXXX	. ORIFICE PLATE (NO. 1 oxidizer valve open control orifice) (Orifice size determined by calibration tests) (LC)	1	1	
-65A	3	RD251-4085-XXXX	. ORIFICE PLATE (NO. 2 oxidizer valve open control orifice) (Orifice size determined by calibration tests) (LC)	1	1	
-66	6	19-406332-19	. SEAL ASSY, Plate (LC)	2		
-66A	6	19-406332-19	. SEAL ASSY, Plate (LC)		1	
-67	3	19-406332-7	. SEAL ASSY, Plate (LC)	1	1	
-68	2	19-406332-15	. SEAL ASSY, Plate (LC)	1	1	
-69	6	601026	. ADAPTER ASSY, Control lines, 4-way valve (LC)	1		
-69A	6	KN428SP	. . INSERT (MFL by 29372) (LC)	4		
-70	1, 4	602102	. TUBE ASSY, Sequence valve to gas generator, open (Gas generator ball valve open tube) (Welded) (LC)	1	1	
		RD111-4010-6416	. BOLT (Intfc-NO. 1 oxidizer valve) (AP)	4	4	
		RD111-4010-6420	. BOLT (Intfc-gas generator ball valve) (AP)	6		
		RD111-4010-6415	. BOLT (Intfc-gas generator ball valve) (AP)		6	
		RD153-5002-0004	. WASHER (AP)	10	10	
		RD172-0006-0001	. . TAPE (HYDRAULIC)	AR	AR	
		RD172-0014-0033	. . TAPE (RP-1)	AR	AR	
		RD172-0014-0039	. . TAPE (FLOW)	AR	AR	
		RD172-0018-2250	. . TAPE (2250 PSI)	AR	AR	
-70A	4	RD251-4142-XXXX	. ORIFICE PLATE (Orifice size determined by calibration tests) (Used on engines incorporating MD173 change) (LC)	1	1	
-70B	4	NA5-260274	. FILTER ASSY, Orifice, gas generator actuator (Used on engines incorporating MD173 change) (LC)	1	1	
-70C	4	NA5-260275	. FILTER ASSY, Orifice, gas generator actuator (Used on engines incorporating MD173 change) (LC)	1	1	
-71	4	RD251-4098-XXXX	. ORIFICE PLATE (Gas generator ball valve open control orifice) (Orifice size determined by calibration tests) (LC)	1	1	
-72	1	19-406332-25	. SEAL ASSY, Plate (LC)	1	1	
-73	2	601877	. CLAMP ASSY, Hypergol container	1	1	
		RD111-4011-6416	. BOLT (AP)	2	2	
		RD153-5002-0004	. WASHER (AP)	2	2	
		RD153-1002-0004	. WASHER (AP)	2	2	
		RD114-8003-1004	. NUT (AP)	2	2	
-74	2	407791	. MANIFOLD ASSY, Hypergol (See figure 22 for breakdown) (J56) (LC)	1	1	
		RD111-4010-6511	. BOLT (AP)	3	3	
		RD153-5002-0005	. WASHER (AP)	3	3	
-75		DELETED				
-75A	2, 23	601483-11	. BRACKET ASSY, Hypergol container (Welded)	1	1	
		RD111-4009-0528	. BOLT (Upper flange) (AP)	1	1	
		RD111-4011-6519	. BOLT (Lower flange) (AP)	1	1	
		RD111-4011-6522	. BOLT (Lower flange) (AP)		1	
		RD153-5002-0005	. WASHER (AP)	1	1	

FIG & INDEX NO	ZONE NO	PART NUMBER	1 2 3 4 5 6 7 DESCRIPTION	UNITS PER ASSY		USABLE ON CODE
20-		RD153-1002-0005	. WASHER (AP)	1	1	
		RD114-8003-1005	. NUT (AP)	1	1	
-76	2	601465	. BRACKET ASSY, Mount, hypergol manifold (Welded)	1	1	
		RD111-4009-0528	. BOLT (Upper flange) (AP)	2	2	
		RD111-4011-6519	. BOLT (Lower flange) (AP)	2	2	
		RD153-5002-0005	. WASHER (AP)	4	4	
		RD153-1002-0005	. WASHER (AP)	4	4	
		AN316C10R	. NUT (Upper flange) (AP)	2	2	
		RD114-8003-1005	. NUT (AP)	4	4	
-77	2	601488	. BUSHING, Hypergol manifold bracket	3	3	
-78	11	601935	. BRACKET, Support, gimbal system, yaw actuator supply line	1	1	
		RD111-4011-6429	. BOLT (AP)	6	6	
		RD153-5002-0004	. WASHER (AP)	2	2	
		RD153-1002-0004	. WASHER (AP)	2	2	
		MS15795-310	. WASHER (AP)	2	2	
		RD114-8005-1004	NUT (AP)	2	2	
-79	11	601445	. BRACKET, Support, gimbal system return lines	1	1	
		RD111-4011-6416	. BOLT (AP)	4	4	
		RD153-5002-0004	. WASHER (AP)	4	4	
		RD153-1002-0004	. WASHER (AP)	4	4	
		MS15795-310	. WASHER (AP)	4	4	
		RD114-8005-1004	. NUT (AP)	4	4	
-80	9, 10, 11	NA5-28756	. HOSE ASSY, Hydraulic return checkout valve to customer connect (Checkout valve ground return hose) (LC)	1	1	GU
-80	9, 10, 11	NA5-200158	. HOSE ASSY, Hydraulic return checkout valve to hydraulic supply wrap-around duct (Checkout valve ground return hose) (LC)		1	BKA
		RD111-4010-6418	. BOLT (AP)	8	8	
		RD153-5002-0004	. WASHER (AP)	8	8	
		RD172-0014-0033	. . TAPE (RP-1)	AR	AR	
		RD172-0014-0039	. . TAPE (FLOW)	AR	AR	
		RD172-0006-0001	. . TAPE (HYDRAULIC)	AR	AR	
		RD172-0018-1000	. . TAPE (1000 PSI)	AR	AR	
-81	9	19-406330-5	. SEAL ASSY, Plate (LC)	1	1	
-82	3, 6, 10	601881	. LINE ASSY, System return (Welded) (LC)	1	1	
-82	3, 6, 10	601881-21	. LINE ASSY, System return (Welded) (LC)		1	EVA
		RD111-4011-6426	. BOLT (Intfc-actuator return line) (AP)	6	6	
		RD111-4010-6418	. BOLT (Intfc-engine control valve) (AP)	6	6	
		RD153-1002-0004	. WASHER (Intfc-actuator return line) (AP)	6	6	
		RD153-5002-0004	. WASHER (Intfc-engine control valve) (AP)	12	12	
		RD114-8005-1004	. NUT (Intfc-actuator return line) (AP)	6	6	
		RD172-0006-0001	. . TAPE (HYDRAULIC)	AR	AR	
		RD172-0014-0033	. . TAPE (RP-1)	AR	AR	
		RD172-0014-0039	. . TAPE (FLOW)	AR	AR	
		RD172-0018-2250	. . TAPE (2250 PSI)	AR	AR	
		AN814-4JL	. . PLUG AND BLEEDER (Supersedes AN814-4CL) (NHA 601881) (LC)	1	1	
		RD262-3001-0004	. . GASKET (NHA 601881) (LC)	1	1	
-83	6, 10	19-406335-1	. SEAL ASSY, Plate (LC)	2	2	
-84		DELETED				
-84A	4, 6	602064	. TUBE ASSY, Engine supply (Welded) (Engine control valve supply tube) (LC)	1	1	
		RD111-4008-6418	. BOLT (Intfc-NO. 2 high pressure duct) (AP)	4	4	
		RD111-4008-3418	. BOLT (Intfc-engine control valve) (AP)	4	4	
		RD153-5002-0004	. WASHER (AP)	8	8	
		RD172-0006-0001	. . TAPE (HYDRAULIC)	AR	AR	
		RD172-0003-0001	. . TAPE (LUBRICATION)	AR	AR	
		RD172-0014-0039	. . TAPE (FLOW)	AR	AR	
		RD172-0018-2250	. . TAPE (2250 PSI)	AR	AR	
-85		DELETED				
-85A	3	409256	. SPACER, Eccentric, engine supply tube and igniter fuel tube (LC)	1	1	
-85B	3	RD262-4006-0025	. RING (LC)	2	2	
-86		DELETED				
-86A	6	602071	. SPACER, Engine supply line (LC)	1	1	
-86B	6	RD262-4006-0024	. RING (LC)	2	2	
-87	6	NA5-260079T2	. COUPLING ASSY, High temperature, flight half (Engine control valve supply tube drain quick-disconnect) (LC)	1	1	
		RD111-4010-6414	. BOLT (AP)	4	4	
		RD153-5002-0004	. WASHER (AP)	4	4	
-88	6	MS28774-018	. RETAINER (LC)	2	2	
-89	6	RD262-4006-0018	. O-RING (LC)	1	1	
		RE127-2001-0006	. CLAMP	2	2	
		NAS1003-2A	. BOLT (AP)	1	1	
		LD153-0013-0001	. WASHER (AP)	2	2	
		NAS679C3W	. NUT (AP)	1	1	
		MS9104-55	. BRACKET	2	2	
		NAS1006-1A	. BOLT (AP)	1	1	
		LD153-0013-0004	. WASHER (AP)	1	1	
-90	2, 3	602065	. TUBE ASSY, NO. 2, main fuel valve open (Welded) (NO. 2 fuel valve open control tube) (LC)	1	1	
		RD111-4010-6419	. BOLT (Intfc-hypergol manifold) (AP)	4	4	
		RD111-4010-6418	. BOLT (Intfc-NO. 2 fuel valve open port) (AP)	4	4	

FIG & INDEX NO	ZONE NO	PART NUMBER	1 2 3 4 5 6 7 DESCRIPTION	UNITS PER ASSY		USABLE ON CODE
20-		RD153-5002-0004	. WASHER (AP)	8	8	
		RD172-0006-0001	. . TAPE (HYDRAULIC)	AR	AR	
		RD172-0014-0033	. . TAPE (RP-1)	AR	AR	
		RD172-0014-0039	. . TAPE (FLOW)	AR	AR	
		RD172-0018-2250	. . TAPE (2250 PSI)	AR	AR	
- 91	3	RD251-4063-XXXX	. ORIFICE PLATE (NO. 2 fuel valve open control orifice) (Orifice size determined by calibration tests) (LC)	1	1	
- 92	2	19-406332-9	. SEAL ASSY, Plate (LC)	1	1	
- 93	6,10	602087	. HOSE ASSY, Ground supply, hydraulic (Engine control valve ground hydraulic supply hose) (Welded) (LC)	1	1	
		RD111-4010-0417	. BOLT (AP)	4	4	
		RD153-5002-0004	. WASHER (AP)	4	4	
		RD172-0006-0001	. . TAPE (HYDRAULIC)	AR	AR	
		RD172-0014-0033	. . TAPE (RP-1)	AR	AR	
		RD172-0014-0039	. . TAPE (FLOW)	AR	AR	
		RD172-0018-3000	. . TAPE (3000 PSI)	AR	AR	
- 94	6	19-406332-17	. SEAL ASSY, Plate (LC)	1	1	
- 95	7	601932	. CAP, Support, hydraulic return hose	1	1	
		RD111-4011-6423	. BOLT (AP)	4	4	
		RD153-5002-0004	. WASHER (AP)	4	4	
		RD153-1002-0004	. WASHER (AP)	4	4	
		RD114-8005-1004	. NUT (AP)	4	4	
- 96	7	601931	. SUPPORT, Hydraulic return hose cap	1	1	
		RD111-4009-0410	. BOLT (AP)	4	4	
		RD153-5002-0004	. WASHER (AP)	4	4	
		RD153-1002-0004	. WASHER (AP)	4	4	
		RD114-8005-1004	. NUT (AP)	4	4	
- 97	7	K2207-J4	. LINER, Pad (MFD by 51116)	2	2	
- 98	7	NA5-260083	. HOSE ASSY, Hydraulic return checkout valve to inlet elbow (Checkout valve engine return hose) (Brazed) (LC)	1		
- 98	7	NA5-260116	. HOSE ASSY, Hydraulic return checkout valve to inlet elbow (Checkout valve engine return hose) (Brazed) (LC)		1	
		RD111-4010-6519	. BOLT (AP)	14	14	
		RD111-4010-6525	. BOLT (AP)	2	2	
		703924	. SPACER, 5/16 bolt (AP)	2	2	
		RD153-5002-0005	. WASHER (AP)	16	16	
		RD172-0014-0033	. . TAPE (RP-1)	AR	AR	
		RD172-0014-0039	. . TAPE (FLOW)	AR	AR	
		RD172-0018-2250	. . TAPE (2250 PSI)	AR	AR	
- 99	7	703923	. BRACKET, Line flange	1	1	
-100	8	NA5-260079T2	. COUPLING ASSY, High temperature, flight half (Checkout valve engine return hose drain quick-disconnect) (LC)	1	1	
		RD111-4010-0414	. BOLT (AP)	4	4	
		RD153-5002-0004	. WASHER (AP)	4	4	
-101	8	MS28774-018	. RETAINER (LC)	2	2	
-102	8	RD262-4006-0018	. O-RING (LC)	1	1	
-103	8,9	19-406336-6	. SEAL ASSY, Plate (LC)	2	2	
-104	2,3,9,10	601909	. LINE ASSY, Actuator return (Welded) (LC)	1	1	GV
-104	2,3,9,10	601909-31	. LINE ASSY, Actuator return (Welded) (LC)		1	GJA
		RD111-4010-6519	. BOLT (AP)	8	8	
		RD111-4011-6528	. BOLT (AP)	8	8	
		RD153-5002-0005	. WASHER (AP)	32	32	
		RD153-1002-0004	. WASHER (AP)	8	8	
		RD114-8005-1005	. NUT (AP)	8	8	
		AN814-4JL	. . PLUG AND BLEEDER (Supersedes AN814-4CL) (LC)	2	2	
		RD262-3001-0004	. . GASKET (LC)	2	2	
-104A	2	KN428T4SP	. . INSERT (MFD by 29372) (LC)	4	4	
		RD172-0006-0001	. . TAPE (HYDRAULIC)	AR	AR	
		RD172-0014-0033	. . TAPE (RP-1)	AR	AR	
		RD172-0014-0039	. . TAPE (FLOW)	AR	AR	
		RD172-0018-1000	. . TAPE (2250 PSI)	AR	AR	
-105	9	19-406336-6	. SEAL ASSY, Plate (LC)	1	1	
-106	10	601973	. COVER, End, return manifold, hydraulic control system (LC)	1	1	
-107	10	19-406336-1	. SEAL ASSY, Plate (LC)	1	1	
-108	2,10	19-406332-13	. SEAL ASSY, Plate (LC)	1	1	
		RE127-2001-0004	. CLAMP	1	1	
		MS9103-14	. BRACKET	2	2	
		AN520C10R8	. SCREW (AP)	1	1	
		LD153-0010-0008	. WASHER (AP)	1	1	
		NAS679C3W	. NUT (AP)	1	1	
		RE127-2001-0004	. CLAMP	1	1	
		AN520C10R8	. SCREW (AP)	1	1	
		LD153-0010-0008	. WASHER (AP)	1	1	
		NAS679C3W	. NUT (AP)	1	1	
		RE127-2001-0004	. CLAMP	1	1	
		NAS1003-3A	. BOLT (AP)	1	1	
		LD153-0013-0001	. WASHER (AP)	1	1	
		RD153-1002-0003	. WASHER (AP)	1	1	
		NAS679C3W	. NUT (AP)	1	1	

FIG & INDEX NO	ZONE NO	PART NUMBER	1 2 3 4 5 6 7 DESCRIPTION	UNITS PER ASSY		USABLE ON CODE
20-109		DELETED				
-110		DELETED				
-110A	2, 12, 23	602060	. TUBE ASSY, Flanged, by-pass ignition monitor valve (ignition monitor valve sense tube) (Welded) (LC)	1	1	
		RD111-4011-6426	. BOLT (Intfc-hypergol manifold) (AP)	4	4	
		RD153-5002-0004	. WASHER (AP)	4	4	
		NAS620C416	. WASHER (AP)	4	4	
		RD114-8003-1004	. NUT (AP)	4	4	
		RD111-4010-6426	. BOLT (Intfc-fuel manifold) (AP)	4	4	
		RD153-5002-0004	. WASHER (AP)	4	4	
		RD172-0006-0001	. . TAPE (HYDRAULIC)	AR	AR	
		RD172-0014-0033	. . TAPE (RP-1)	AR	AR	
		RD172-0014-0039	. . TAPE (FLOW)	AR	AR	
		RD172-0018-2250	. . TAPE (2250 PSI)	AR	AR	
-110B	2	NA5-230079T2	. COUPLING ASSY, High temperature, flight half (ignition monitor valve control quick-disconnect) (LC)	1		
-110C	2	MS2874-018	. RETAINER (LC)	4	4	
-110D	2	RD262-4006-0018	. O-RING (LC)	2	2	
-111 THRU -113		DELETED				
-113A	10	NA5-260079T2	. COUPLING ASSY, High temperature, flight half (Actuator return line drain quick-disconnect) (LC)	1	1	
		RD111-4010-0414	. BOLT (AP)	4	4	
		RD153-5002-0004	. WASHER (AP)	4	4	
-114		DELETED				
-114A	10	MS28774-018	. RETAINER (LC)	2	2	
-115		DELETED				
-115A	10	RD262-4006-0018	. O-RING (LC)	1	1	
-116	9	NA5-260031	. NIPPLE ASSY, Quick disconnect, ground checkout (LC)	1	1	
		RD111-4008-0406	. BOLT (AP)	4	4	
		RD153-5002-0004	. WASHER (AP)	4	4	
-117	9	MS28774-016	. RETAINER (LC)	2	2	
-118	9	RD262-4006-0016	. O-RING (LC)	1	1	
-119	10	601946	. COVER, Return manifold, hydraulic control system (Actuator return line cover) (LC)	1	1	
		RD111-4011-6528	. BOLT (AP)	8	8	
		RD153-5002-0005	. WASHER (AP)	8	8	
		RD153-1002-0005	. WASHER (AP)	8	8	
		RD114-8005-1005	. NUT (AP)	8	8	
-120	10	19-406336-1	. SEAL ASSY, Plate (LC)	1	1	
-121		DELETED				
-122		DELETED				
-122A	2	19-406332-5	. SEAL ASSY, Plate (LC)	1	1	
-123	2	602051	. LINE ASSY, Return, ignition monitor valve (Welded) (LC)	1	1	
		RD111-4011-6426	. BOLT (Intfc-gimbal system return line) (AP)	4	4	
		RD111-4010-6419	. BOLT (Intfc-hypergol manifold) (AP)	4	4	
		RD153-5002-0004	. WASHER (AP)	8	8	
		RD153-1002-0004	. WASHER (Intfc-gimbal system return line) (AP)	4	4	
		RD114-8003-1004	. NUT (Intfc-gimbal system return line) (AP)	4	4	
		RD172-0006-0001	. . TAPE (HYDRAULIC)	AR	AR	
		RD172-0014-0033	. . TAPE (RP-1)	AR	AR	
		RD172-0014-0039	. . TAPE (FLOW)	AR	AR	
		RD172-0018-2250	. . TAPE (2250 PSI)	AR	AR	
-124	2	19-406332-13	. SEAL ASSY, Plate (LC)	1	1	
-125	6	601875	. MANIFOLD ASSY, Hydraulic filter and 4-way solenoid valve (Engine control valve) (See figure 25 for breakdown) (LC)	1	1	
		RD111-4010-0824	. BOLT (AP)	3	3	
		RD153-5002-0008	. WASHER (AP)	3	3	
-126	5, 9	308400	. VALVE ASSY, Checkout (See figure 21 for breakdown) (J30) (LC)	1	1	
		RD111-4009-0622	. BOLT (AP)	4	4	
		RD153-5002-0006	. WASHER (AP)	4	4	
		RD153-1002-0006	. WASHER (AP)	4	4	
		RD114-8005-1006	. NUT (AP)	4	4	
-127	9	601912	. BRACKET, Support, customer connect ducts	1	1	
		RD111-4010-6424	. BOLT (AP)	4	4	
		RD153-5002-0004	. WASHER (AP)	4	4	
		MS15795-310	. WASHER (AP)	8	8	
		RD114-8005-1004	. NUT (AP)	4	4	
-128	9	602063	. SUPPORT, Duct, customer connect, hydraulic	1	1	
-128A	9	RD111-4010-0611	. BOLT (AP)	2	2	
-128B	9	RD111-4010-0430	. BOLT (AP)	2	2	
-128C	9	RD153-5002-0004	. WASHER (AP)	4	4	
-128D	9	308054	. BUSHING, Support, customer connect, duct	2	2	
-128E	9	RD153-5002-0006	. WASHER (AP)	2	2	
-129	9	MS9201-07	. NUT (AP)	2	2	
-130	10	601923	. BRACKET, Support, actuator return line	2	2	
		RD111-4011-6423	. BOLT (AP)	4	4	
		RD111-4011-6521	. BOLT (AP)	4	4	

FIG & INDEX NO	ZONE NO	PART NUMBER	1 2 3 4 5 6 7 DESCRIPTION	UNITS PER ASSY		USABLE ON CODE
20-		RD153-5002-0004	. WASHER (AP)	4	4	
		RD153-5002-0005	. WASHER (AP)	4	4	
		RD153-1002-0004	. WASHER (AP)	4	4	
		RD153-1002-0005	. WASHER (AP)	4	4	
		RD114-8005-1004	. NUT (AP)	4	4	
		RD114-8005-1005	. NUT (AP)	4	4	
-131	10	K2207-36	. LINER (MFD by 51116)	2	2	
-132	10	602062	. SUPPORT ASSY, Actuator return line (Welded)	1	1	
		RD111-4009-0618	. BOLT (AP)	2	2	
		RD111-4009-0610	. BOLT (AP)	2	2	
		RD153-5002-0006	. WASHER (AP)	4	4	
		RD153-1002-0006	. WASHER (AP)	4	4	
		RD114-8005-1006	. NUT (AP)	4	4	
-133	10	601922-?	. BUSHING, Support, 4-way valve, hydraulic control system	2	2	
-134	10	601945	. COVER, Bracket, customer connect duct	1	1	
		RD111-4011-6423	. BOLT (AP)	4	4	
		RD153-5002-0001	. WASHER (AP)	4	4	
		RD153-1002-0004	. WASHER (AP)	4	4	
		RD114-8005-1004	. NUT (AP)	4	4	
-135	10	K2207-32	. LINER (MFD by 51116)	1	1	
-136	10	601927	. BRACKET, Support, customer connect duct	1	1	
-137	10	602059	. BRACKET, Hydraulic supply line	1	1	
		RD111-4010-6420	. BOLT (AP)	2	2	
		RD153-5002-0004	. WASHER (AP)	2	2	
		601950	. WASHER, Support (AP)	4	4	
		RD114-8005-1004	. NUT (AP)	2	2	
-138	10	602058	. CLAMP, Hydraulic supply line	1	1	
		RD111-4011-6418	. BOLT (AP)	1	1	
		RD153-5002-0004	. WASHER (AP)	1	1	
		RD153-1002-0004	. WASHER (AP)	1	1	
		RD114-8005-1004	. NUT (AP)	1	1	
-139	10	RR127-2002-0014	. CLAMP	1	1	
-140	12	651287	. SUPPORT, Duct, hydraulic supply line (Used on 404695)	1	1	
		RD111-4010-6416	. BOLT (AP)	2	2	
		RD153-5002-0004	. WASHER (AP)	2	2	
		RD153-1002-0004	. WASHER (AP)	2	2	
		601950	. WASHER, Support (AP)	2	2	
		RD114-8005-1004	. NUT (AP)	2	2	
-141	10	RR127-2001-0014	. CLAMP	1	1	
-142	10	RR127-2001-0020	. CLAMP	1	1	
		AN5[illegible]10R36	. SCREW (AP)	1	1	
		MAM40038-72	. SPACER (AP)	1	1	
		RD153-5010-0007	. WASHER (AP)	2	2	
		MS51[illegible]3CSW	. NUT (AP)	2	2	
-143	10	K2207-32	. LINER (MFD by 51116)	1	1	
-144	11	601970	. CAP, Support ground supply line, 1 IN	1	1	
-145	11	601969	. BASE, Support, ground supply line, 1 IN.	1	1	
		RD111-4011-6433	. BOLT (AP)	2	2	
		RD153-5002-0015	. WASHER (AP)	2	2	
		RD153-1002-0004	. WASHER (AP)	2	2	
		RD114-8005-1004	. NUT (AP)	2	2	
-146	11	K2207-34	. LINER (MFD by 51116)	2	2	
-147	11	601937	. CAP, Support, ground return line, 1-3/8 IN.	1	1	
		RD111-4009-3414	. BOLT (AP)	4	4	
		RD153-5002-0004	. WASHER (AP)	4	4	
-148	11	K2207-32	. LINER (MFD by 51116)	1	1	
-149	11	601934	. CAP, Support, actuator return line, 1-5/8 IN.	1	1	
-150	11	601933	. BASE, Support, actuator return line, 1-5/8 IN.	1	1	
		RD111-4009-3414	. BOLT (AP)	4	4	
		RD111-4010-0514	. BOLT (AP)	2	2	
		RD153-5002-0005	. WASHER (AP)	2	2	
		MS15795-312	. WASHER (AP)	2	2	
		RD153-5002-0004	. WASHER (AP)	4	4	
-151	11	K2207-34	. LINER (MFD by 51116)	2	2	
-152	11	601936	. BASE, Support, ground return line, 1-3/8 IN.	1	1	
		RD111-4009-3520	. BOLT (AP)	2	2	
		RD153-5002-0005	. WASHER (AP)	2	2	
		RD153-1002-0005	. WASHER (AP)	2	2	
		RD114-8005-1005	. NUT (AP)	2	2	
-153	11	K2207-32	. LINER (MFD by 51116)	1	1	
-154	11	601972	. ADAPTER, Support, ground return line	1	1	
		RD111-4011-6530	. BOLT (AP)	2	2	
		RD111-4010-0516	. BOLT (AP)	2	2	
		RD153-5002-0005	. WASHER (AP)	4	4	
		MS15795-312	. WASHER (AP)	6	6	

FIG & INDEX NO	ZONE NO	PART NUMBER	DESCRIPTION 1 2 3 4 5 6 7	UNITS PER ASSY		USABLE ON CODE
20-		RD114-8005-1005	. NUT (AP)	2	2	
-155	11	601920	. SUPPORT, Hydraulic line	1	1	
		RD111-4009-0614	. BOLT (AP)	2	2	
		RD111-4009-0612	. BOLT (AP)	2	2	
		RD153-5002-0006	. WASHER (AP)	4	4	
		RD153-1002-0006	. WASHER (AP)	4	4	
		RD114-8005-1006	. NUT (AP)	4	4	
-156	11	601922-5	. BUSHING, Support, 4-way valve, hydraulic control system	2	2	
-157	9	601918	. SUPPORT, Checkout valve	1	1	
		RD111-4009-0618	. BOLT (AP)	2	2	
		RD111-4009-0616	. BOLT (AP)	2	2	
		RD153-5002-0006	. WASHER (AP)	4	4	
		RD153-1002-0006	. WASHER (AP)	4	4	
		RD114-8005-1006	. NUT (AP)	4	4	
-158	9	601922-3	. BUSHING, Support, 4-way valve, hydraulic control system	2	2	
-159	6	601916	. SUPPORT, Hydraulic manifold	1	1	
		RD111-4009-0618	. BOLT (AP)	1	1	
		RD111-4009-0614	. BOLT (AP)	5	5	
		RD111-4009-0616	. BOLT (AP)	3	3	
		RD153-5002-0006	. WASHER (AP)	5	5	
		RD153-1002-0006	. WASHER (AP)	9	9	
		RD153-5003-0006	. WASHER (AP)	4	4	
		RD114-8005-1006	. NUT (AP)	5	5	
		MS9104-14	. BRACKET	2	2	
-160	6	601922-3	. BUSHING, Support, 4-way valve, hydraulic control system	1	1	
-161	16	RE127-2001-0014	. CLAMP	2	2	
-162	15, 16	RE127-2001-0006	. CLAMP	2	2	
-163 THRU -165		DELETED				
		AN520C10R10	. SCREW (AP)	1	1	
		LD153-0010-0007	. WASHER (AP)	1	1	
		NAS679C3W	. NUT (AP)	1	1	
-166	15	MS9102-29	. BRACKET	1	1	
-167	16	602145	. HOSE ASSY, Flexible, solenoid valve inlet (Redundant shutdown valve supply hose) (Welded) (LC)	1	1	
		RD111-4008-0412	. BOLT (AP)	4	4	
		AS30	. WASHER (MFD by 10630) (AP)	4	4	
-167A		AN814-4JL	. PLUG AND BLEEDER (LC)	1	1	
-168		RD262-3001-0001	. GASKET (LC)	1	1	
-168A	16	602146	. HOSE ASSY, Flexible, override shutdown supply (Redundant shutdown valve override hose) (Welded) (LC)	1	1	
		RD111-4008-0419	. BOLT (AP)	4	4	
		AS30	. WASHER (MFD by 10630) (AP)	4	4	
-169	16	19-406332-35	. SEAL ASSY, Plate (LC)	1	1	
-170	15	19-406332-35	. SEAL ASSY, Plate (LC)	1	1	
-171	16	AN919-12J	. REDUCER (Supersedes AN919-12C) (LC)	1	1	
-172	16	RD262-3001-0008	. GASKET (Age controlled packing MS29512-08 may be used as an alternate) (LC)	1	1	
-173	15	GA5833	. ELBOW (MFD by 03647) (LC)	1	1	
-174	15	RD114-1003-1004	. NUT (LC)	1	1	
-175	15	RD262-1002-0004	. RING (LC)	1	1	
-176	15	RD262-3001-0004	. GASKET (Age controlled packing MS29512-04 may be used as an alternate) (LC)	1	1	
-177		DELETED				
-178		DELETED				
-179	15	558350	. VALVE ASSY, Solenoid 3-way (Redundant shutdown valve) (See figure 24 for breakdown) (J50) (LC)	1	1	
		RD111-4008-0442	. BOLT (AP)	4	4	
		RD153-5002-0004	. WASHER (AP)	4	4	
-180		DELETED				
-180A	15	602143	. SUPPORT ASSY, Solenoid valve (Lower bracket)	1	1	
-181		DELETED				
-181A	16	602142	. SUPPORT ASSY, Solenoid valve (Upper bracket)	1	1	
		NAS1004-4A	. BOLT (AP)	2	2	
		RD111-4009-0610	. BOLT (AP)	4	4	
		RD153-5003-0004	. WASHER (AP)	2	2	
		RD153-5003-0006	. WASHER (AP)	4	4	
		RD153-1002-0006	. WASHER (AP)	4	4	
		RD114-8005-1006	. NUT (AP)	4	4	
-182	18	RD111-1010-0406	. BOLT	4	4	
-183	18	RD153-5002-0004	. WASHER	4	4	
-184	18	MS20500-428	. NUT	2	2	
-185	18	RD153-9004-0001	. WASHER	4	4	
-186	18	RD111-1010-0417	. BOLT	2	2	
-187	18	602171	. BRACKET ASSY, Damper, close line NO. 2 main oxidizer valve	1	1	
-188	18	MS20500-428	. NUT	2	2	
-189	18	RD153-1002-0004	. WASHER	2	2	

FIG & INDEX NO	ZONE NO	PART NUMBER	DESCRIPTION 1 2 3 4 5 6 7	UNITS PER ASSY		USABLE ON CODE
20-190	18	602173	. RETAINER, Damper, NO. 2 main oxidizer valve, close line (Matched set)	1	1	
-191	19	RD111-4010-0406	. BOLT	4	4	
-192	19	RD153-5002-0004	. WASHER	4	4	
-193	19	MS20500-428	. NUT	2	2	
-194	19	RD153-9004-0001	. WASHER	4	4	
-195	19	RD111-1010-6425	. BOLT	2	2	
-196	19	602176	. BRACKET ASSY, Damper, sequence line, NO. 2 oxidizer line	1	1	
-197	19	MS20500-428	. NUT	2	2	
-198	19	RD153-1002-0004	. WASHER	2	2	
-199	19	602174	. RETAINER, Damper, NO. 2 main oxidizer valve, sequence line. (Matched set)	1	1	
-200	20	RD111-4010-6509	. BOLT	4	4	
-201	20	RD153-5002-0005	. WASHER	4	4	
-202	20	RD114-8003-1004	. NUT	2	2	
-203	20	RD153-9004-0001	. WASHER	4	4	
-204	20	RD111-4011-6420	. BOLT	2	2	
-205	20	602155	. BRACKET, Support, control line, main oxidizer valve, NO. 2 side	1	1	
-205A	20	602156	. RETAINER, Damper, NO. 2 main oxidizer valve open line (Matched set)		1	
-206	20	RD111-4010-0414	. BOLT	1	1	
-207	20	RD153-5002-0004	. WASHER	1	1	
-208	20	RD114-8003-1003	. NUT	1	1	
-209	20	LD153-0013-0001	. WASHER	1	1	
-210	20	LD153-0010-0008	. WASHER	1	1	
-211	20	NAS1003-12A	. BOLT	1	1	
-212		DELETED				
-213	21	RD111-1010-6616	. BOLT	1	1	
-214	21	RD153-5002-0006	. WASHER	1	1	
-215	21	602170-3	. SPACER, Close line damper, NO. 2 main fuel valve	1	1	
-216	21	RD111-4009-0408	. BOLT	1	1	
-217	21	RD153-5002-0004	. WASHER	1	1	
-217A	21	RD153-1004-0014	. WASHER	2	2	
-218	21	602170-5	. SPACER, Close line damper, NO. 2 main fuel valve	1	1	
-219	21	602167	. BRACKET, Damper, NO. 2 main fuel valve, close line	1	1	
-220	21, 22	RD114-8003-1004	. NUT	2	2	
-221	21	LD153-0010-0010	. WASHER	2	2	
-222	21	RD153-5002-0004	. WASHER	2	2	
-223	21	RD111-1010-6427	. BOLT	1	1	
-224	21	RD111-1010-3418	. BOLT	1	1	
-225	21	RD114-8003-1004	. NUT	2	2	
-226	21	LD153-0010-0010	. WASHER	2	2	
-227	21	602168	. RETAINER, Damper, NO. 2 main fuel valve, close line (Matched set)	1	1	
-228	21	602175	. PLATE, Close line damper, NO 2 main fuel valve serrated	1	1	
-229	22	RD111-1009-0512	. BOLT	3	3	
-230	22	RD153-5002-0005	. WASHER	3	3	
-231	22	MS20500-428	. NUT	2	2	
-232	22	RD153-9004-0001	. WASHER	4	4	
-233	22	RD111-1010-6420	. BOLT	2	2	
-234	22	602185	. BRACKET, Damper, closing control line, NO. 2 main oxidizer valve	1	1	
-235	22	MS20500-428	. NUT	2	2	
-236	22	RD153-1002-0004	. WASHER	2	2	
-237	22	602173	. RETAINER, Damper, NO. 2 main oxidizer valve, close line (Matched set).	1	1	
-238	23	RD114-8003-1005	. NUT	1	1	
-239	23	RD153-5002-0005	. WASHER	1	1	
-240	23	RD153-1002-0005	. WASHER	1	1	
-241	23	RD111-4011-6522	. BOLT	1	1	
-242	23	RD114-8003-1005	. NUT	1	1	
-243	23	LD153-0010-0012	. WASHER	1	1	
-244	23	RD153-5002-0005	. WASHER	1	1	
-245	23	RD111-1010-6513	. BOLT	1	1	
-246	23	RD114-8003-1004	. NUT	2	2	
-247	23	RD153-9004-0001	. WASHER	2	2	
-248	23	RD153-5002-0004	. WASHER	2	2	
-249	23	RD111-4011-6417	. BOLT	2	2	
-250	23	RD111-1010-6416	. BOLT	2	2	
-251	23	RD153-5002-0004	. WASHER	2	2	
-252	23	602179	. RETAINER, Damper, ignition monitor valve, sense line (Matched set)	1	1	
-253	23	602178	. BRACKET ASSY, Sense line damper, ignition monitor valve	1	1	
-254	24	RE127-2001-0002	. CLAMP	6	6	
-255	24	RE127-2001-0006	. CLAMP	4	4	
		AN520C10R10	. SCREW (AP)	1	1	
		AN520C10R16	. SCREW (AP)	1	1	
		LD153-0010-0007	. WASHER (AP)	1	1	
		NAS43DD3-24	. SPACER (AP)	1	1	
		NAS679C3W	. NUT (AP)	1	1	

FIG. & INDEX NO	ZONE NO	PART NUMBER	1 2 3 4 5 6 7 DESCRIPTION	UNITS PER ASSY		USABLE ON CODE
20-256	24	408248-11	. TUBE ASSY, Main oxidizer valve, NO. 2 actuator rod seal vent ..... (See figure 6, index 67, for requirements) (LC)	REF	REF	
-257	24	AN815-4J	. UNION (Supersedes AN815-4C) (See figure 6, index 71, ... for requirements) (LC)		REF	
-258	24	RE261-3004-0004	. SEAL (Interchangeable with 12100CR4 MFD by 08199) ..... (See figure 6, index 72, for requirements) (LC)		REF	
-259	4,7	410910-11	VALVE ASSY, Fuel (NO. 1 fuel valve) (LC)	REF	REF	
-259A	3	410910-11	VALVE ASSY, Fuel (NO. 2 fuel valve) (LC)		REF	
-260	1,24	409465-21	VALVE ASSY, Oxidizer (NO. 1 oxidizer valve) (LC)		REF	
-260	1,24	409465-11	VALVE ASSY, Oxidizer (NO. 1 oxidizer valve) (LC)		REF	
-260	1,24	409465-31	VALVE ASSY, Oxidizer (NO. 1 oxidizer valve) (LC)		REF	
-260A	3	409465-21	VALVE ASSY, Oxidizer (NO. 2 oxidizer valve) (LC)		REF	
-260A	3	409465-11	VALVE ASSY, Oxidizer (NO. 2 oxidizer valve) (LC)		REF	
-260A	3	409465-31	VALVE ASSY, Oxidizer (NO. 2 oxidizer valve) (LC)		REF	
-261	8	404912	ELBOW ASSY, Fuel inlet NO. 2 (LC)	REF		
-261	8	404920	ELBOW ASSY, Fuel inlet NO. 2 (LC)		REF	
-261	8	404920-11	ELBOW ASSY, Fuel inlet NO. 2 (LC)		REF	
-262	24	407011	LINE ASSY, Dome purge, NO. 2 main oxidizer valve (Welded) ..... (NO. 2 oxidizer dome purge line) (NHA 407001) (LC)	REF	REF	
-263	4	309110	VALVE ASSY, Ball gas generator (NHA 308375-21) (LC)	REF	REF	
-263	4	306866	VALVE ASSY, Ball gas generator (NHA 308375-11, 308375-31, ... and 308375-51) (LC)	REF	REF	

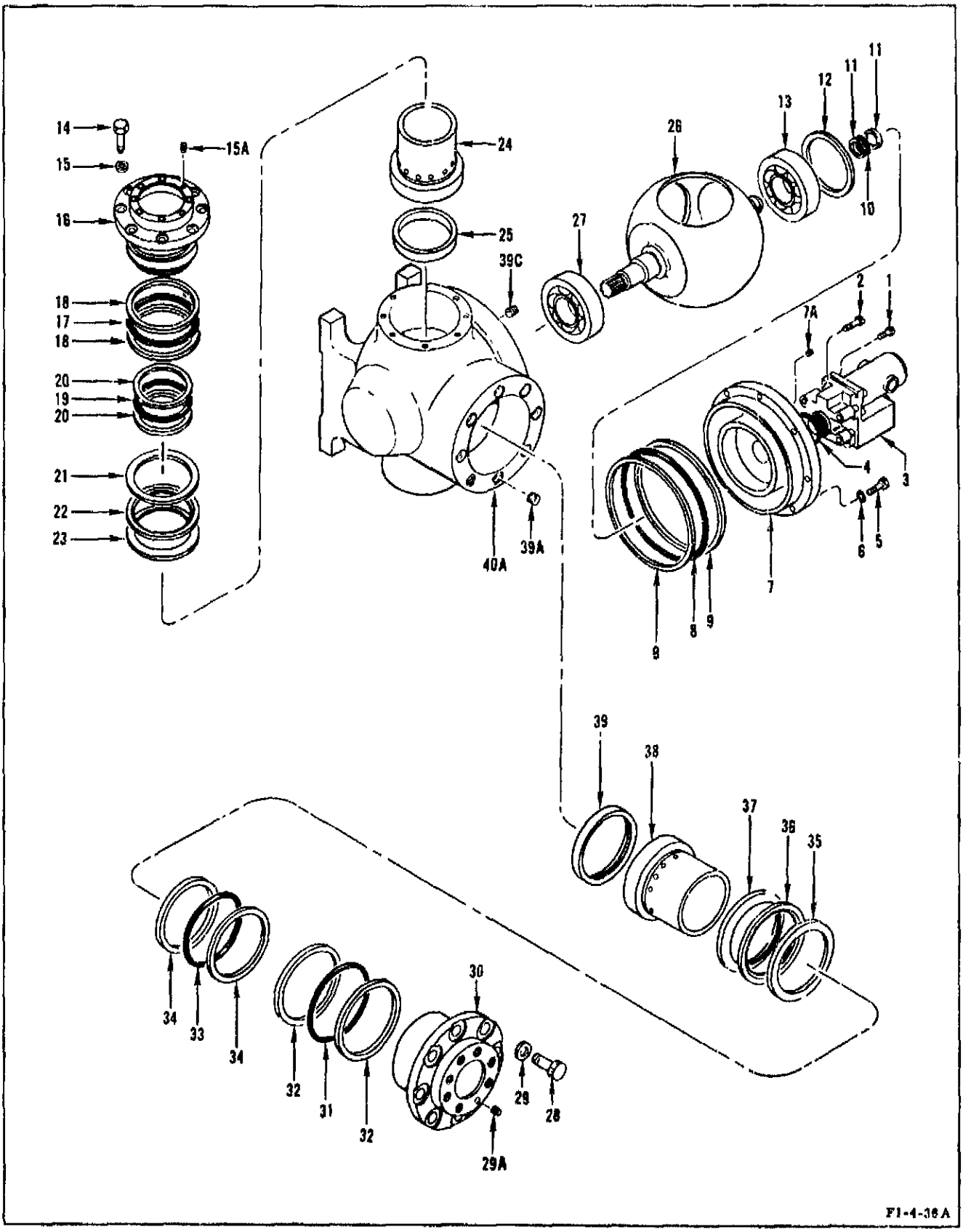

Figure 21. Checkout Valve Assembly

FIG. & INDEX NO.	ZONE NO	PART NUMBER	DESCRIPTION 1 2 3 4 5 6 7	UNITS PER ASSY.	USABLE ON CODE
21-		308400	VALVE ASSY, Checkout (See figure 20, Index 126, for REQMT) (LC)	REF	
- 1		303591-3	. SCREW, Actuator mounting, checkout valve	2	
- 2		303591	. SCREW, Actuator mounting, checkout valve	2	
- 3		308399	. ACTUATOR ASSY, Checkout valve (Not repairable in the field-- remove and replace only) (J30)	1	
- 4		MS29513-024	. PACKING (LC)	1	
- 5		RD111-1011-6622	. BOLT	8	
- 6		RD153-5004-0006	. WASHER	8	
- 7		303581	. COVER ASSY, Checkout valve (LC)	1	
- 7A		1191-3CNVX380	. . INSERT (MFD by 91767) (LC)	4	
		MS171527	. . PIN (LC)	1	
		303581-5	. . COVER, Checkout valve (LC)	1	
- 8		MS29513-249	. PACKING (LC)	1	
- 9		8-249N602-7	. RING, Backup (MFD by 83259) (LC)	2	
-10		RD262-4006-0118	. PACKING (LC)	1	
-11		MS28774-118	. RETAINER (LC)	2	
-12		303576	. SHIM, Checkout valve (LC)	1	
-13		19-308912	. BEARING ASSY, Checkout valve (LC)	1	
-14		RD111-4010-6516	. BOLT (LC)	8	
-15		RD153-5002-0005	. WASHER (LC)	8	
		303584	. RETAINER ASSY, Seal, checkout valve (LC)	1	
-15A		1191-5CNV0469	. . INSERT (MFD by 91767) (LC)	8	
-16		303584-3	. . RETAINER, Seal, checkout valve (LC)	1	
-17		MS29513-237	. PACKING (LC)	1	
-18		MS28774-237	. RETAINER (LC)	2	
-19		MS29513-234	. PACKING (LC)	1	
-20		MS28774-234	. RETAINER (LC)	2	
-21		303774	. SHIM, Retainer, checkout valve (LC)	1	
-22		303579	. SPRING, Washer, checkout valve (LC)	1	
-23		303580	. RING, Wear (LC)	1	
-24		303578	. GUIDE, Seal, checkout valve (LC)	1	
-25		303575	. SEAL, Checkout valve (LC)	1	
-26		308796	. BALL ASSY, Checkout valve (Welded) (LC)	1	
-27		19-308913	. BEARING ASSY, Checkout valve (LC)	1	
-28		RD111-4010-6516	. BOLT (LC)	8	
-29		RD153-5002-0005	. WASHER (LC)	8	
		303583	. RETAINER ASSY, Seal, checkout valve (LC)	1	
-29A		1191-4CNVX375	. . INSERT (MFD by 91767) (LC)	8	
-30		303583-3	. . RETAINER, Seal, checkout valve (LC)	1	
-31		MS29513-237	. PACKING (LC)	1	
-32		MS28774-237	. RETAINER (LC)	2	
-33		MS29513-234	. PACKING (LC)	1	
-34		MS28774-234	. RETAINER (LC)	2	
-35		303774	. SHIM, Retainer, checkout valve (LC)	1	
-36		303579	. SPRING, Washer, checkout valve (LC)	1	
-37		303580	. RING, Wear, checkout valve (LC)	1	
-38		303578	. GUIDE, Seal, checkout valve (LC)	1	
-39		309048	. SEAL, Checkout valve (LC)	1	
		308799	. HOUSING ASSY, Checkout valve (LC)	1	
-39A		1191-5CNVX468	. . INSERT (MFD by 91767) (LC)	24	
-39B		1191-4CNVX500	. . INSERT (MFD by 91767) (LC)	4	
-39C		1191-6CNVX562	. . INSERT (MFD by 91767) (LC)	8	
-40		DELETED			
-40A		308799-5	. . HOUSING, Checkout valve (LC)	1	
-41 THRU -57		DELETED			

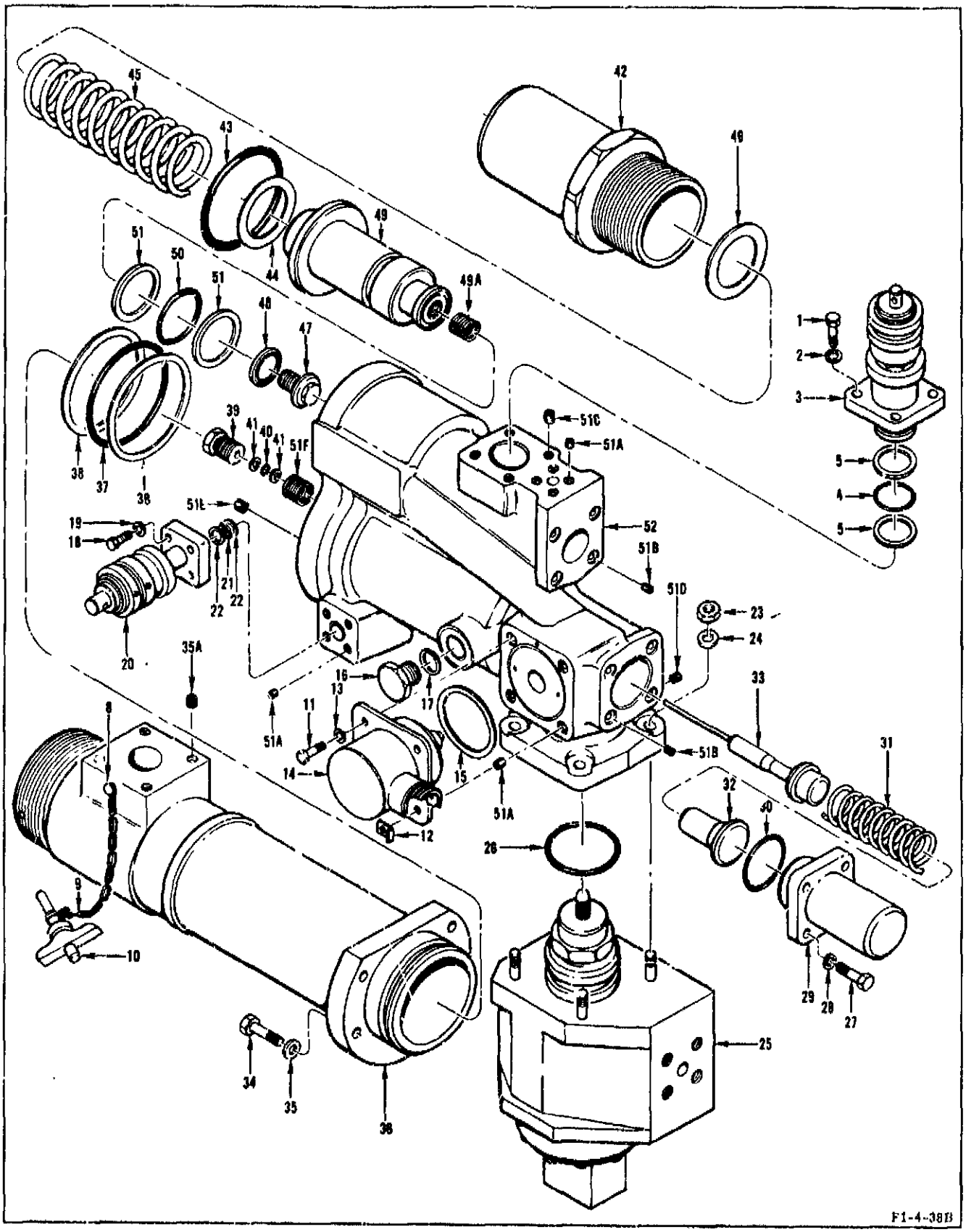

Figure 22. Hypergol Manifold Assembly

FIG & INDEX NO	ZONE NO.	PART NUMBER	DESCRIPTION 1 2 3 4 5 6 7	UNITS PER ASSY.	USABLE ON CODE
22-		407791	MANIFOLD ASSY, Hypergol (See figure 20, index 74, for REQMT) (LC)	REF	
- 1		NAS1004-5H	. BOLT	4	
- 2		LD153-0013-0002	. WASHER	4	
- 3		NA5-260079T7	. COUPLING ASSY, High temperature, flight half (Hypergol manifold purge quick-disconnect) (LC)	1	
- 4		RD262-4006-0018	. O-RING (LC)	1	
- 5		MS28774-018	. RETAINER (LC)	2	
- 6		DELETED			
- 7		DELETED			
- 8		AN535-4-4	. PIN	1	
- 9		NAS1455C00-4	. CHAIN	1	
-10		NAS1334A2C04	. PIN	1	
-11		NAS1003-2H	. BOLT	4	
-12		RD191-4002-1004	. LUG	1	
-13		LD153-0013-0001	. WASHER	4	
-14		NA5-27305	. SWITCH, Single pole, double throw (Hypergol cartridge installed switch) (J56)	1	
-15		MS29513-134	. PACKING (LC)	1	
-16		AN814-4J	. PLUG AND BLEEDER (Supersedes AN814-4C) (LC)	1	
-17		RD262-3001-0004	. PACKING (LC)	1	
-18		NAS1003-5H	. BOLT	4	
-19		LD153-0013-0001	. WASHER	4	
-20		NA5-260079T4	. COUPLING ASSY, High temperature, flight half (Hypergol manifold drain quick-disconnect) (LC)	1	
-21		RD262-4006-0012	. O-RING (LC)	1	
-22		MS28774-012	. RETAINER (LC)	2	
-23		RD114-1002-0004	. NUT	4	
-24		LD153-0013-0002	. WASHER	4	
-25		557200	. VALVE ASSY, Ignition monitor (See figure 23 for breakdown) (LC)	1	
-26		MS29513-131	. PACKING (LC)	1	
-27		NAS1004-5H	. BOLT	4	
-28		LD153-0013-0002	. WASHER	4	
-29		406115	. CAP, Cam spring (LC)	1	
-30		MS29513-125	. PACKING (LC)	1	
-31		406113	. SPRING, Compression (LC)	1	
-32		406114	. GUIDE, Cam spring (LC)	1	
-33		406112	. ROD, Cam (LC)	1	
-34		RD111-3004-0510	. BOLT	5	
-35		LD153-0013-0003	. WASHER	5	
		406118	. CONTAINER ASSY, Cartridge (LC)	1	
-35A		KNH428TSP	. . INSERT (MFD by 29372) (LC)	4	
-36		406118-3	. . BODY, Container, cartridge (LC)	1	
-37		RD262-4006-0146	. O-RING (LC)	1	
-38		MS28774-145	. RETAINER (LC)	2	
-39		406116	. NUT, Packing (LC)	1	
-40		RD262-4006-0006	. O-RING (LC)	1	
-41		MS28774-006	. RETAINER (LC)	2	
-42		403529	. CAP, Igniter fuel shutoff valve (LC)	1	
-43		MS29512-32	. PACKING (LC)	1	
-44		403532	. SHIM, Igniter fuel shutoff valve (LC)	17	
-45		403531	. SPRING, Igniter fuel shutoff valve (LC)	1	
-46		403532	. SHIM, Igniter fuel shutoff valve (LC)	1	
-47		403536	. RETAINER, Igniter fuel shutoff valve (LC)	1	
-48		9512-948327-14	. O-RING, Teflo (LC)	1	
-49		403533	. PISTON ASSY, Igniter fuel shutoff valve (LC)	1	
-49A		3591-8CNVX750	. . INSERT (MFD by 91767) (LC)	1	
-50		RD262-4006-0218	. O-RING (LC)	1	
-51		MS28782-23	. RETAINER (LC)	2	
		406110	. BODY ASSY, Hypergol manifold (LC)	1	
-51A		KNH1032TSP	. . INSERT (MFD by 29372) (LC)	12	
-51B		KNH428TSP	. . INSERT (MFD by 29372) (LC)	8	
-51C		KN428TSP	. . INSERT (MFD by 29372) (LC)	4	
-51D		KNH524TSP	. . INSERT (MFD by 29372) (LC)	3	
-51E		KN524TSP	. . INSERT (MFD by 29372) (LC)	5	
-51F		KNL624TSP	. . INSERT (MFD by 29372) (LC)	1	
-52		406110-3	. . BODY, Hypergol manifold (LC)	1	

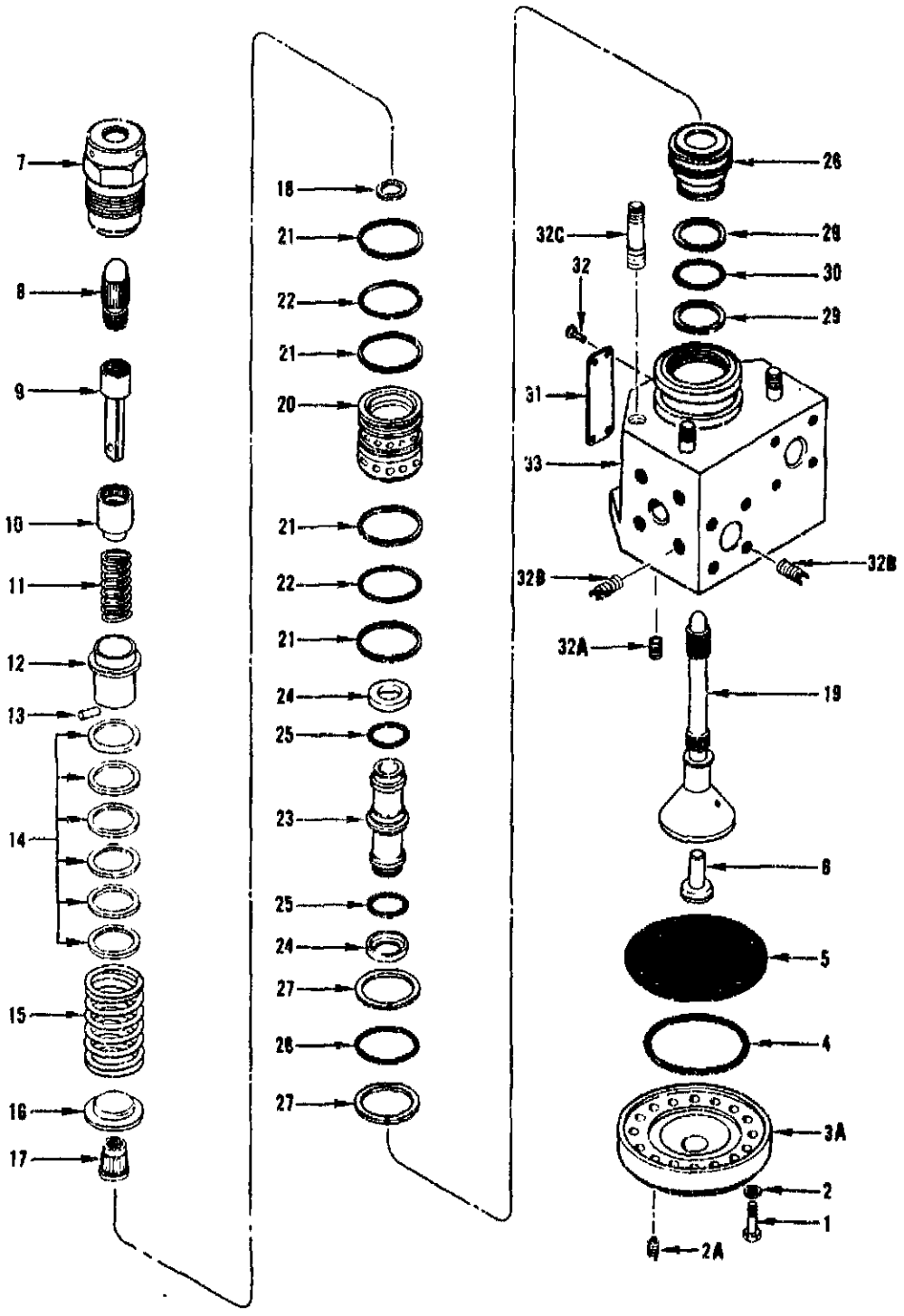

Figure 23. Ignition Monitor Valve Assembly

FIG. & INDEX NO	ZONE NO.	PART NUMBER	DESCRIPTION 1 2 3 4 5 6 7	UNITS PER ASSY.	USABLE ON CODE
23-		557200	VALVE ASSY, Ignition monitor (See figure 22, index 25, for REQMT) (LC)	REF	
- 1		AN103817	. BOLT	12	
- 2		LD153-0011-0014	. WASHER	12	
		557163	. CAP ASSY, Ignition monitor valve (LC)	1	
- 2A		KNH428SP	. . INSERT (MFD by 29372) (LC)	4	
- 3		DELETED			
- 3A		557163-3	. . CAP, Ignition monitor valve (LC)	1	
- 4		RD262-4006-0141	. PACKING (LC)	1	
- 5		555164	. DIAPHRAGM ASSY, Ignition monitor valve (Pressure formed) (LC)	1	
- 6		555159	. COVER, Ignition monitor valve (LC)	1	
- 7		550656	. CAP, Spring, Ignition monitor valve (LC)	1	
- 8		550655	. ROD, Adjusting, Ignition monitor valve (LC)	1	
- 9		550657	. BOLT, Ignition monitor valve (LC)	1	
-10		550654	. SLIDE, Ignition monitor valve (LC)	1	
-11		550652	. SPRING, Ignition monitor valve (LC)	1	
-12		550653	. GUIDE, Spring, Ignition monitor valve (LC)	1	
-13		MS171464	. PIN (LC)	1	
-14		555171	. SHIM, Ignition monitor valve (LC)	G	
-15		555698	. SPRING, Compression, Ignition monitor valve (LC)	1	
-16		555699	. GUIDE, Ignition monitor valve (LC)	1	
-17		RD114-8001-0003	. NUT (LC)	1	
-18		552998	. WASHER, Ignition monitor valve (LC)	1	
-19		555163	. BOLT, Ignition monitor valve (LC)	1	
-20		555168	. SPACER, Ignition monitor valve (LC)	1	
-21		MS28774-025	. RETAINER (LC)	4	
-22		MS29513-025	. PACKING (LC)	2	
-23		557199	. POPPET, Ignition monitor valve (LC)	1	
-24		556908	. SEAL, Ignition monitor valve (LC)	2	
-25		RD262-4006-0011	. O-RING (LC)	2	
-26		555166	. SEAT, Ignition monitor valve (LC)	1	
-27		MS28774-025	. RETAINER (LC)	2	
-28		MS29513-025	. PACKING (LC)	1	
-29		MS28774-016	. RETAINER (LC)	2	
-30		MS29513-016	. PACKING (LC)	1	
-31		RD171-1020-0001	. PLATE	1	
-32		DELETED			
		550658	. BODY ASSY, Pressure actuated valve (LC)	1	
-32A		MS124696	. . INSERT (LC)	12	
-32B		KNHL428TSP	. . INSERT (MFD by 29372) (LC)	12	
-32C		KNHS428TSP14DSP	. . STUD (MFD by 29372) (LC)	4	
-33		550658-3	. . BODY, Pressure actuated valve (LC)	1	

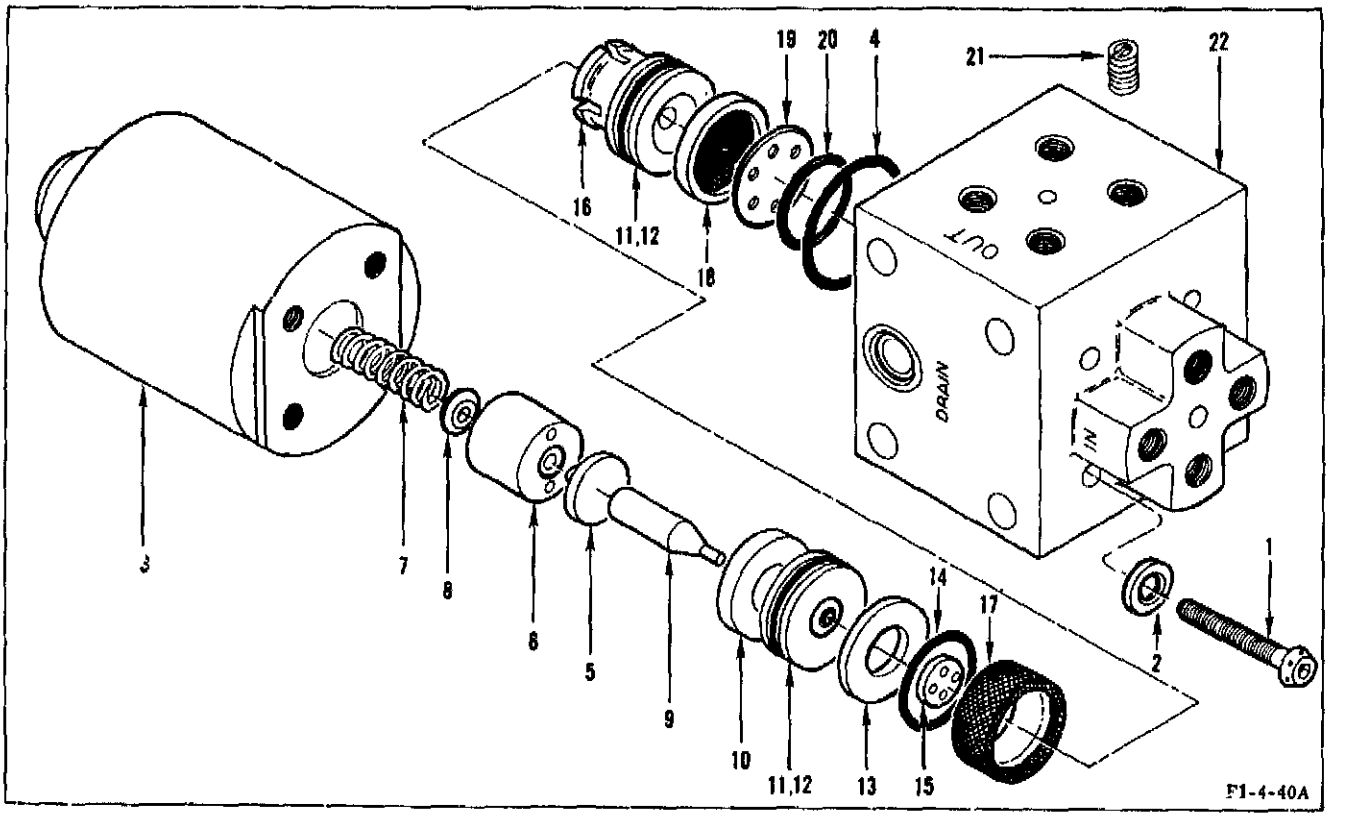

Figure 24. Three-Way Solenoid Valve Assembly (Redundant Shutdown Valve)

FIG & INDEX NO	ZONE NO	PART NUMBER	DESCRIPTION 1 2 3 4 5 6 7	UNITS PER ASSY.	USABLE ON CODE
24-		558350	VALVE ASSY, Solenoid, 3-way (Redundant shutdown valve)(See figure 20, index 179, for REQMT) (LC)	REF	
- 1		RD111-3004-0332	. BOLT	4	
- 2		556588	. WASHER, Solenoid valve, normally open	4	
- 3		558066	. SOLENOID ASSY, 4-way solenoid valve (Redundant shutdown valve) (J50)	1	
- 4		MS29513-023	. PACKING (LC)	1	
- 5		558343	. STOP, Solenoid valve, 3-way (LC)	1	
- 6		558346	. ARMATURE, Solenoid valve, 3-way (LC)	1	
- 7		558348	. SPRING, Solenoid valve, 3-way (LC)	1	
- 8		558342	. RETAINER, Solenoid valve, 3-way (LC)	1	
- 9		558338	. STEM, Solenoid valve, 3-way (LC)	1	
-10		558340	. SEAT, Vent, solenoid valve, 3-way (LC)	1	
-11		MS28774-018	. RETAINER (LC)	4	
-12		MS29513 018	. PACKING (LC)	2	
-13		558344	. SPACER, Solenoid valve, 3-way (LC)	1	
-14		MS29513-017	. PACKING (LC)	1	
-15		558341	. POPPET, Solenoid valve, 3-way (LC)	1	
-16		558339	. SEAT, Inlet, solenoid valve, 3-way (LC)	1	
-17		4228-599	. FILTER (MFD by 16989) (LC)	1	
-18		2228-51	. FILTER (MFD by 16989) (LC)	1	
-19		558347	. BAFFLE, Solenoid valve, 3-way (LC)	1	
-20		812-2-3V	. O-RING (MFD by 04319) (LC)	1	
		558349	. BODY ASSY, Solenoid valve, 3-way (LC)	1	
-21		1191-4CNVX375	. . INSERT (MFD by 91767) (LC)	4	
-22		558349-3	. . BODY, Solenoid valve, 3-way (LC)	1	

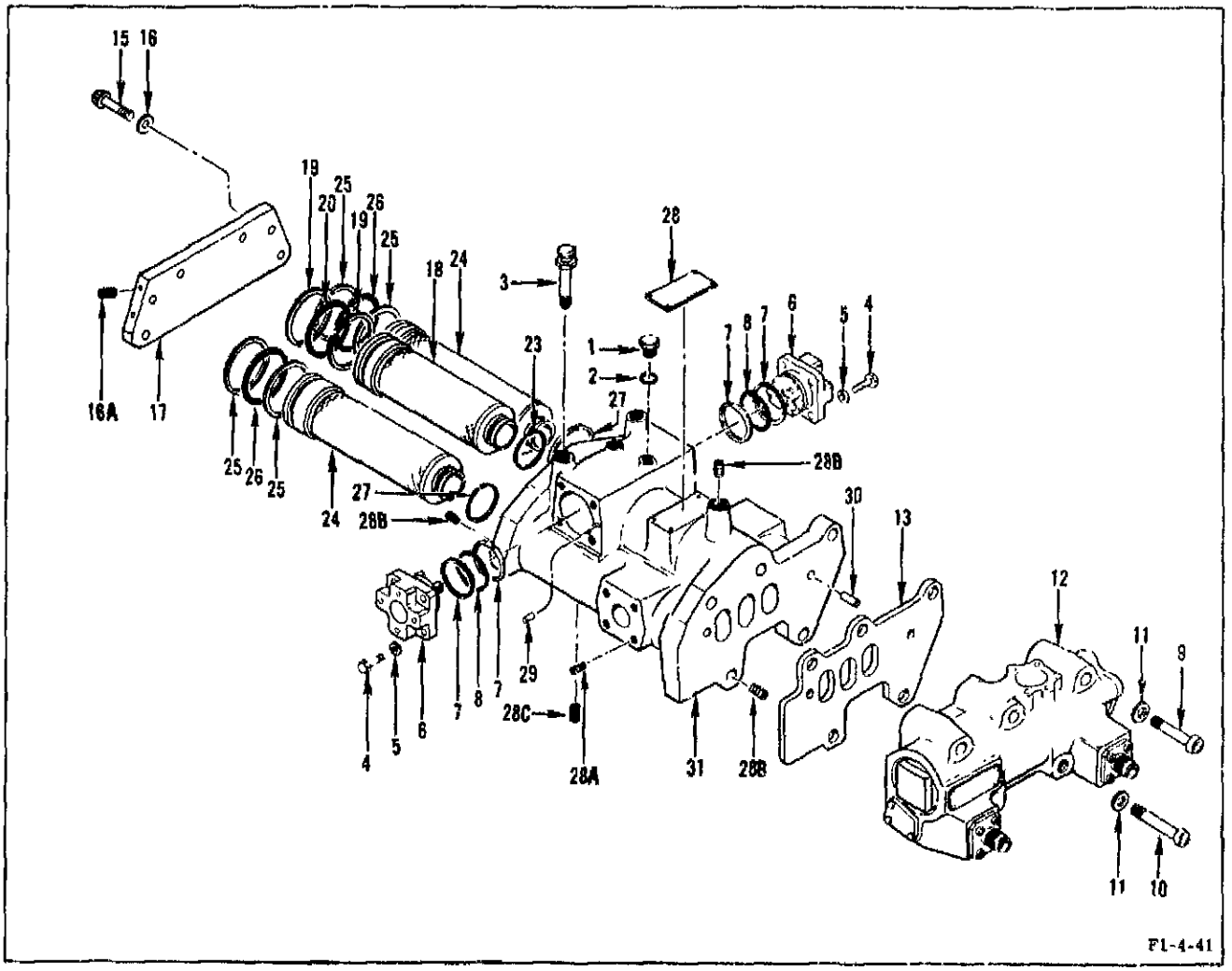

Figure 25. Hydraulic Filter and Four-Way Solenoid Valve (Engine Control Valve)

FIG & INDEX NO	ZONE NO	PART NUMBER	DESCRIPTION 1 2 3 4 5 6 7	UNITS PER ASSY	USABLE ON CODE
25-		601875	MANIFOLD ASSY, Hydraulic filter and 4-way solenoid valve (Engine control valve) (See figure 20, index 125, for REQMT) (LC)	REF	
- 1		AN814-4DL	. PLUG AND BLEEDER (Supersedes AN814-4CL) (LC)	2	
- 2		RD262-3001-0004	. GASKET (Age controlled packing MS29512-04 may be used as an alternate) (LC)	2	
- 3		RD111-9001-0020	. BOLT	3	
- 4		MS20004H8 –	. BOLT	8	
- 5		LD153-0013-0002	. WASHER	8	
- 6		601094	. VALVE ASSY, Swing check (Engine hydraulic supply check valve) (LC)	2	
- 7		MS28774-128	. RETAINER (LC)	4	
- 8		MS29513-128	. PACKING (LC)	2	
- 9		MS20006H41	. BOLT	3	
-10		MS20006H49	. BOLT	2	
-11		LD153-0013-0004	. WASHER	5	
-12		556980	. VALVE ASSY, Hydraulic control, 4-way solenoid operated (Hydraulic control valve) (See figure 26 for breakdown) (J51 and J52) (LC)	1	
-13		19-601051	. SEAL, Valve and hydraulic manifold (LC)	1	
-14		DELETED			
-15		MS20006H12	. BOLT	8	

FIG & INDEX NO	ZONE NO	PART NUMBER	1 2 3 4 5 6 , DESCRIPTION	UNITS PER ASSY	USABLE ON CODE
25-16		LD153-0013-0004	. WASHER	8	
		601098	. COVER ASSY, Plate, manifold (LC)	1	
-16A		MS124696	. . INSERT (LC)	1	
-17		601098-3	. . COVER, Manifold (LC)	1	
-18		NA5-28056	. FILTER, Main valve control (LC)	1	
-19		MS28774-138	. RETAINER (LC)	2	
-20		MS29513-138	. PACKING (LC)	1	
-21		DELETED			
-22		DELETED			
-23		MS29513-129	. PACKING (LC)	1	
-24		NA5-28060	. FILTER, Main valve control (LC)	2	
-25		MS28774-137	. RETAINER (LC)	4	
-26		MS29513-137	. PACKING (LC)	2	
-27		MS29513-123	. PACKING (LC)	2	
-28		R5-1S	. PLATE, Component name (Blank)	1	
		AN535-0-2	. SCREW (AP)	4	
		601091	. MANIFOLD ASSY, Filter, 4-way hydraulic solenoid (LC)	1	
-28A		MS124696	. . INSERT (LC)	16	
-28B		MS124698	. . INSERT (LC)	16	
-28C		MS124700	. . INSERT (LC)	3	
-29		MS171402	. . PIN (LC)	2	
-30		MS171648	. . PIN (LC)	2	
-31		601091-3	. . MANIFOLD, Filter, 4 way hydraulic solenoid (LC)	1	

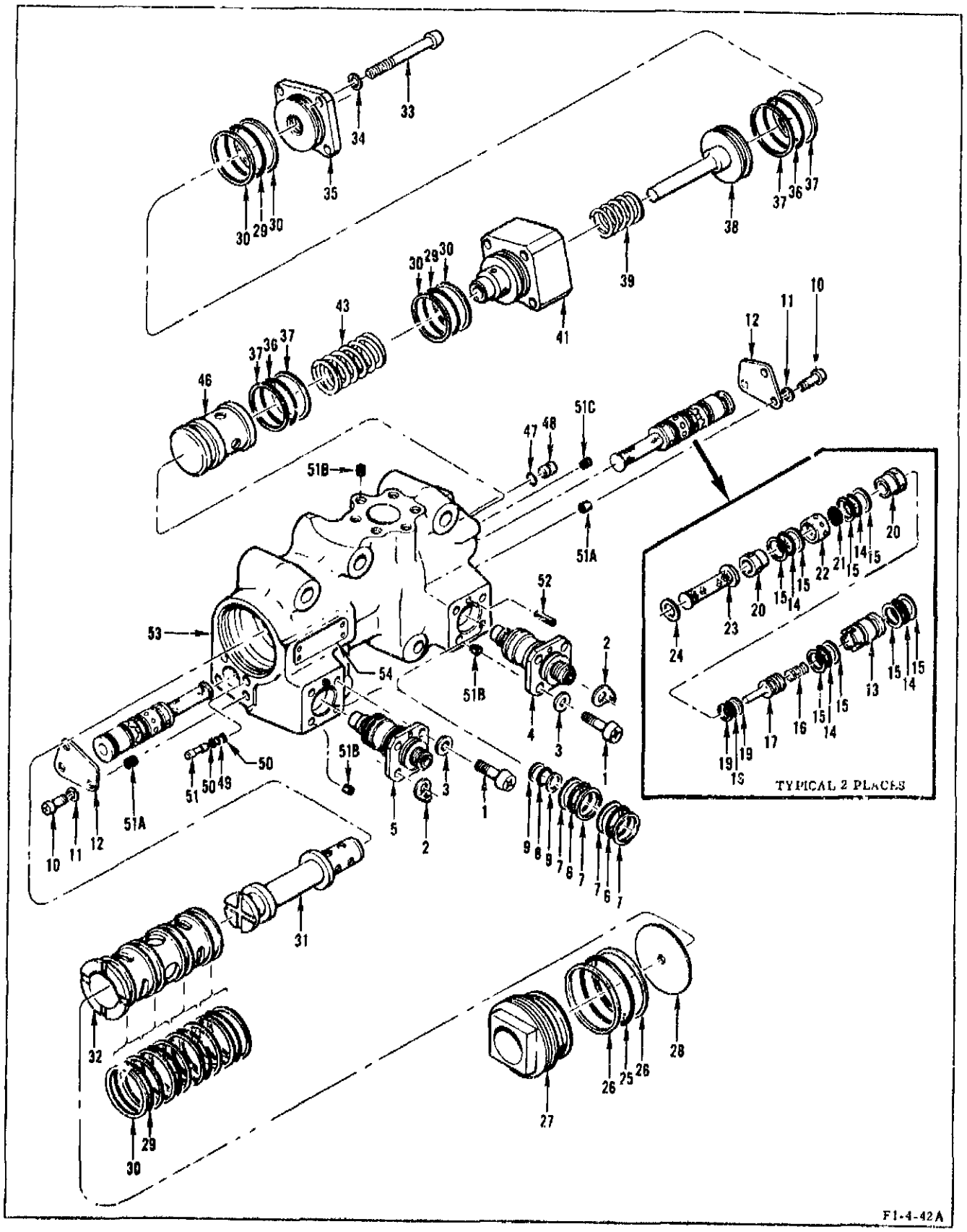

Figure 26. Hydraulic Control Valve Assembly

FIG. & INDEX NO	ZONE NO	PART NUMBER	1 2 3 4 5 6 7 DESCRIPTION	UNITS PER ASSY	USABLE ON CODE
26-		556966	VALVE ASSY, Hydraulic control, 4-way solenoid operated (See figure 25 index 12, for REQMT) (LC)	REF	
- 1		NAS1101-1H12	. SCREW	8	
- 2		RD191-4002-1005	. LUG	2	
- 3		NAS620A416L	. WASHER	6	
- 4		556508	. VALVE ASSY, Stop solenoid 4-way hydraulic control valve (Stop solenoid valve) (See figure 26A for breakdown) (J52) (LC)	1	
- 5		556511	. VALVE ASSY, Start solenoid 4-way solenoid valve (Start solenoid valve) (See figure 26A for breakdown) (J51) (LC)	1	
- 6		MS29513-022	. PACKING (LC)	4	
- 7		MS28774-022	. RETAINING (LC)	8	
- 8		MS29513-014	. PACKING (LC)	2	
- 9		MS28774-014	. RETAINER (LC)	4	
-10		NAS1101-3H10-	. SCREW	6	
-11		NAS[illegible]	. WASHER	6	
-12		55[illegible]	. PLATE, 4-way hydraulic control valve (LC)	2	
-13		5[illegible]	. CYLINDER, 4-way hydraulic control valve (LC)	2	
-14		M[illegible]016	. PACKING (LC)	8	
-15		MS[illegible]016	. RETAINER (LC)	16	
-16		5552[illegible]	. SPRING, Compression, slave, control valve (LC)	2	
-17		554472	. PISTON, 4-way hydraulic control valve (LC)	2	
-18		MS29513-012	. PACKING (LC)	2	
-19		MS28774-012	. RETAINER (LC)	4	
-20		554471	. SEAT, 4-way hydraulic control valve (LC)	4	
-21		554474	. POPPET, 4-way hydraulic control valve (LC)	2	
-22		555289	SPACER, 4-way hydraulic control valve (LC)	2	
-23		NAS-26767	. FILTER, Element, control valve (LC)	2	
24		555290	. WASHER, 4-way hydraulic control valve (LC)	2	
-25		MS29513-138	. PACKING (LC)	1	
-26		MS28774-138	. RETAINER (LC)	2	
-27		555281	CAP, 4-way hydraulic control valve (LC)	1	
-28		555283	. WASHER, 4-way hydraulic control valve (LC)	1	
-29		MS29513-130	PACKING (LC)	0	
-30		MS28774-129	. RETAINER (LC)	12	
		551477	. SPOOL AND SLEEVE ASSY, 4-way hydraulic control valve (Matched set) (LC)	1	
-31		551477-4	. . SPOOL, Control valve (Altered from 554473) (LC)	1	
-32		551477-3	. . SLEEVE, Control valve (Altered from 554475) (LC)	1	
-33		NAS1101-5H3[illegible]	SCREW	4	
-34		LD153-0011-0015	WASHER	4	
-35		555282	SPOOL, 4-way hydraulic control valve (LC)	1	
-36		MS29513-222	. PACKING (LC)	2	
-37		MS28774-222	. RETAINER (LC)	4	
-38		554476	PISTON, 4-way hydraulic control valve (LC)	1	
-39		555[illegible]	. SPRING, Compression, override (LC)	1	
-40		DELETED			
41		555314	. GUIDE, Override, 4-way hydraulic control valve (LC)	1	
42		DELETED			
-43		555321	. SPRING, Compression, main 4-way hydraulic control valve (LC)	1	
44		DELETED			
45		DELETED			
-46		554470	. ACTUATOR, 4-way hydraulic control valve (LC)	1	
-47		MS29513-010	PACKING (LC)	1	
48		556294	. PLUG, Poppet, 4-way hydraulic control valve (LC)	1	
49		MS29513-006	. PACKING (LC)	1	
-50		MS28774-006	RETAINER (LC)	2	
-51		555283	PLUG, Return, 4-way hydraulic control valve (LC)	1	
		554470	. BODY ASSY, 4-way hydraulic control valve (LC)	1	
-51A		MS124695	. . INSERT (LC)	6	
-51B		MS124696	. . INSERT (LC)	14	
-51C		MS124697	. . INSERT (LC)	4	
-52		MS171406	. . PIN (LC)	2	
-53		554476-3	. . BODY, 4-way hydraulic control valve (LC)	1	
-54		R5-18	. PLATE, Component name (Blank)	1	
		MS21318-7	. SCREW (AT)	4	

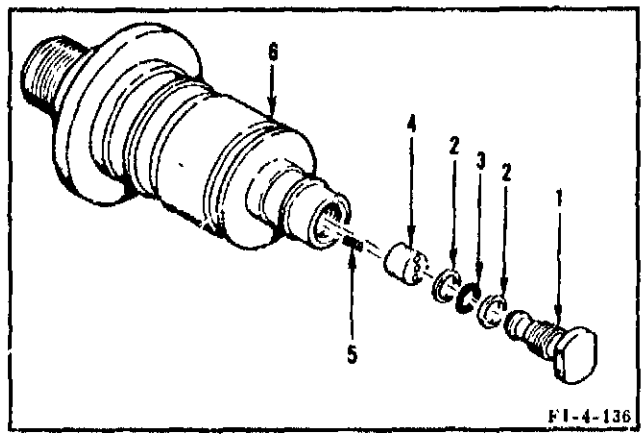

Figure 26A. Start and Stop Solenoid Valves

FIG & INDEX NO	TUNE NO	PART NUMBER	DESCRIPTION 1 2 3 4 5 6 7	UNITS PER ASSY		USABLE ON CODE
26A-		556508	VALVE ASSY, Stop, solenoid, 4-way hydraulic control valve ..... (Stop solenoid valve) (See figure 26, index 4, for REQMT)(LC)	REF		
		556511	VALVE ASSY, Start, solenoid, 4-way hydraulic control valve ..... (Start solenoid valve) (See figure 26, index 5, for REQMT)(LC)		REF	
- 1		555309	. SEAT, Solenoid operated pilot valve (LC)	1	1	
- 2		MS28774-008	. RING (LC)	1	1	
- 3		MS29513-008	. PACKING (LC)	1	1	
- 4		550378	. ARMATURE, Solenoid operated pilot valve (LC)	1	1	
- 5		555307	. SPRING, Compression, solenoid operated pilot valve (LC)	3	3	
- 6		556509	. SOLENOID ASSY, Stop, pilot valve (LC)	1		
- 6		556510	. SOLENOID ASSY, Start, pilot valve (LC)		1	

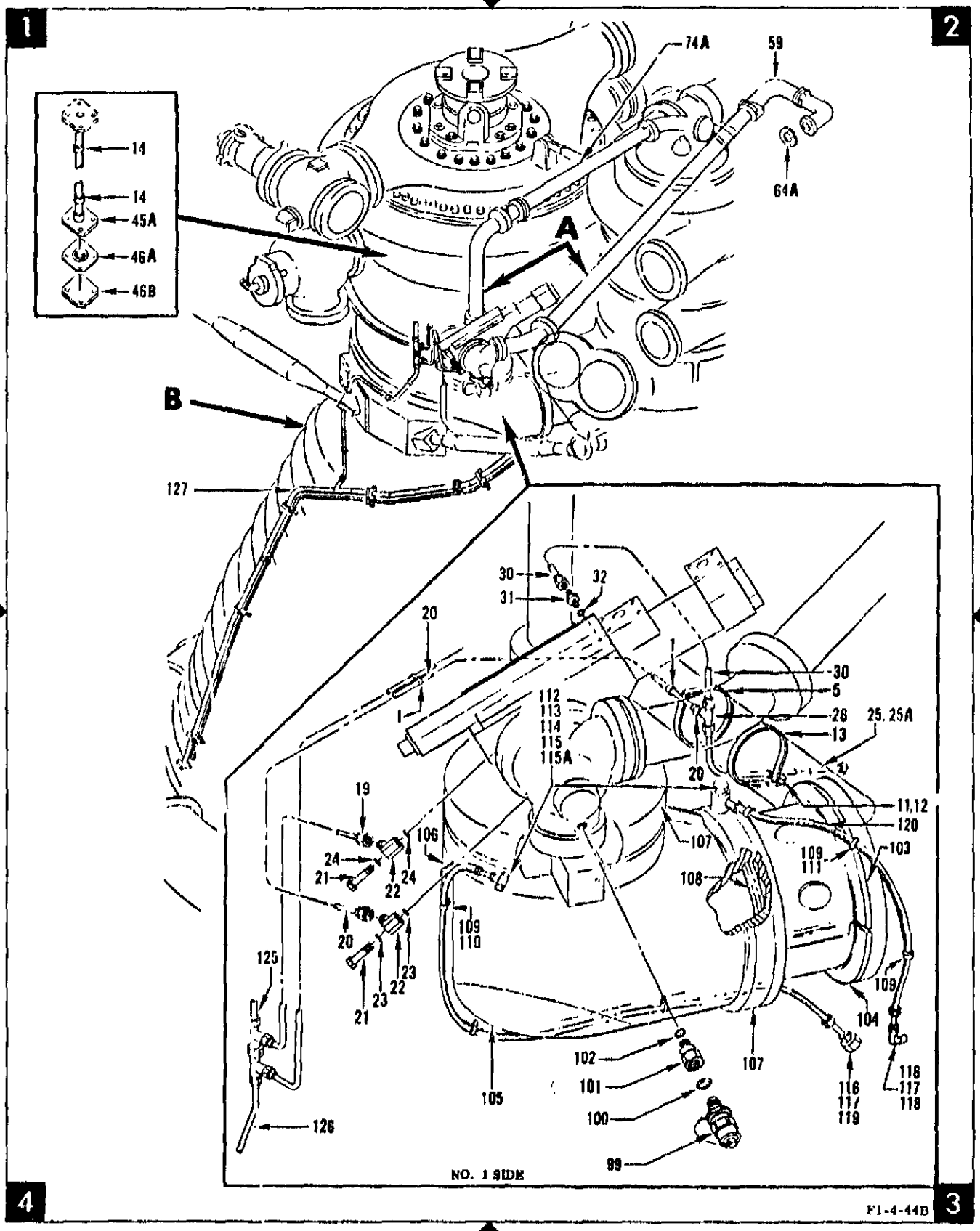

Figure 27. Gas Generator System Installation (Sheet 1 of 2)

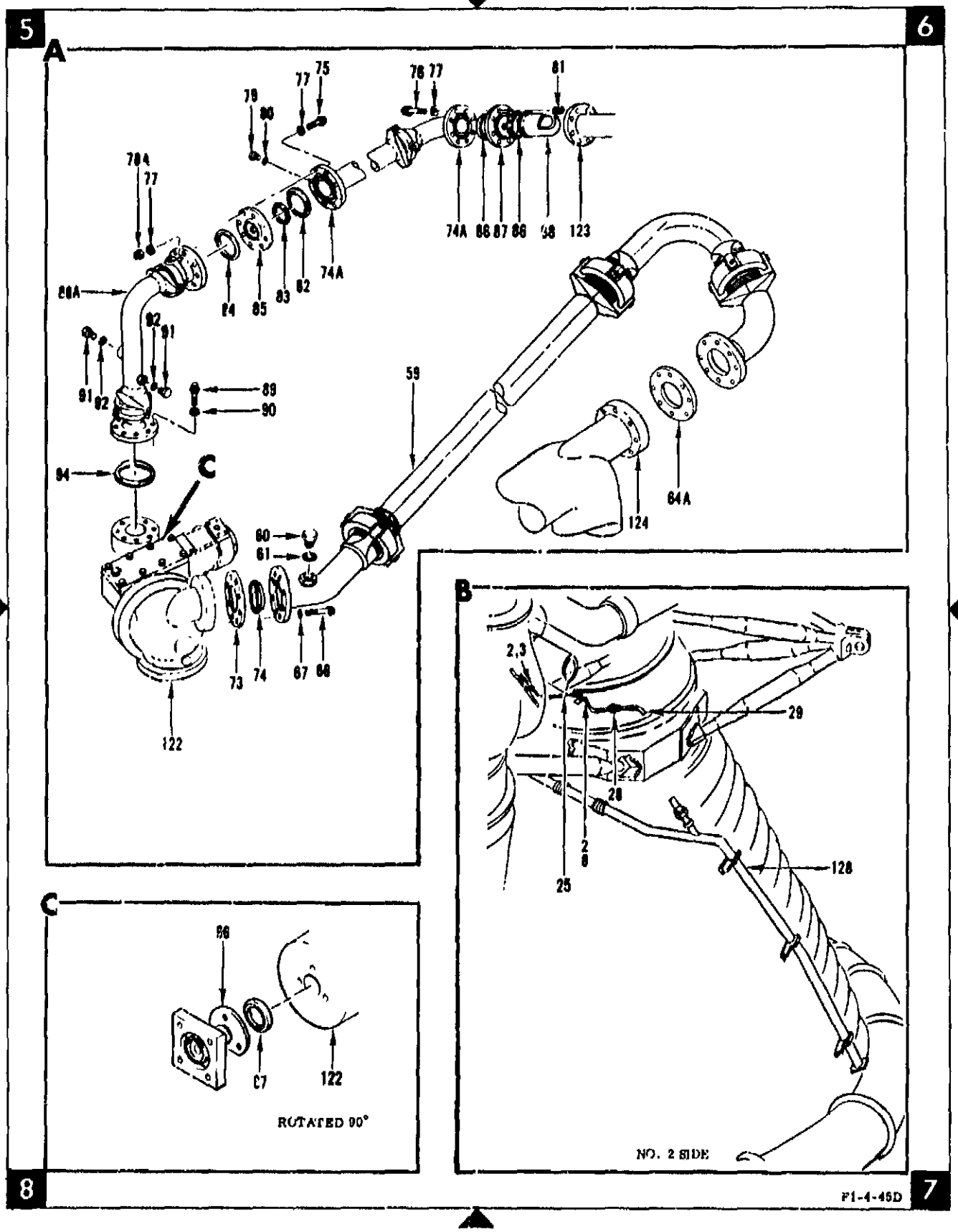

Figure 27. Gas Generator System Installation (Sheet 2 of 2)

FIG. & INDEX NO	ZONE NO	PART NUMBER	DESCRIPTION 1 2 3 4 5 6 7	UNITS PER ASSY	USABLE ON CODE
27-		308[illegible]	GAS GENERATOR SYSTEM INSTL (See figure 1, index 4, for REQMT)	REF	
- 1	4,7	RE127-2001-0002	. CLAMP	7	
- 2	7	RE127-2001-0004	. CLAMP	3	
- 3	7	RE127-2001-0006	. CLAMP	1	
- 4		DELETED			
- 5	3	RE127-2001-0033	. CLAMP	1	
- 6		DELETED			
		AN520C10R8	. SCREW (AP)	1	
		AN520C10R18	. SCREW (AP)	1	
		AN520C10R24	. SCREW (AP)	1	
		LD153-0010-0007	. WASHER (AP)	1	
		NAS679C3W	. NUT (AP)	1	
- 7		DELETED			
- 8	7	MS9104-14	. BRACKET	1	
		NAS1006-6A	. BOLT (AP)	1	
		LD153-0013-0004	. WASHER (AP)	2	
		NAS679C6	. NUT (AP)	1	
- 9		DELETED			
-10		DELETED			
-11	3	NAS43H13-40	. SPACER	1	
-12	3	RE127-2001-0004	. CLAMP	1	
-13	3	RE127-2001-0033	. CLAMP	1	
		AN520C10R24	. SCREW (AP)	1	
		LD153-0010-0007	. WASHER (AP)	1	
		NAS679C3W	. NUT (AP)	1	
-14	1	RE127-2001-0006	. CLAMP	2	
-15 THRU					
-18		DELETED			
-19	4	308038	. TUBE ASSY, LOX seal vent, ball valve shaft, gas generator (Gas generator ball valve shaft oxidizer seal vent tube (LC)	1	
		AN818-4J	. . NUT (Replaces AN818-4C for all applications)	2	
		MS20819-4J	. . SLEEVE (Replaces MS20819-4C for all applications)	2	
		RD172-0001-0001	. . TAPE (ROCKET OXIDIZER)	AR	
		RD172-0014-0011	. . TAPE (VENT)	AR	
		RD172-0014-0027	. . TAPE (LIQUID OXYGEN)	AR	
		RD172-0014-0039	. . TAPE (FLOW)	AR	
		308038-3	. . TUBE, 321 CRES, 1/4 IN. OD by 0.028 gage by 115.00 IN. LG	1	
-20	1,3,4	308073	. TUBE ASSY, Fuel seal vent, ball valve shaft, gas generator (LC)	1	
		AN818-4J	. . NUT (Replaces AN818-4C for all applications)	2	
		MS20819-4J	. . SLEEVE (Replaces MS20819-4C for all applications)	2	
		RD172-0002-0001	. . TAPE (ROCKET FUEL)	AR	
		RD172-0014-0033	. . TAPE (RP-1)	AR	
		RD172-0014-0039	. . TAPE (FLOW)	AR	
		RD172-0014-0040	. . TAPE (DRAIN)	AR	
		308073-3	. . TUBE, 321 CRES, 1/4 IN. OD by 0.028 gage by 20.00 IN. LG	1	
-21	4	600103C4	. BOLT (MFD by 08199) (LC)	2	
-22	4	500105C4	. ELBOW (MFD by 08199) (LC)	2	
-23	4	RE201-3004-1001	. SEAL (Interchangeable with 12100AA4 MFD by 08199) (LC)	2	
-24	4	RE201-3004-0004	. SEAL (Interchangeable with 12100CR4 MFD by 08199) (LC)	2	
-25	7	308223-11	. TUBE ASSY, Fuel seal vents, gas generator, tee to bushing (LC)	1	
		AN818-6J	. . NUT (Replaces AN818-6C for all applications)	2	
		MS20819-6J	. . SLEEVE (Replaces MS20819-6C for all applications)	2	
		RD172-0002-0001	. . TAPE (ROCKET FUEL)	AR	
		RD172-0014-0033	. . TAPE (RP-1)	AR	
		RD172-0014-0039	. . TAPE (FLOW)	AR	
		RD172-0014-0040	. . TAPE (DRAIN)	AR	
		308223-5	. . TUBE, 321 CRES, 3/8 IN. OD by 0.035 gage by 96.00 IN. LG	1	
-26		GA7025C404	. TEE (MFD by 03647) (Substituted by RE273-4004-4001 for spares) (LC)	1	
-26		RE273-4004-0001	. TEE (Substitutes for GA7025C404 for spares) (LC)	1	
-27		DELETED			
-28	7	AN815-6S	. UNION (Supersedes AN815-6C) (See figure 6, index 197, for REQMT) (LC)	REF	
-29	7	410819	. TUBE ASSY, Fuel seal vents, gas generator, union to tee (Gas generator fuel seal vents tube) (See figure 6, index 198 for REQMT) (LC)	REF	
-30	2,3	308072	. TUBE ASSY, Fuel seal vent, ball valve actuator, gas generator (LC)	1	
		AN818-4J	. . NUT (Replaces AN818-4C for all applications)	2	
		MS20819-4J	. . SLEEVE (Replaces MS20819-4C for all applications)	2	
		RD172-0002-0001	. . TAPE (ROCKET FUEL)	AR	
		RD172-0014-0033	. . TAPE (RP-1)	AR	
		RD172-0014-0039	. . TAPE (FLOW)	AR	
		RD172-0014-0040	. . TAPE (DRAIN)	AR	
		308072-3	. . TUBE, 321 CRES, 1/4 IN. OD by 0.028 gage by 10.00 IN. LG	1	

FIG & INDEX NO	ZONE NO	PART NUMBER	DESCRIPTION 1 2 3 4 5 6 7	UNITS PER ASSY	USABLE ON CODE
27-31	2	AN815-4J	. UNION (Supersedes AN815-4C) (LC)	1	
-32	2	RD262-3001-0004	. GASKET (LC)	1	
-33 THRU -45		DELETED			
-45A	1	308441	. TUBE ASSY, Purge, Cocoon (TIS)(LC)	1	
		RD111-1009-0437	. BOLT (AP)	4	
		LD153-0013-0002	. WASHER (AP)	4	
		RD172-0012-0001	. . TAPE (PNEUMATIC)	AR	
		RD172-0014-0030	. . TAPE (NITROGEN)	AR	
		RD172-0014-0039	. . TAPE (FLOW)	AR	
		RD172-0018-2250	. . TAPE (2250 PSI)	AR	
-46		DELETED			
-46A	1	19-406332-23	. SEAL ASSY, Plate (LC)	1	
-46B	1	308203	. COVER, Purge line (LC)	1	
		RD111-1010-6419	. BOLT (AP)	4	
		LD153-0013-0002	. WASHER (AP)	4	
		LD153-0010-0010	. WASHER (AP)	4	
		RD114-8003-1004	. NUT (AP)	4	
-47 THRU -58		DELETED			
-59	2	308978	. DUCT ASSY, Feed, fuel, gas generator (Welded) (LC)	1	
		RD111-4010-3621	. BOLT (AP)	8	
		RD111-4010-6626	. BOLT (AP)	8	
		RD153-5002-0006	. WASHER (AP)	16	
-60	2	AN814-4JL	. . PLUG AND BLEEDER (Supersedes AN814-4CL) (LC)	1	
-61	2	RD262-3001-0004	. . GASKET (LC)	1	
		RD172-0002-0001	. . TAPE (ROCKET FUEL)	AR	
		RD172-0018-3000	. . TAPE (3000 PSI)	AR	
-62 THRU -64		DELETED			
-64A	2	RD251-4108-XXXX	. ORIFICE PLATE (Orifice size determined by calibration tests) (LC)	1	AHK
-64A	2	RD251-4120-XXXX	. ORIFICE PLATE (Orifice size determined by calibration tests) (LC)	1	ECA
-65 THRU -72		DELETED			
-73	6	19-406337-4	. SEAL ASSY, Plate (LC)	1	
-74	6	308630	. DEFLECTOR, Flow, fuel feed line, gas generator (LC)	1	
-74A	2,5	308077	. DUCT ASSY, Gas generator oxidizer feed, high pressure, propellant duct end (Welded) (Gas generator oxidizer duct--duct end) (LC)	1	
-75	5	RD111-4002-0526	. BOLT (AP)	8	
-76	5	RD111-4010-6522	. BOLT (AP)	8	
-77	5	LD153-0013-0003	. WASHER (AP)	24	
-78		DELETED			
-78A	5	RD114-8003-1005	. NUT (AP)	8	
-79	5	AN814-2JL	. . PLUG AND BLEEDER (Supersedes AN814-2CL) (LC)	1	
-80	5	RE261-3004-0002	. . SEAL (Interchangeable with 12100CR2 MFD by 08199) (LC)	1	
		RD172-0001-0001	. . TAPE (ROCKET OXIDIZER)	AR	
		RD172-0001-0002	. . TAPE (LIQUID OXYGEN)	AR	
		RD172-0014-0039	. . TAPE (FLOW)	AR	
		RD172-0018-2500	. . TAPE (2500 PSI)	R	
-81	2,5	KNHL524T139P	. . INSERT (MFD by 20372) (NHA 308201)	1	
-82	5	RD261-3010-0042	. SEAL (LC)	1	
-83	5	RD261-3010-0028	. SEAL (LC)	1	
-84	5	RD261-3010-0036	. SEAL (LC)	1	
-85	5	RD251-1072-XXXX	. ORIFICE PLATE (Orifice size determined by calibration tests) (LC)	1	
-85	5	RD251-4130-XXXX	. ORIFICE PLATE (Orifice size determined by calibration tests) (LC)	1	ECA
-86	6	RD261-3010-0033	. SEAL (LC)	2	
-87	6	RD251-4071-XXXX	. ORIFICE PLATE (Orifice size determined by calibration tests) (LC)	1	ECA
-87		RD251-4131-XXXX	. ORIFICE PLATE (Orifice size determined by calibration tests) (LC)	1	GRA
-87	6	RD251-4131-XXXX	. ORIFICE PLATE (Orifice size determined by calibration tests) (LC)	1	GSA
-88	6	307989	. SCOOP, Oxidizer, gas generator feed line (LC)	1	
-88A	5	308031 -31	. LINE ASSY, Oxidizer feed, ball valve end (Gas generator oxidizer duct (Valve end) (Welded) (LC)	1	
-89	5	RD111-4010-6521	. BOLT (AP)	8	
-90	5	RD153-5002-0005	. WASHER (AP)	8	
-91	5	AN814-4JL	. . PLUG AND BLEEDER (Supersedes AN814-4CL) (LC)	3	
-92	5	RE261-3004-0004	. . SEAL (Interchangeable with 12100CR4 MFD by 08199) (LC)	4	
		RD172-0001-0001	. . TAPE (ROCKET OXIDIZER)	AR	
		RD172-0001-0002	. . TAPE (LIQUID OXYGEN)	AR	
		RD172-0014-0039	. . TAPE (FLOW)	AR	
		RD172-0018-2500	. . TAPE (2500 PSI)	AR	
-93		DELETED			

FIG & INDEX NO	ZONE NO	PART NUMBER	DESCRIPTION 1 2 3 4 5 6 7	UNITS PER ASSY	USABLE ON CODE
27-		AN814-4JL	. PLUG AND BLEEDER (Supersedes AN814-4CL) (LC)	1	
		RE261 3004-0004	. SEAL (Interchangeable with 12100CR4 MFD by 08199) (LC)	1	
-94	5	RD261-3010-0042	. SEAL (LC)	1	
-95		DELETED			
-96	8	308915	. VALVE ASSY, check, purge (Gas generator oxidizer purge check valve) (See figure 17 for breakdown) (LC)	1	
		RD111-1009-3415	. BOLT (AP)	3	
		RD153-5002-0004	. WASHER (AP)	3	
-97	8	RD261-3010-0009	. SEAL (LC)	1	
-98		DELETED			
-99	3	308206	. COUPLING ASSY, High temperature, flight half (Gas generator ball valve fuel inlet drain quick-disconnect) (LC)	1	
-100	3	RD262-3001-0006	. GASKET (LC)	1	
-101	3	308058-3	. ADAPTER, Quick disconnect, gas generator ball valve (LC)	1	
-102	3	RD262-3001-0004	. GASKET (LC)	1	
-103	3	308644	. SHIELD ASSY, Upper, gas generator (Welded)	1	
-104	3	308645	. SHIELD ASSY, Lower, gas generator (Welded)	1	
		NAS1004-7A	. BOLT (AP)	20	
		LD153-0013-0002	. WASHER (AP)	20	
		LD153-0010-0000	. WASHER (AP)	20	
		NAS679C4W	. NUT (AP)	20	
-105	3	308355-11	. COVER ASSY, Combustion chamber, gas generator (R/A replaced 308292-3)	1	
-106	4	308355-12	. COVER ASSY, Combustion chamber, gas generator (R/A replaced 308292-4)	1	
		RD111-1010-6311	. BOLT (AP)	16	
		LD153-0013-0001	. WASHER (AP)	16	
		LD153-0010-0008	. WASHER (AP)	16	
		RD114-8003-1003	. NUT (AP)	16	
-107	3	308375-21	. GAS GENERATOR ASSY (See figure 28 for breakdown) (LC)	1	DPB
-107	3	308375-41	. GAS GENERATOR ASSY (See figure 28 for breakdown) (LC)	1	GPB
-107	3	308375-11	. GAS GENERATOR ASSY (See figure 28 for breakdown) (LC)	1	EHB
-107	3	308375-31	. GAS GENERATOR ASSY (See figure 28 for breakdown) (LC)	1	EVC
-107	3	308375-51	. GAS GENERATOR ASSY (See figure 28 for breakdown) (LC)	1	GGA
-107	3	308375-61	. GAS GENERATOR ASSY (See figure 28 for breakdown) (LC)	1	GPB
		RD111-4004-0812	. BOLT (AP)	24	
		LD153-0013-0000	. WASHER (AP)	24	
-108	3	408793	. SEAL, Pressure-actuated, hot gas (LC)	1	
-109	3, 4	RE127-2001-0005	. CLAMP	5	
		AN520C10R10	. SCREW (AP)	1	
		LD153-0010-0007	. WASHER (AP)	1	
		NAS679C3W	. NUT (AP)	1	
-110	4	MS9101-15	. BRACKET	1	
-111	3	MS9102-49	. BRACKET	1	
-112	3	500103C4	. BOLT (MFD by 08199) (LC)	2	
-113	3	RE261-3004-1004	. SEAL (Interchangeable with 12100AA4 MFD by 08199) (LC)	4	
-114	3	RD261-6001-0001	. GASKET (LC)	2	
-115	3	500110-1	. ELBOW (MFD by 08199) (LC)	2	
-115A	3	AN814C4-2	. BUSHING (LC)	2	
-116	3	NAS679C7	. NUT	2	
-117	3	LD153-0010-0015	. WASHER	4	
-118	3	GA7091	. ELBOW (MFD by 03647) (LC)	1	
-119	3	GA7090	. UNION (MFD by 03647) (LC)	1	
-120	3	703202-141	. HOSE ASSY, Flexible (Gas generator turbine seal vent hose) (LC)	1	
-121	4	703202-321	. HOSE ASSY, Flexible (Gas generator injector seal vent hose) (LC)	1	
-122	8	309110	VALVE ASSY, Ball, gas generator (LC)	REF	
-122	8	306806	VALVE ASSY, Ball, gas generator (LC)	REF	
-123	0	408816	DUCT ASSY, Oxidizer, high pressure, NO. 2 (Welded) (LC)	REF	
-124	0	408818	DUCT ASSY, Fuel, NO. 2, high pressure (LC)	REF	
-125	4	408246	TUBE ASSY, Main oxidizer valve NO. 1, actuator rod seal vent (LC)	REF	
-126	4	410082	TUBE ASSY, Drain oxidizer (LC)	REF	
-127	1	408245	LINE ASSY, Drain, oxidizer overboard (LC)	REF	
-128	7	408243	LINE ASSY, Drain, fuel (LC)	REF	

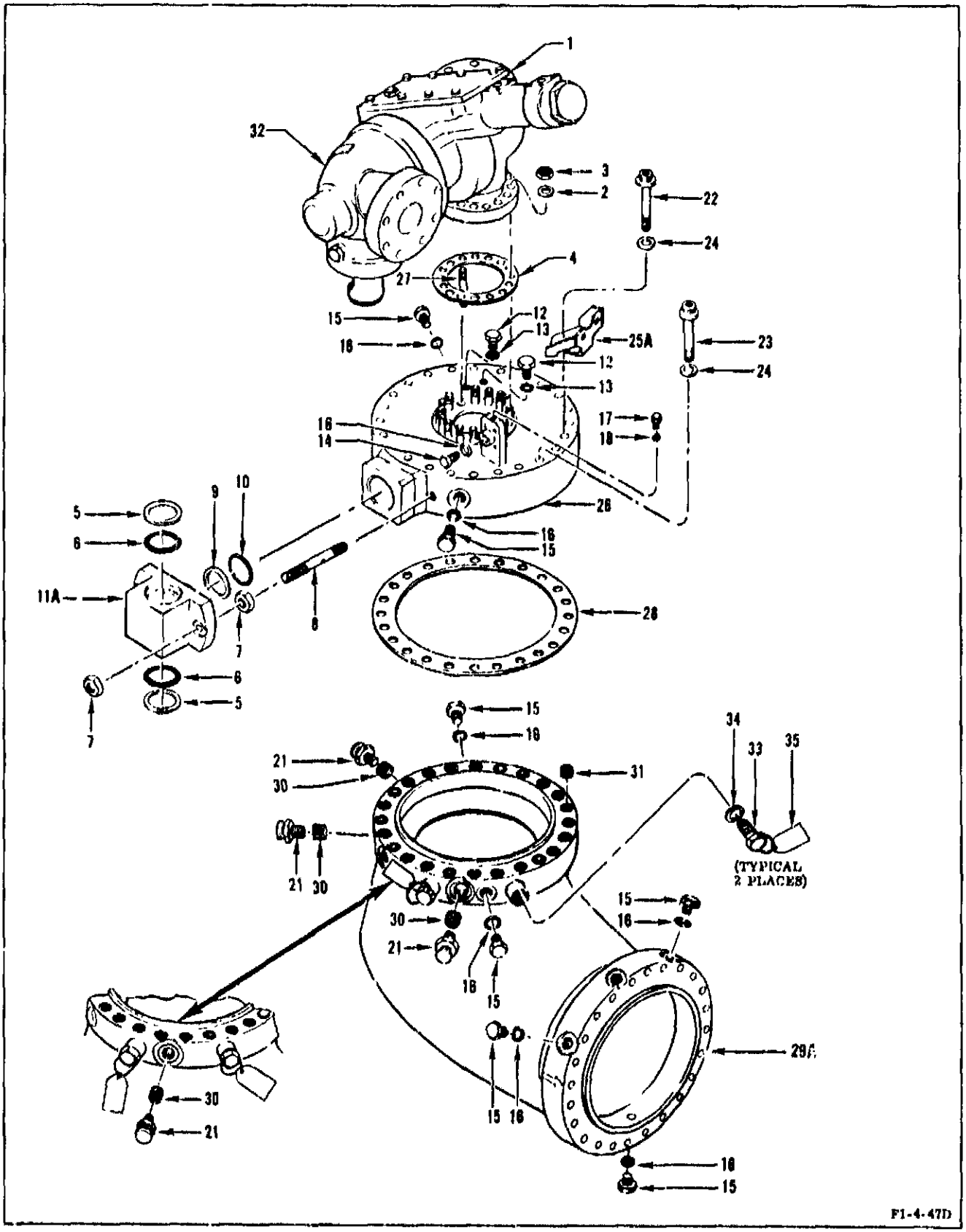

Figure 28. Gas Generator Assembly

FIG & INDEX NO	ZONE NO	PART NUMBER	DESCRIPTION 1 2 3 4 5 6 7	UNITS PER ASSY				USABLE ON CODE
28-		308375-21	GAS GENERATOR ASSY (See figure 27, index 107, for REQMT) (LC)	REF				
		308375-41	GAS GENERATOR ASSY (See figure 27, index 107, for REQMT) (LC)		REF			
		308375-11	GAS GENERATOR ASSY (See figure 27, index 107, for REQMT) (LC)			REF		
		308375-31	GAS GENERATOR ASSY (See figure 27, index 107, for REQMT) (LC)				REF	
		308375-51	GAS GENERATOR ASSY (See figure 27, index 107, for REQMT) (LC)				REF	
		308375-61	GAS GENERATOR ASSY (See figure 27, index 107, for REQMT) (LC)				REF	
- 1		309110	. VALVE ASSY, Ball, gas generator (See figure 29 for breakdown) (J53) (LC)	1	1			
- 1		306866	. VALVE ASSY, Ball, gas generator (See figure 29 for breakdown) (J53) (LC)			1	1	
- 2		LD153-0010-0011	. WASHER (AP)	16	16	16	16	
- 3		RD114-8003-1005	. NUT (AP)	16	16	16	16	
- 4		306066	. SEAL, Pressure-actuated (LC)	1	1	1	1	
- 5		MS28774-227	. RETAINER (LC)	2	2	2	2	
- 6		MS29513-227	. PACKING (LC)	2	2	2	2	
- 7		NAS509-6	. NUT	4	4	4	4	
- 8		302698	. STUD, Tee support	2	2	2	2	
- 9		MS28774-226	. RETAINER (LC)	1	1	1	1	
-10		MS29513-226	. PACKING (LC)	1	1	1	1	
-11		DELETED						
-11A		309126	. HOUSING, Tee, fuel inlet, gas generator injector (LC)	1	1	1	1	
-12		AN814-4JL	. PLUG AND BLEEDER (Supersedes AN814-4CL) (LC)	2		2		
-12		AN814-4JL	. PLUG AND BLEEDER (Supersedes AN814-4CL) (LC)		1		1	
-13		RE261-3004-0004	. SEAL (Interchangeable with 12100CR4 MFD by 08190) (LC)	2	1	2	1	
-14		MS9015-04	. PLUG (LC)	1	1	1	1	
-15		RD273-6003-0004	. PLUG (NHA 308375-11 THRU 308375-61) (LC)	5	5	5	5	
-15		RD273-6003-0004	. PLUG (NHA 308375-11, 308375-21, 308375-41, and 308375-61 only) (LC)	2	2	2	2	
-15		RD273-6003-0004	. PLUG (NHA 308375-31 and 308375-51 only) (LC)				1	
-16		RE261-3004-1004	. SEAL (Interchangeable with 12100AA4 MFD by 08190) (NHA 308375-11 THRU 308375-61) (LC)	6	6	6	6	
-16		RE201-3004-1004	. SEAL (Interchangeable with 12100AA4 MFD by 08190) (NHA 308375-11, 308375-21, 308375-41, and 308375-61 only) (LC)	2	2	2	2	
-16		PE261-3004-1004	. SEAL (Interchangeable with 12100AA4 MFD by 08190) (NHA 308375-31 and 308375-51 only) (LC)				1	
-17		MS9015-02	. PLUG (LC)	1	1	1	1	
-18		RE261-3004-1002	. SEAL (Interchangeable with 12100AA2 MFD by 08190) (LC)	1	1	1	1	
-19		DELETED						
-20		DELETED						
-21		RD111-9001-0010	. BOLT	3	3	3	3	
-22		RD111-4008-3042	. BOLT	2	2	2	2	
-23		RD111-4008-3040	. BOLT	21	21	21	21	
-24		RD153-5002-0006	. WASHER	23	23	23	23	
-25		DELETED						
-25A		308371	. BRACKET, Support pressure transducer	1	1	1	1	
-26		308374	. INJECTOR ASSY, Gas generator (Brazed) (LC)	1				
-26		309149	. INJECTOR ASSY, Gas generator (Brazed) (LC)			1		
-26		309149-11	. INJECTOR ASSY, Gas generator (Brazed) (LC)		1		1	
-27		KNH8524T10	. . STUD (MFD by 20372) (LC)	10	10	10	10	
-28		408704	. SEAL, Pressure-actuated, hot gas (LC)	1	1	1	1	
-29		DELETED						
-29A		308302-21	. CHAMBER ASSY, Combustion (Gas generator combustor) (Welded) (LC)	1	1	1	1	
-29A		308302-31	. CHAMBER ASSY, Combustion (Gas generator combustor) (Welded) (NHA 308375-31 and 308375-51 only) (LC)				1	
-30		3991-0CNX562	. . INSERT (MFD by 91767) (LC)	3	3	3	3	
-31		KNH624MX10	. . INSERT (MFD by 29372) (LC)	24	24	24	24	
-32		RD171-1020-0001	. PLATE	1	1	1	1	
-33		ST3950122RKL003	PLUG, Port, Igniter, gas generator (NHA ST3950122RKL001) (Plug MS9015-08 may be used as an alternate) (LC)	2	2	2	2	
-34		051912-3	GASKET, Igniter, high voltage, copper crush (NHA 051990-11) (Gasket AN901-8C may be used as an alternate with plug MS9015-08) (LC)	2	2	2	2	
-35		ST3950122RKL005	STREAMER, Port, Igniter, gas generator (NHA ST3950122RKL001)	2	2	2	2	

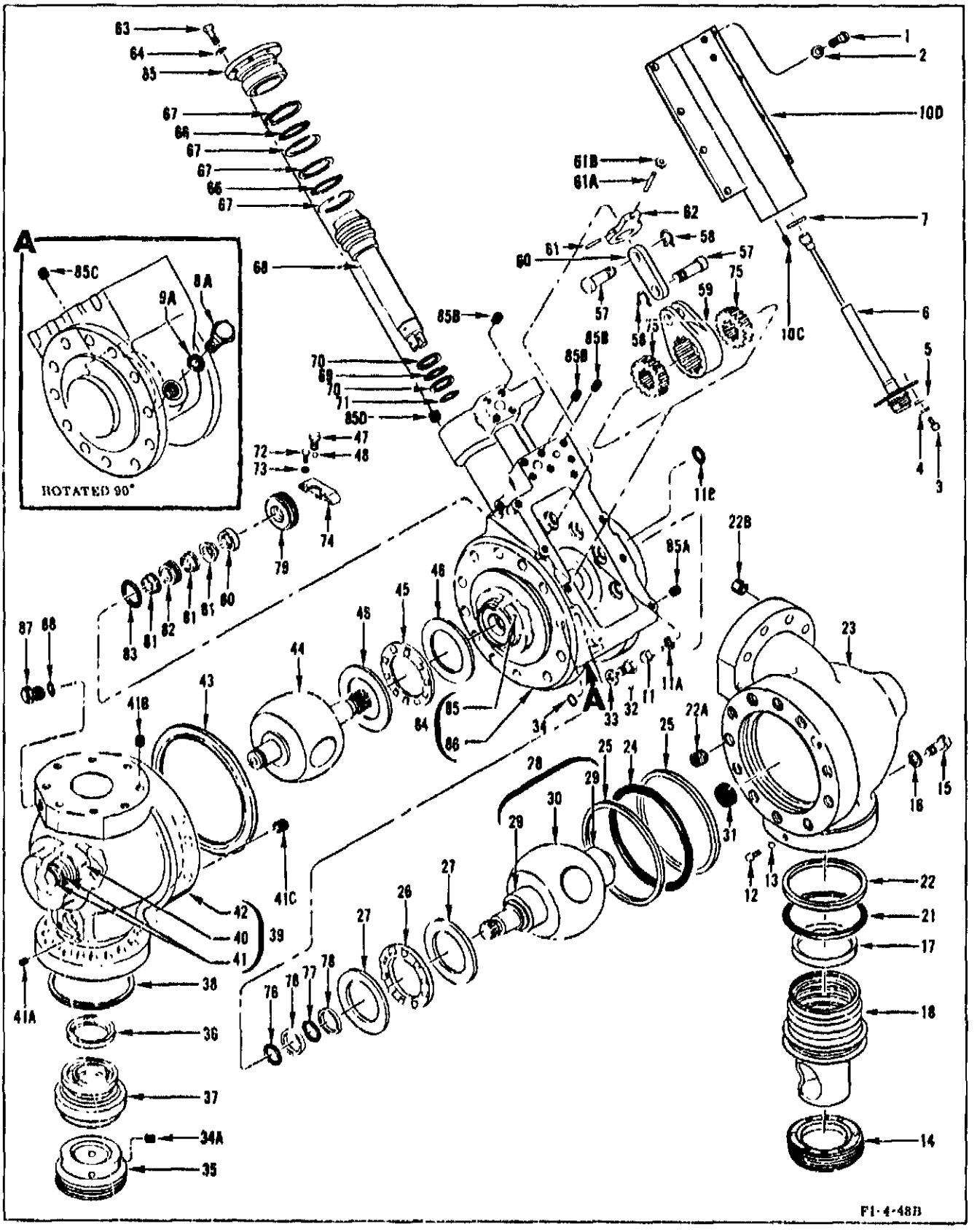

Figure 29. Gas Generator Ball Valve Assembly

FIG & INDEX NO	ZONE NO	PART NUMBER	1 2 3 4 5 6 7 DESCRIPTION	UNITS PER ASSY		USABLE ON CODE
29-		309110	VALVE ASSY, Ball, gas generator (See figure 28, index 1, for REQMT)(LC).	REF		
		306866	VALVE ASSY, Ball, gas generator (See figure 28, index 1, for REQMT)(LC).		REF	
- 1		MS35276-264	. SCREW	8	8	
- 2		LD163-0010-0007	. WASHER	8	8	
- 3		NAS1101C05H6	. SCREW	4	4	
- 4		LD153-0010-0004	. WASHER	4	4	
- 5		RD191-4002-0003	. LUG	1	1	
- 6		NA5-27443	. SWITCH ASSY, Single pole double throw (Gas generator ball valve position switch) (J53)	1	1	
- 7		MS29513-114	. PACKING (LC)	1	1	
- 8		DELETED				
- 8A		552994	. VALVE ASSY, Relief, 1/4 inch, vent port (LC)	1	1	
- 9		DELETED				
- 9A		MS28778-4	. PACKING (LC)	1	1	
-10 THRU -10B		DELETED				
		309109	. COVER ASSY, Potentiometer housing, ball valve, gas generator (LC)	1	1	
-10C		MS21209C0620	. . INSERT (LC)	4	4	
-10D		309109-3	. . COVER, Potentiometer housing, ball valve, gas generator (LC)	1	1	
-11		RD111-1009-6623	. BOLT (LC)	12	12	
-11A		LD153-0013-0004	. WASHER (LC)	12	12	
-11B		MS28775-013	. PACKING (LC)	5	5	
-12		NAS1101C3H10	. SCREW (LC)	1	1	
-13		303269	. BALL, Dual ball valve (LC)	1	1	
-14		302942	. RETAINER, Seal ball valve, fuel (LC)	1	1	
-15		305071	. SCREW, Locating, ball valve (LC)	1	1	
-16		LD153-0010-0007	. WASHER (LC)	1	1	
		308503	. SEAL ASSY, Dual ball valve, bellows type, fuel (LC)	1	1	
-17		302789	. . SEAL, Fuel, ball valve (LC)	1	1	
-18		308502	. BELLOWS ASSY, Fuel, dual ball valve (Welded) (LC)	1	1	
-19		DELETED				
-20		DELETED				
-21		MS29513-235	. PACKING (LC)	1	1	
-22		302941	. SHIM, Dual ball valve (LC)	1	1	
		302930	. HOUSING ASSY, Fuel, ball (LC)	1	1	
-22A		1191-6CNVX562	. . INSERT (MFD by 91767) (LC)	12	12	
-22B		1191-6CNVX750	. . INSERT (MFD by 91767) (LC)	8	8	
-23		302930-5	. . HOUSING, Fuel, vall (LC)	1	1	
-24		MS29513-246	. PACKING (LC)	1	1	
-25		MS28774-246	. RETAINER (LC)	2	2	
-26		FA30827	. BEARING (MFD by 80657) (LC)	1	1	
-27		JD30826	. RACE (MFD by 80657) (LC)	2	2	
-28		No Number	. BALL ASSY, Fuel, ball valve (LC)	1	1	
-29		AG31635	. . BEARING (MFD by 80657) (LC)	2	2	
-30		308410	. . BALL ASSY, Fuel, dual ball valve (LC)	1	1	
-31		3502-24-04-4802	. WASHER (MFD by 78189) (LC)	2	2	
-32		RD111-1009-6623	. BOLT	12	12	
-33		LD163-0013-0004	. WASHER	12	12	
-34		MS28775-013	. PACKING (LC)	5	5	
		302779	. NUT ASSY, Retaining, ball valve, oxidizer (LC)	1	1	
-34A		No Number	. . INSERT (MFD by 03038) (LC)	AR	AR	
-35		302780-3	. . NUT, Retaining, ball valve, oxidizer (LC)	1	1	
		303478	. SEAL ASSY, Oxidizer, dual ball valve (LC)	1	1	
-36		302788	. . SEAL, Oxidizer, ball valve (LC)	1	1	
-37		303479	. . BELLOWS ASSY, LOX, dual ball valve (Welded) (LC)	1	1	
-38		306069	. SEAL, Pressure-actuated (LC)	1	1	
-39		No Number	. HOUSING ASSY, Oxidizer, ball valve (LC)	1	1	
-40		AG31635	. . BEARING (MFD by 80657) (LC)	1	1	
-41		3502-24-04-4802	. . WASHER (MFD by 78189) (LC)	2	2	
		303915	. . HOUSING ASSY, Oxidizer, dual ball valve (LC)	1		
		306867	. . HOUSING ASSY, Oxidizer, dual ball valve (LC)		1	
-41A		1191-4CNVX375	. . . INSERT (MFD by 91767) (LC)	3		
-41A		1191-4CNV0375	. . . INSERT (MFD by 91767) (LC)		3	
-41B		1191-5CNVX625	. . . INSERT (MFD by 91767) (LC)	8		
-41B		1191-5CNV0625	. . . INSERT (MFD by 91767) (LC)		8	
-41C		1191-6CNVX562	. . . INSERT (MFD by 91767) (LC)	12		
-41C		1191-6CNV0562	. . . INSERT (MFD by 91767) (LC)		12	
-42		303915-3	. . . HOUSING, Oxidizer (LC)	1		
-42		306867-3	. . . HOUSING, Oxidizer, dual ball valve (LC)		1	
-43		RD261-3010-0074	. SEAL (LC)	1		
-43		408759	. SEAL, Pressure-actuated, cryogenic (LC)		1	
-44		303071	. BALL ASSY, Oxidizer, dual ball valve (Welded) (LC)	1	1	
-45		FA30965	. BEARING (MFD by 80657) (LC)	1	1	
-46		JD30966	. RACE (MFD by 80657) (LC)	2	2	
-47		NAS1101C3H8	. SCREW (LC)	1	1	
-48		303269	. BALL, Dual ball valve (LC)	1	1	

FIG. & INDEX NO	ZONE NO	PART NUMBER	DESCRIPTION 1 2 3 4 5 6 7	UNITS PER ASSY		USABLE ON CODE
29-49 THRU -56		DELETED				
-57		305956	. PIN, Actuator, ball valve (LC)	2	2	
-58		5100-37H	. RING (MFD by 79136) (LC)	2	2	
-59		305967	. LEVER, Actuator, ball valve (LC)	1	1	
-60		305955	. LINK, Actuator, ball valve (LC)	1	1	
-61		MS171536	. PIN (LC)	1	1	
-61A		MS171596	. PIN (LC)	1	1	
-61B		RD153-0090-0004	. WASHER (3 MAX. QTY.)(LC)	3	3	
-62		303174	. FINGER, Potentiometer actuating, ball valve (LC)	1	1	
-63		NAS1004-5H	. BOLT	8	8	
-64		RD153-5004-0004	. WASHER	8	8	
-65		303778	. END CAP, Actuator cylinder, gas generator, ball valve (LC)	1	1	
-66		MS29513-218	. PACKING (LC)	2	2	
-67		MS28782-23	. RETAINER (LC)	4	4	
-68		305983	. PISTON, Actuator, ball valve (LC)	1	1	
-69		MS29513-212	. PACKING (LC)	1	1	
-70		MS28782-17	. RETAINER (LC)	2	2	
-71		MS29513-212	. PACKING (LC)	1	1	
-72		NAS1101C08H6	. SCREW (LC)	2	2	
-73		LD153-0010-0006	. WASHER (LC)	2	2	
-74		302944	. BLOCK, Spacer, dual ball valve (LC)	1	1	
-75		302936	. INSERT, Lever, dual ball valve (LC)	2	2	
-76		MS29513-212	. PACKING (LC)	1	1	
-77		MS29513-212	. PACKING (LC)	1	1	
-78		MS28782-17	. RETAINER (LC)	2	2	
-79		302937	. NUT, Retaining, dual ball valve (LC)	1	1	
-80		302939	. SPACER, Dual ball valve (LC)	1	1	
-81		302940	. LIPSEAL, Dual ball valve (LC)	3	3	
-82		308499	. RING, Vent collector, ball valve (LC)	1	1	
-83		MS28775-124	. PACKING (LC)	1	1	
-84		No Number	. HOUSING ASSY, Actuator, ball valve (LC)	1	1	
-85		AG31635	. . BEARING (MFD by 80657) (LC)	1	1	
		308681	. . HOUSING ASSY, Actuator, gas generator ball valve (LC)	1		
		306868	. . HOUSING ASSY, Actuator, gas generator ball valve (LC)		1	
-85A		1191-3CNVX285	. . . INSERT (MFD by 91767) (LC)	8		
-85A		1191-3CNV0285	. . . INSERT (MFD by 91767) (LC)		8	
-85B		1191-4CNVX500	. . . INSERT (MFD by 91767) (LC)	10		
-85B		1191-4CNV0500	. . . INSERT (MFD by 91767) (LC)		10	
-85C		1185-2CNVX246	. . . INSERT (MFD by 91767) (LC)	2		
-85C		1185-2CNV0246	. . . INSERT (MFD by 91767) (LC)		2	
-85D		1191-4CNVX375	. . . INSERT (MFD by 91767) (LC)	8		
-85D		1191-4CNV0375	. . . INSERT (MFD by 91767) (LC)		8	
		308681-7	. . . PLUG, Actuator housing (LC)	3		
		306868-7	. . . PLUG, Actuator housing (LC)		3	
-86		308681-3	. . . HOUSING, Actuator, gas generator ball valve (LC)	1		
-86		306868-3	. . . HOUSING, Actuator, gas generator ball valve (LC)		1	
-87		AN814-4JL	. PLUG AND BLEEDER (Supersedes AN814-4CL) (LC)		1	
-88		RE261-3004-0004	. SEAL (Interchangeable with 12100C1t4 MFD by 08199) (LC)		1	

Figure 30 deleted.

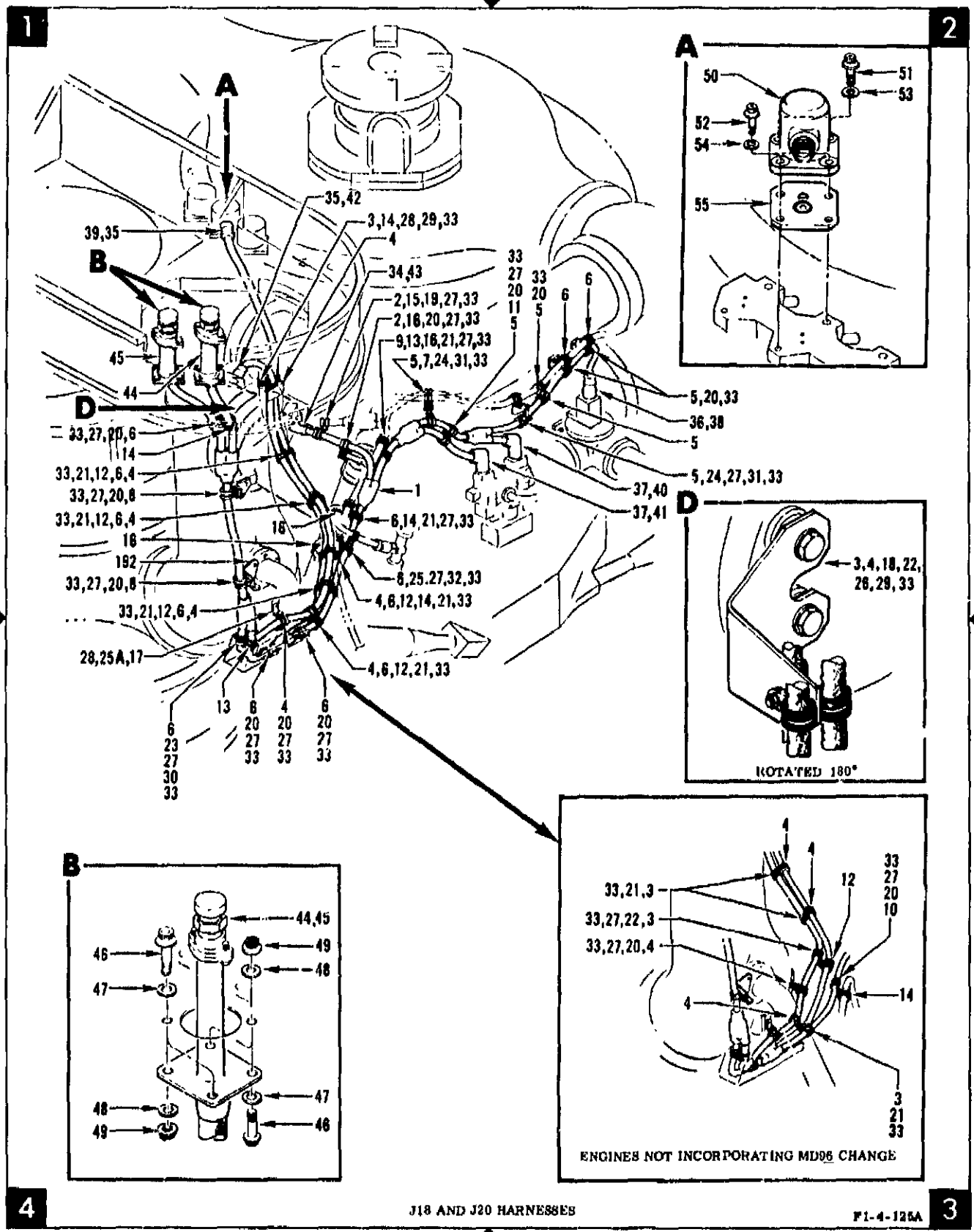

Figure 31. Electrical System Installation (Sheet 1 of 5)

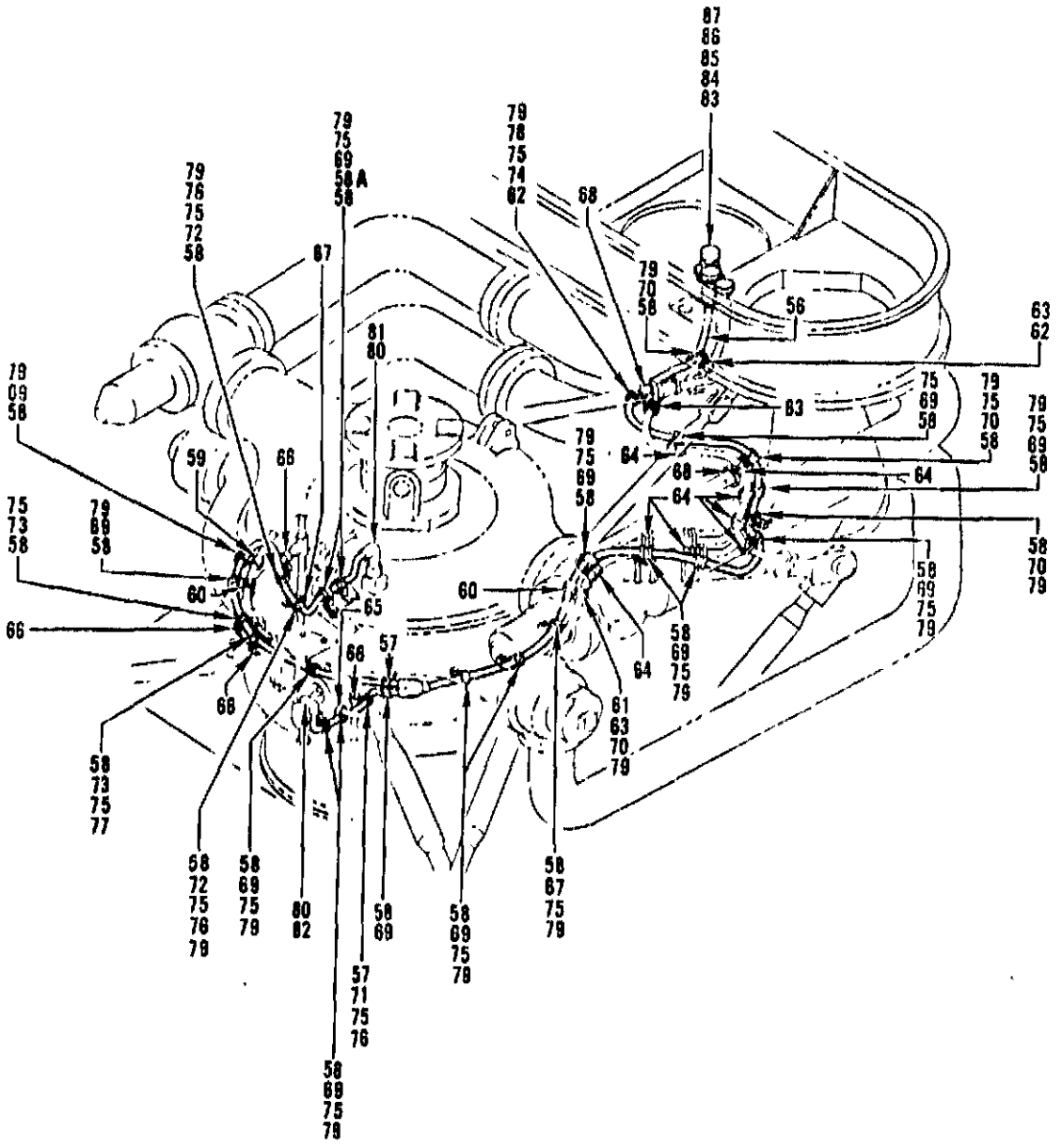

Figure 31. Electrical System Installation (Sheet 2 of 5)

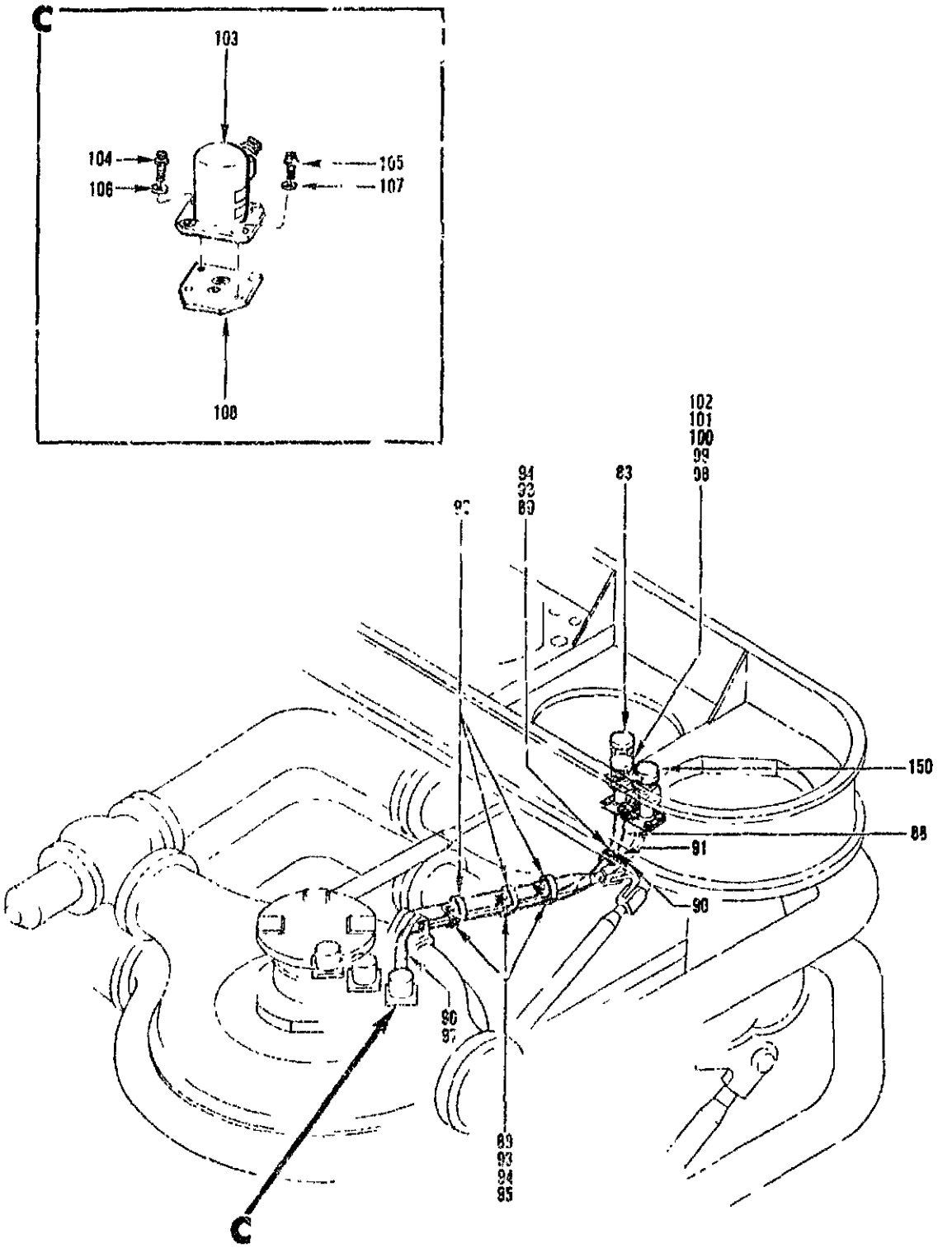

Figure 31. Electrical System Installation (Sheet 3 of 5)

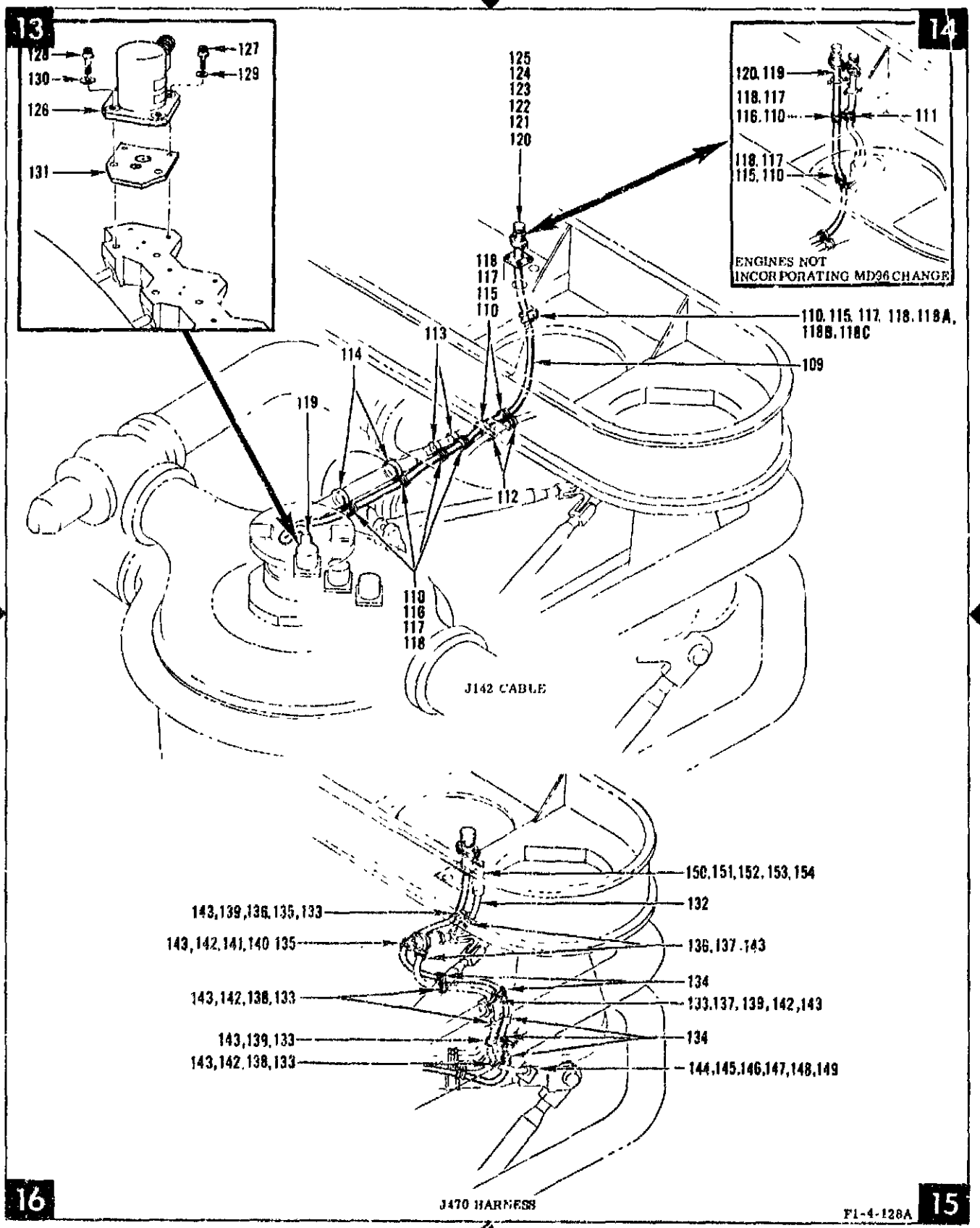

Figure 31. Electrical System Installation (Sheet 4 of 5)

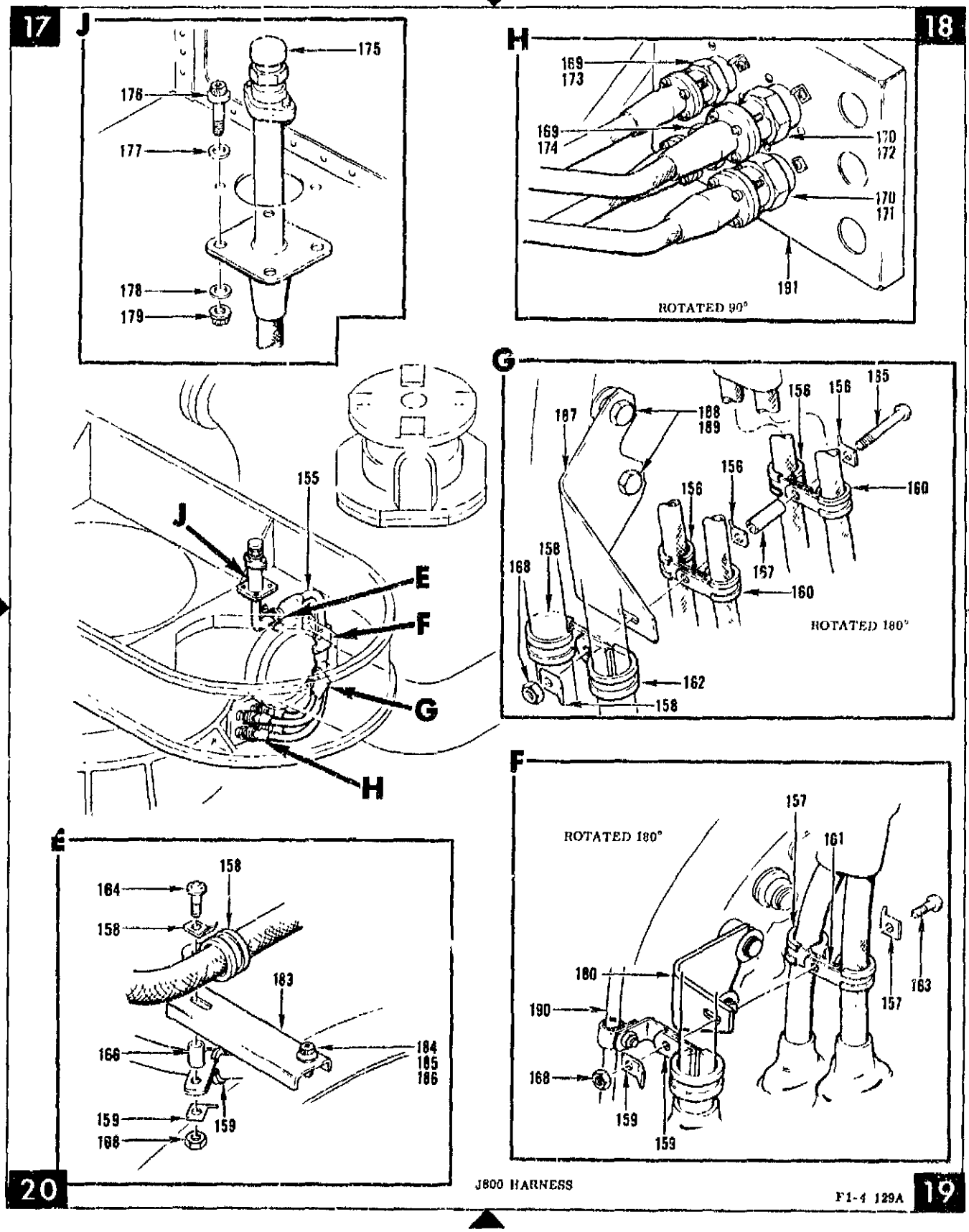

Figure 31. Electrical System Installation (Sheet 5 of 5)

FIG. & INDEX NO	ZONE NO	PART NUMBER	DESCRIPTION 1 2 3 4 5 6 7	UNITS PER ASSY	USABLE ON CODE
31-		502001	ELECTRICAL SYSTEM INSTL (See figure 1, index 5, for REQMT)	REF	
- 1	1	502044	. HARNESS ASSY, Armored, flexible inboard (J18 and J20 harness)	1	
			THE FOLLOWING HARDWARE IS REQUIRED FOR INSTALLATION OF THE WIRING HARNESS LISTED ABOVE. THESE ITEMS ARE COMPONENTS OF THE ELECTRICAL SYSTEM INSTALLATION 502001.		
- 2	1	RE127-2004-0007	. . CLAMP	2	
- 3	3	RE127-2004-0008	. . CLAMP	4	
- 4	1,3,4	RE127-2004-0009	. . CLAMP	10	
- 5	1,2	RE127-2004-0011	. . CLAMP	5	
- 6	1,2,4	RE127-2004-0012	. . CLAMP	12	
- 7	1	RE127-2004-0013	. . CLAMP	1	
- 8	1	RE127-2004-0014	. . CLAMP	1	
- 9	1	RE127-2004-0015	. . CLAMP	1	
-10	3	RE127-2004-0018	. . CLAMP	1	
-11	2	RE127-2005-0007	. . CLAMP	1	
-12	1,3,4	RE127-2005-0008	. . CLAMP	6	
-13	1	RE127-2005-0011	. . CLAMP	2	
-14	1,3	RE127-2005-0012	. . CLAMP	6	
-15	1	RE127-2005-0015	. . CLAMP	1	
-16	1	RE127-2001-0045	. . CLAMP (NHA 702561)	4	
-17	4	MS9102-04	. . BRACKET	1	
-18	3	703635	. . BRACKET, Harness support	1	
-19	1	AN520C10R8	. . SCREW	1	
-20	1 THRU 4	AN520C10R10	. . SCREW	12	
-21	1,3,4	AN520C10R12	. . SCREW	10	
-22	3	AN520C10R14	. . SCREW	2	
-23	4	AN520C10R18	. . SCREW	1	
-24	2	AN520C10R22	. . SCREW	2	
-25	1,4	AN520C10R26	. . SCREW	1	
-25A	4	RD111-4010-6408	. . BOLT	1	
-26	3	RD111-4010-6507	. . BOLT	2	
-27	1 THRU 4	LD153-0010-0007	. . WASHER	15	
-28	1,4	RD153-5002-0004	. . WASHER	1	
-29	1	RD153-5002-0006	. . WASHER	2	
-30	4	NAS43DD3-24	. . SPACER	1	
-31	2	NAS43DD3-40	. . SPACER	2	
-32	1	NAS43DD3-48	. . SPACER	1	
-33	1 THRU 4	NAS679C3W	. . NUT	27	
-34	1	19-501743-2	. . BOOT, Armored harness, flexible	1	
-35	1	19-501743-3	. . BOOT, Armored harness, flexible	2	
-36	2	19-501743-4	. . BOOT, Armored harness, flexible	1	
-37	2	19-501745-2	. BOOT, Armored harness, flexible ---*---	2	
		19-704548	. . TUBE, Heat shrinkable (Use -1, -6, and -7 as applicable)	AR	
		19-704549	. . MOLDING, Heat shrinkable (Use -2, -3, and -4 as applicable)	AR	
		19-704550	. . TUBE, Heat shrinkable (Use -2, -3 and -4 as applicable)	AR	
-38	2	502935-171	. . PLUG ASSY, Electrical, 16S-1S shell size (Altered from NA5-27556T161S) (Checkout valve) (P30)	1	
-39	1	502935-91	. . PLUG ASSY, Electrical, 14S-2S shell size (Altered from NA5-27556T142S) (NO. 1 thrust OK pressure switch) (P78)	1	
-40	2	502937-71	. . PLUG ASSY, Electrical, 12S-3S shell size (Altered from NA5-27556T123S) (Engine control valve start solenoid) (P51)	1	
-41	2	502937-41	. . PLUG ASSY, Electrical, 10SL-3S shell size (Altered from NA5-27556T103S) (Engine control valve stop solenoid) (P52)	1	
-42	1	502935-111	. . PLUG ASSY, Electrical, 14S-5S shell size (Altered from NA5-27556T145S) (Turbopump interface J75) (P75)	1	
-43	1	502935-41	. . PLUG ASSY, Electrical, 10SL-3S shell size (Altered from NA5-27556T103S) (Engine control valve stop solenoid and engine cutoff signal to vehicle J128) (P128)	1	
-44	1,4	703937-111	. . RECEPTACLE ASSY, Electrical, 36-10P shell size (Altered from NA5-27556T145S) (Interface panel) (J18)	1	
-45	1,4	703937-91	. . RECEPTACLE ASSY, Electrical, 28-12P shell size (Altered from NA5-27556T2812P) (Interface panel) (J20)	1	
-46	4	RD114-4011-6414	. . BOLT	8	
-47	4	RD153-5002-0004	. . WASHER	8	
-48	4	RD153-1002-0004	. . WASHER	8	
-49	4	RD114-8003-1004	. . NUT	8	
-50	2	308391	. SWITCH ASSY, Pressure-actuated, calibrationable (Replaces NA5-28183 per MD189) (NO. 1 thrust OK pressure switch) (J78)	1	
-51	2	RD111-4008-0408	. BOLT (AP)	2	
-52	2	RD111-4008-0606	. BOLT (AP)	2	
-53	2	RD153-5002-0004	. WASHER (AP)	2	
-54	2	RD153-5002-0006	. WASHER (AP)	2	

FIG & INDEX NO	ZONE NO.	PART NUMBER	DESCRIPTION 1 2 3 4 5 6 7	UNITS PER ASSY.	USABLE ON CODE
31-55	2	RD251-4125-XXXX	. ORIFICE PLATE (Orifice size determined by calibration test) (LC)	1	
-56	6	502948	. HARNESS ASSY, Armored, flexible (J19 harness)	1	EPB, EXB
-56	6	502948-11	. HARNESS ASSY, Armored, flexible (J19 harness)	1	FHB
			THE FOLLOWING HARDWARE IS REQUIRED FOR INSTALLATION OF THE WIRING HARNESS LISTED ABOVE. THESE ITEMS ARE COMPONENTS OF THE ELECTRICAL SYSTEM INSTALLATION 502001.		
-57	8	RE127-2004-0008	. . CLAMP	2	
-58	5 THRU 8	RE127-2004-0009	. . CLAMP	24	
-58A		MS9104-14	. . BRACKET (NHA 601601)	2	
-59	5	RE127-2004-0010	. . CLAMP	1	
-60	8	RE127-2004-0012	. . CLAMP	2	
-61	7	RE127-2004-0014	. . CLAMP	1	
-62	5,6	RE127-2004-0015	. . CLAMP	2	
-63	6,7	RE127-2005-0009	. . CLAMP	3	
-64	6,7	RE127-2005-0015	. . CLAMP	8	
-65	6	RE127-2001-0006	. . CLAMP	1	
-66	5,8	RE127-2001-0008	. . CLAMP	4	
-67	5,7	RE127-2001-0010	. . CLAMP	1	
-68	6	RE127-2001-0026	. . CLAMP	3	
-69	5 THRU 8	AN520C10R10	. . SCREW	17	
-70	6,7	AN520C10R12	. . SCREW	4	
-71	8	AN520C10R14	. . SCREW	1	
-72	5,8	AN520C10R16	. . SCREW	2	
-73	8	AN520C10R17	. . SCREW (NHA 407001)	2	
-74	5	AN520C10R24	. . SCREW	1	
-75	5 THRU 8	LD153-0010-0007	. . WASHER	22	
-76	5,8	NAS43DD3-24	. . SPACER	3	
-77	8	NAS43HT3-24	. . SPACER (NHA 407001)	2	
-78	5	NAS43DD3-48	. . SPACER	1	
-79	5 THRU 8	NAS679C3W	. . NUT	27	
-80	5,8	19-501745-3	. . BOOT, Armored harness, flexible	2	
			---*---		
		19-704548	. . TUBE, Heat shrinkable (Use -2 and -3 as applicable)	AR	
		19-704549-3	. . MOLDING, Heat shrinkable	1	
		19-704550-2	. . TUBE, Heat shrinkable	1	
-81	5	502937-91	. . PLUG ASSY, Electrical, 14S-2S shell size (Altered from NA5-27556T142S) (Redundant shutdown valve) (P50	1	
-82	8	502937-91	. . PLUG ASSY, Electrical, 14S-2S shell size (Altered from NA5-27556T142S) (Hypergol cartridge-installed sw tch) (P56)	1	
-83	6,10	703937-51	. . RECEPTACLE ASSY, Electrical, 10SL-4S shell size (Altered from NA5-27555T104S) (Interface panel) (J19)	1	
-84	6	RD111-4011-5414	. . BOLT	4	
-85	6	RD153-5002-0004	. . WASHER	4	
-86	6	RD153-1002-0004	. . WASHER	4	
-87	6	RD114-8003-1004	. . NUT	4	
-88	11	502947	. CABLE ASSY, Armored, flexible, J174 to calip switch (J174 cable)	1	
			THE FOLLOWING HARDWARE IS REQUIRED FOR INSTALLATION OF THE WIRING HARNESS LISTED ABOVE. THESE ITEMS ARE COMPONENTS OF THE ELECTRICAL SYSTEM INSTALLATION 502001.		
-89	10,11	RE127-2004-0009	. . CLAMP	4	
-90	11	RE127-2004-0015	. . CLAMP	1	
-91	11	RE127-2005-0009	. . CLAMP	1	
-92	10	RE127-2001-0026	. . CLAMP	3	
-93	10,11	AN520C10R12	. . SCREW	4	
-94	10,11	LD153-0010-0007	. . WASHER	3	
-95	11	NAS679C3W	. . NUT	4	
-96	12	19-501745-3	. . BOOT, Electrical, 90 degree	1	
			---*---		
-97	12	502937-91	. . PLUG ASSY, Electrical, 14S-2S shell size (Altered from NA5-27556T142S) (NO. 3 thrust OK pressure switch) (P74)	1	
-98	10	703937-131	. . RECEPTACLE ASSY, Electrical, 14S-5P shell size (Altered from NA5-27551T145P) (Interface panel) (J174)	1	
-99	10	RD111-4011-6414	. . BOLT	4	
-100	10	RD153-5002-0004	. . WASHER	4	
-101	10	RD153-1002-0004	. . WASHER	4	
-102	10	RD114-8003-1004	. . NUT	4	
-103	9	308391	. SWITCH ASSY, Pressure-actuated, calibrationable (Replaces NA5-28183 per MD169) (NO. 3 thrust OK pressure switch) (J74)	1	
-104	9	RD111-4008-0408	. BOLT (AP)	2	
-105	9	RD111-4008-0606	. BOLT (AP)	2	
-106	9	RD153-5002-0004	. WASHER (AP)	2	
-107	9	RD153-5002-0006	. WASHER (AP)	2	

FIG & INDEX NO.	ZONE NO	PART NUMBER	DESCRIPTION 1 2 3 4 5 6 7	UNITS PER ASSY.	USABLE ON CODE
31-108	8	RD251-4125-XXXX	. ORIFICE PLATE (Orifice size determined by calibration tests)(LC)	1	
-109	14	502949	. CABLE ASSY, Armored, flexible, J142 to calip switch (J142 cable)	1	
			THE FOLLOWING HARDWARE IS REQUIRED FOR INSTALLATION OF THE WIRING HARNESS LISTED ABOVE. THESE ITEMS ARE COMPONENTS OF THE ELECTRICAL SYSTEM INSTALLATION 502001.		
-110	11,14	RE127-2004-0009	. . CLAMP	7	
-111	14	RE127-2004-0010	. . CLAMP	1	
-112	14	RE127-2005-0009	. . CLAMP	2	
-113	13	RE127-2001-0018	. . CLAMP	2	
-114	13	RE127-2001-0026	. . CLAMP	2	
-115	13,14	AN520C10R10	. . SCREW	4	
-116	13,14,16	AN520C10R12	. . SCREW	5	
-117	13,14,16	LD153-0010-0007	. . WASHER	7	
-118	13,14,16	NAS679C3W	. . NUT	8	
-118A	14	RD127-9001-1220	. . BRACKET	1	
-118B	14	RD111-4010-6409	. . BOLT	1	
-118C		RD153-5002-0004	. . WASHER	1	
-119	13	19-501745-3	. . BOOT, Electrical, 90 degree	1	
-120	14	502937-91	. . PLUG ASSY, Electrical, 14S-2S shell size (Altered from NA5-27556T142S) (NO. 2 thrust OK pressure switch) (P73)	1	
-121	14	703937-141	. . RECEPTACLE ASSY, Electrical, 14S-2P shell size (Altered from NA5-27551T142P) (Interface panel) (J142)	1	
-122	14	RD111-4011-6417	. . BOLT	3	
-123	14	RD153-5002-0004	. . WASHER	3	
-124	14	RD153-1002-0004	. . WASHER	3	
-125	14	RD114-8003-1004	. . NUT	3	
-126	13	308391	. SWITCH ASSY, Pressure-actuated, calibrationable (Replaces NA5-28183 per MD169) (NO. 2 thrust OK pressure switch) (J73)	1	
-127	13	RD111-4008-0408	. BOLT (AP)	2	
-128	13	RD111-4008-0606	. BOLT (AP)	2	
-129	13	RD153-5002-0004	. WASHER (AP)	2	
-130	13	RD153-5002-0006	. WASHER (AP)	2	
-131	13	RD251-4125-XXXX	. ORIFICE PLATE (Orifice size to be determined by calibration tests) (LC)	1	
-132	15	502942	. CABLE ASSY, Armored, flexible, igniters (J470 cable)	1	
			THE FOLLOWING HARDWARE IS REQUIRED FOR INSTALLATION OF THE WIRING HARNESS LISTED ABOVE. THESE ITEMS ARE COMPONENTS OF THE ELECTRICAL SYSTEM INSTALLATION 502001.		
-133	15,16	RE127-2004-0009	. . CLAMP	5	
-134	15	RE127-2005-0015	. . CLAMP	5	
-135	16	RE127-2005-0009	. . CLAMP	1	
-136	15,16	RE127-2004-0015	. . CLAMP	2	
-137	15	RE127-2001-0026	. . CLAMP	2	
-138	16	AN520C10R10	. . SCREW	3	
-139	15,16	AN520C10R12	. . SCREW	3	
-140	16	AN520C10R24	. . SCREW	1	
-141	16	NAS43DD3-48	. . SPACER	1	
-142	16	LD153-0010-0007	. . WASHER	6	
-143	15,16	NAS679C3W	. . NUT	7	
-144	15,16	19-501745-15	. . BOOT, Electrical, 90 degree	1	
			---*---		
		19-704548-3	. . TUBE, Heat shrinkable	1	
		19-704548-4	. . TUBE, Heat shrinkable	1	
-145	15	502938-341	. . RECEPTACLE ASSY, Electrical, 22-14S shell size (Altered from NA5-27550T22-14S) (Interconnect to igniters) (J47)	1	
-146	15	AN515C4R8	. . SCREW	4	
-147	15	LD153-0010-0002	. . WASHER	8	
-148	15	NAS679C04W	. . NUT	4	
-149	15	RD191-4002-1001	. . LUG	1	
-150	11	703937-91	. . RECEPTACLE ASSY, Electrical, 28-12P shell size (Altered from NA5-27556T142S) (Interface panel) (J470)	1	
-151	15	RD111-4011-6414	. . BOLT	4	
-152	15	RD153-5002-0004	. . WASHER	4	
-153	15	RD153-1002-0004	. . WASHER	4	
-154	15	RD114-8003-1004	. . NUT	4	
-155	17	502943	. HARNESS ASSY, Armored, J800 to heaters (J800 harness)	1	
			THE FOLLOWING HARDWARE IS REQUIRED FOR INSTALLATION OF THE WIRING HARNESS LISTED ABOVE. THESE ITEMS ARE COMPONENTS OF THE ELECTRICAL SYSTEM INSTALLATION 502001.		
-156	18	RE127-2004-0007	. . CLAMP	2	
-157	19	RE127-2004-0010	. . CLAMP	1	
-158	5 THRU 20	RE127-2004-0012	. . CLAMP	2	
-159	19,20	RE127-2004-0014	. . CLAMP (NHA 707561)	2	

FIG. & INDEX NO	ZONE NO.	PART NUMBER	DESCRIPTION 1 2 3 4 5 6 7	UNITS PER ASSY.	USABLE ON CODE
31-160	18	RE127-2005-0007	. . CLAMP	2	
-161	19	RE127-2005-0010	. . CLAMP	1	
-162	19	RE127-2005-0012	. . CLAMP	1	
-163	19	AN520C10R14	. . SCREW	1	
-164	20	AN520C10R16	. . SCREW	1	
-165	20	AN520C10R30	. . SCREW	1	
-166	20	NAS43DD3-14	. . SPACER (NHA 702561)	1	
-167	18	NAS43DD3-40	. . SPACER	1	
-168	18,20	NAS679C3W	. . NUT	3	
-169	18	19-501743-1	. . BOOT, Armored harness, flexible	2	
-170	18	19-501743-2	. . BOOT, Armored harness, flexible	2	
-171	18	502935-31	. . PLUG ASSY, Electrical, 10S-2S shell size (Altered from NA5-27556T102S) (Turbopump heater NO. 1) (P85)	1	
-172	18	502935-31	. . PLUG ASSY, Electrical, 10S-2S shell size (Altered from NA5-27556T102S) (Turbopump heater NO. 1) (P86)	1	
-173	18	502935-11	. . PLUG ASSY, Electrical, 8S-1S shell size (Altered from NA5-27556T81S) (Turbopump heater NO. 2) (P87)	1	
-174	18	502935-11	. . PLUG ASSY, Electrical, 8S-1S shell size (Altered from NA5-27556T81S) (Turbopump heater NO. 2) (P88)	1	
-175	17	703937-11	. . RECEPTACLE ASSY, Electrical, 16-1P shell size (Altered from NA5-27556T81S) (Interface panel) (J800)	1	
-176	17	RD111-4011-6414	. . BOLT	4	
-177	17	RD153-5002-0004	. . WASHER	4	
-178	17	RD153-1002-0004	. . WASHER	4	
-179	17	RD114-8003-1004	. . NUT	4	
-180	19	502979	. BRACKET, Harness, No. 2 LOX pump discharge flange (NHA 407001)	1	
-181		DELETED		2	
-182		DELETED		2	
-183	20	703633	. BRACKET, Harness support, LOX pump discharge flange	1	
-184	20	RD111-4010-6415	. BOLT	1	
-185	20	RD153-5002-0004	. WASHER	1	
-186	20	LD152-0019-0400	. SPACER	1	
-187	18	502980	. BRACKET, Harness, LOX pump discharge flange	1	
-188	18	RD111-4010-6509	. BOLT (AP)	2	
-189	18	RD153-5002-0005	. WASHER (AP)	2	
-190	19	410052	TUBE ASSY, Facility check calips switch (NHA 407001) (LC)	REF	
-191	18	460904	PANEL, Connector, lower (NHA 458800)	REF	
-192	1	703901	SUPPORT, Fuel inlet, flexible armored harness	REF	

Figure 32 deleted.

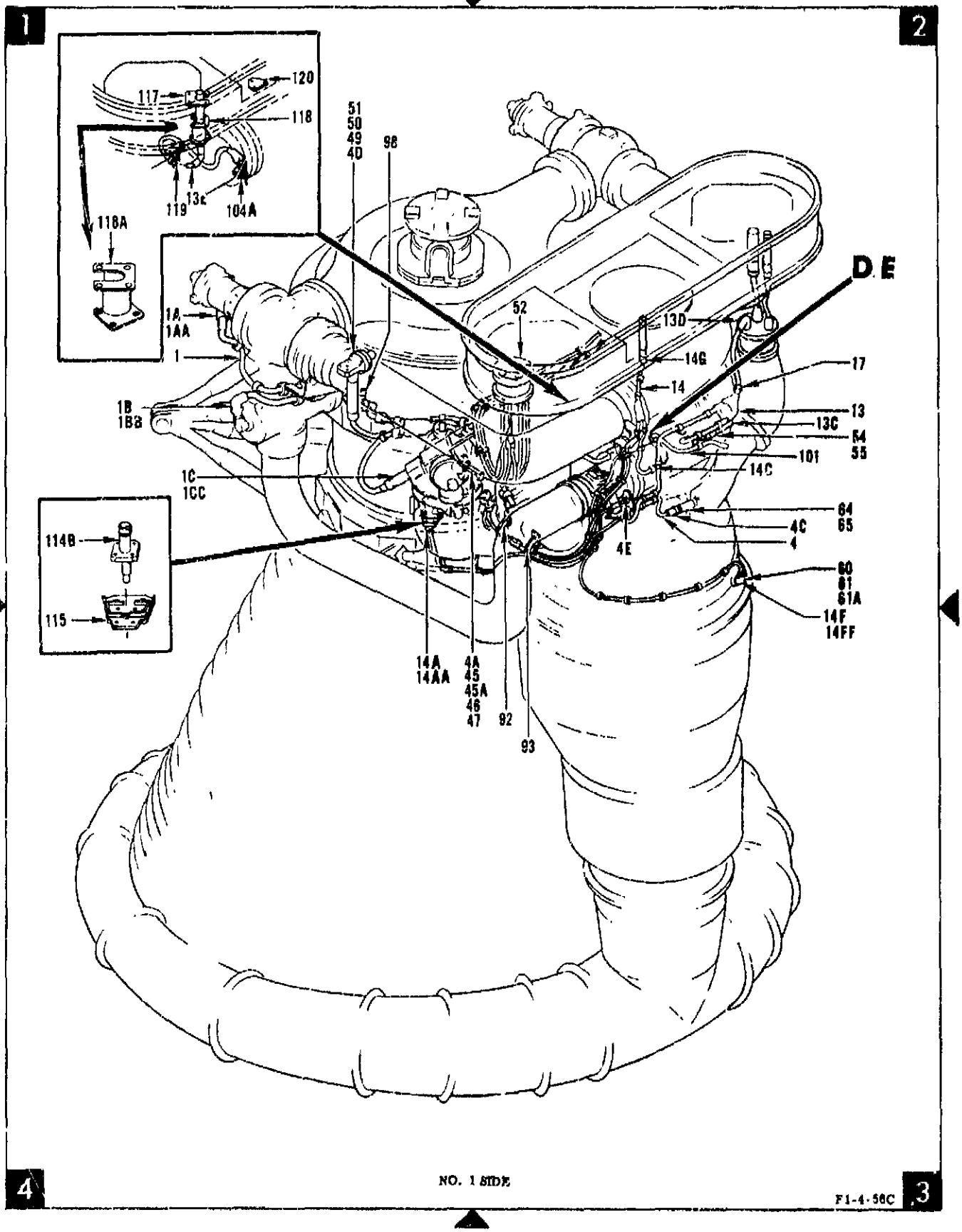

Figure 33. Flight Instrumentation Installation (Engines F-2029 Through F-2042) (Sheet 1 of 5)

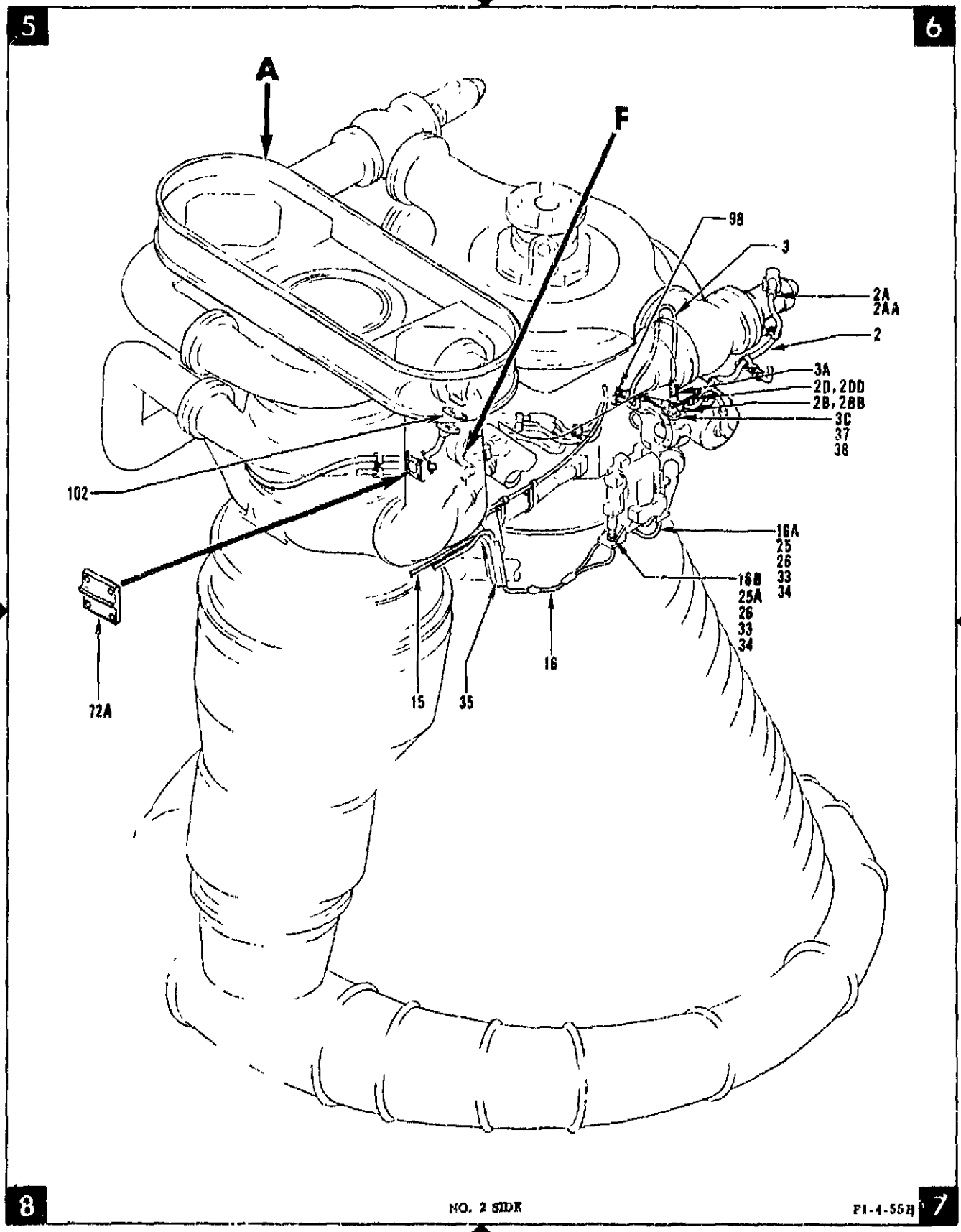

Figure 33. Flight Instrumentation Installation (Engines F-2029 Through F-2042) (Sheet 2 of 5)

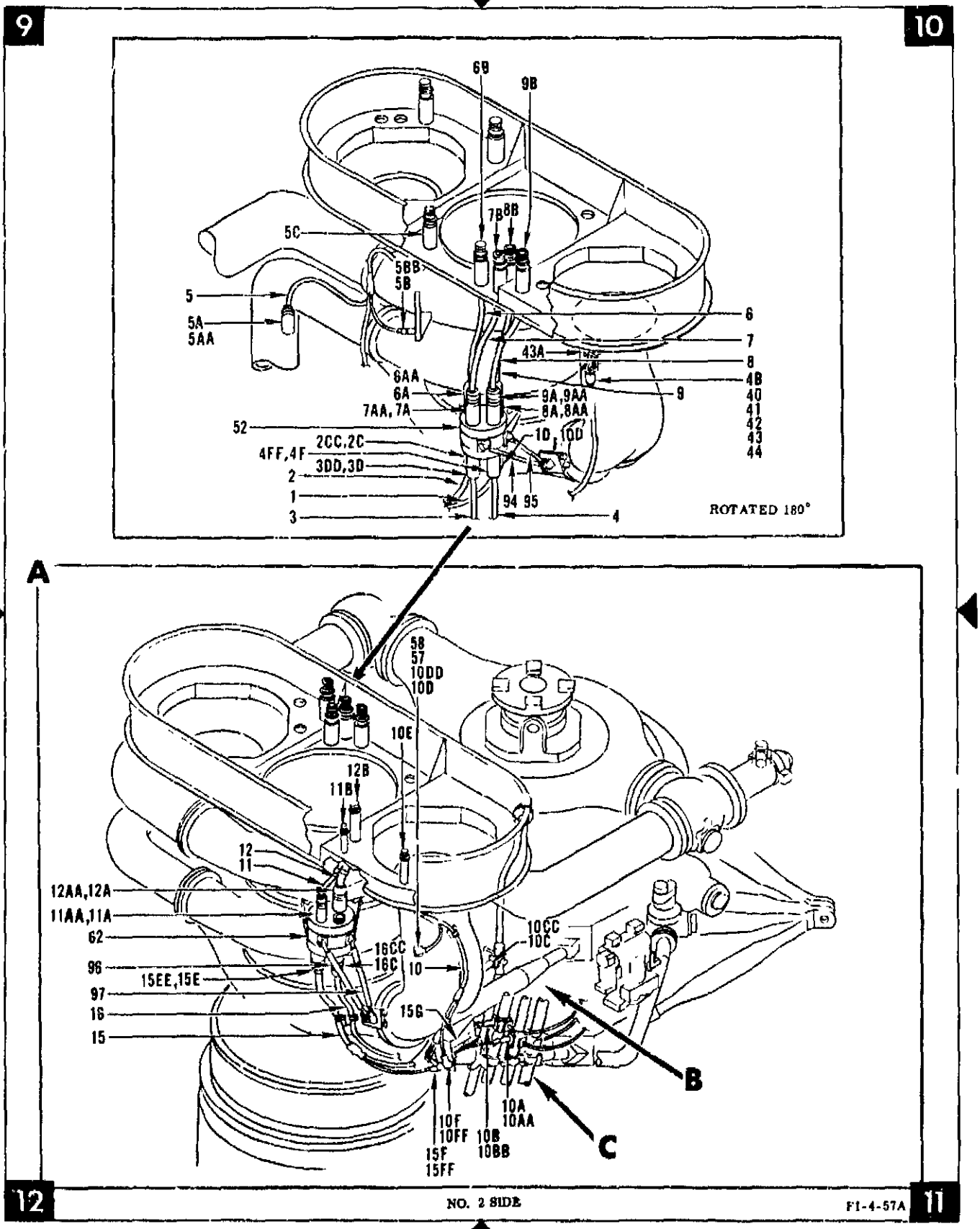

Figure 33. Flight Instrumentation Installation (Engines F-2029 Through F-2042) (Sheet 3 of 5)

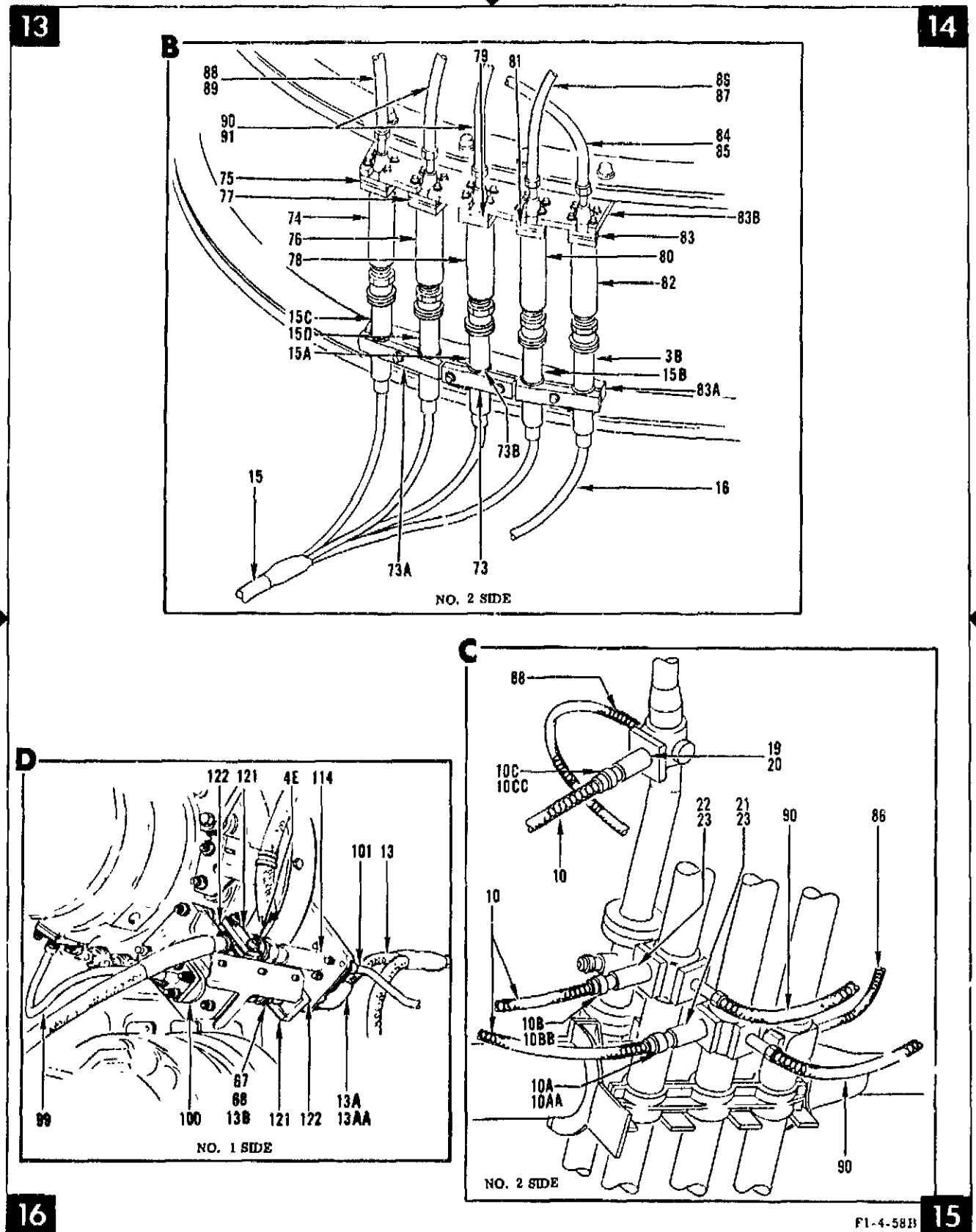

Figure 33. Flight Instrumentation Installation (Engines F-2029 Through F-2042) (Sheet 4 of 5)

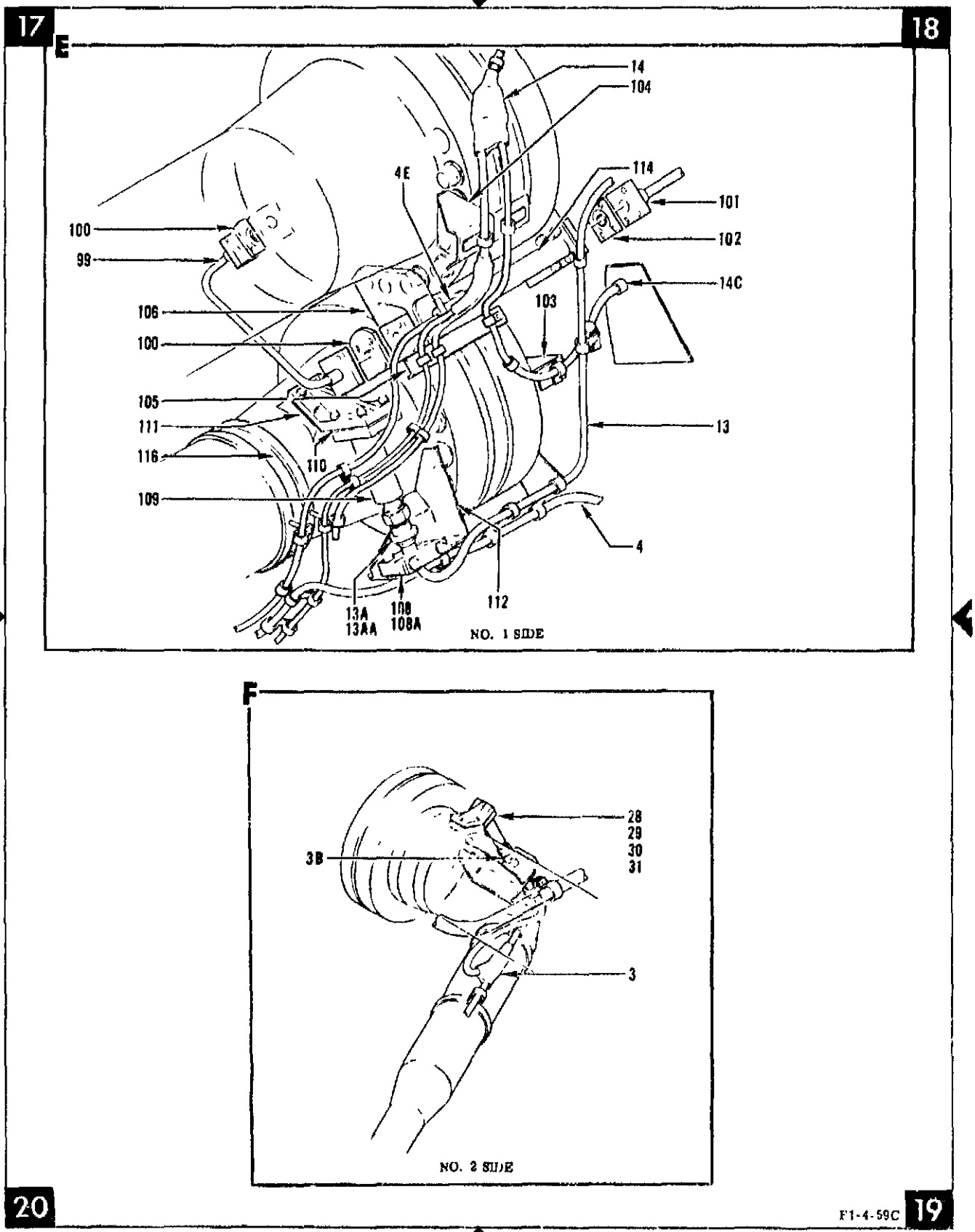

Figure 33. Flight Instrumentation Installation (Engines F-2029 Through F-2042) (Sheet 5 of 5)

FIG & INDEX NO	ZONE NO	PART NUMBER	DESCRIPTION 1 2 3 4 5 6 7	UNITS PER ASSY	USABLE ON CODE
33-		702561	FLIGHT INSTRUMENTATION INSTL (See figure 1, index 6, for REQMTS) (Flight instrumentation INSTL, engines F-2029 THRU F-2042)	REF	
- 1	1, 9	704531	. ARMORED HARNESS ASSY, Flexible, junction box P113 to engine components (P113 harness)	1	
		19-704548-2	. . TUBE, Heat shrinkable	2	
		19-704549	. . MOLDING, Heat shrinkable (Use -4, and -7, as applicable)	AR	
		19-704550-3	. . TUBE, Heat shrinkable	2	
- 1A	1	502935-171	. . PLUG ASSY, Electrical, 16S-1S shell size (Altered from NA5-27556T161S) (NO 1 Main LOX valve position indicator) (P70)	1	
- 1AA	1	19-501713-4	. . BOOT, Armored harness, flexible (NHA 702561)	1	
- 1B	1	502937-171	. . PLUG ASSY, Electrical, 16S-1S shell size (Altered from NA5-27556T161S) (NO 1 Fuel valve position indicator) (P76)	1	
- 1BB	1	19-501745-4	. . BOOT, Armored harness, flexible (NHA 702561)	1	
- 1C	1	502937-91	. . PLUG ASSY, Electrical, 14S-2S shell size (Altered from NA5-27556T142S) (Gas generator ball valve position switch) (P53)	1	
- 1CC	1	19-501745-3	. . BOOT, Armored harness, flexible (NHA 702561)	1	
- 1D	10	502935-341	. . PLUG ASSY, Electrical, 22-14P shell size (Altered from NA5-2755612214P) (Primary instrumentation junction box) (P113)	1	
- 1DD	10	19-501743-7	. . BOOT, Armored harness, flexible (NHA 702561)	1	
- 2	6, 9	704532	. ARMORED HARNESS ASSY, Flexible, P128 to primary junction box P114 (P114 harness)	1	
		19-704549	. . MOLDING, Heat shrinkage, (Use -2, -4, and -6, as applicable)	AR	
		19-704550-2	. . TUBE, Heat shrinkable	2	
- 2A	6	502935-171	. . PLUG ASSY, Electrical, 16S-1S shell size (Altered from NA5-27556T161S) (NO. 2 Main fuel valve position indicator) (P71)	1	
- 2AA	6	19-501743-4	. . BOOT, Armored harness, flexible (NHA 702361)	1	
- 2B	6	502935-171	. . PLUG ASSY, Electrical, 16S-1S shell size (Altered from NA5-27556T161S) (NO 2 Main LOX valve position indicator) (P77)	1	
- 2BB	6	19-501743-1	. . BOOT, Armored harness, flexible (NHA 702561)	1	
- 2C	9	502935-301	. PLUG ASSY, Electrical, 20-29P shell size (Altered from NA5-27556T2029P) (Primary instrumentation junction box) (P114)	1	
- 2CC	9	19-501743-6	. . BOOT, Armored harness, flexible (NHA 702561)	1	
- 2D	6	502936-41	. . RECEPTACLE ASSY, Electrical, 10SL-3P shell size (Altered from NA5-27550T10?P) (Engine cutoff signal) (J128)	1	
- 2DD	6	19-501743-12	. . BOOT, Armored harness, flexible (NHA 702561)	1	
- 3	6, 9, 13	704526	. ARMORED HARNESS ASSY, Flexible, primary junction box P112 to pressure transducers (P112 harness)	1	
		19-704548-2	. . TUBE, Heat shrinkable	3	
		19-704549-8	. . MOLDING, Heat shrinkable	1	
		19-704550-3	. . TUBE, Heat shrinkable	1	
- 3A	6	704476	. . PLUG ASSY, Electrical pressure transducer, 14S-6S shell size (Altered from NA5-27556T146S) (Fuel pump discharge NO. 2 pressure) (P120)	1	
- 3B	14	704476	. . PLUG ASSY, Electrical, pressure transducer, 14S-6S shell size (Altered from NA5-27556T146S) (Turbine outlet pressure) (P121)	1	
- 3C	6	704476	. . PLUG ASSY, Electrical, pressure transducer, 14S-6S shell size (Altered from NA5-27556T146S) (Common hydraulic return pressure) (P122)	1	
- 3D	9	502935-421	. . PLUG ASSY, Electrical, 24-28P shell size (Altered from NA5-27556T2428P) (Primary instrumentation junction box) (P112)	1	
- 3DD	9	19-501743-8	. BOOT, Armored harness, flexible (NHA 702561)	1	
- 4	2, 18	704528	. ARMORED HARNESS ASSY, Flexible, pressure transducers to primary junction box P111 (P111 harness)	1	
		19-704548-2	. . TUBE, Heat shrinkable	5	
		19-704549-?	. . MOLDING, Heat shrinkable	1	
		19 704550	. . TUBE, Heat shrinkable (Use -3, -4, and -5, as applicable)	AR	
- 4A	4	502937-601	. . PLUG ASSY, Electrical, 14S-6P shell size (Altered from NA5-27556T146S) (Gas generator chamber pressure) (P119)	1	
- 4B	10	704476	. . PLUG ASSY, Electrical, pressure transducer, 14S-6S shell size (Altered from NA5-27556T146S) (Fuel pump inlet NO. 1) (P116)	1	
- 4C	2	704476	. . PLUG ASSY, Electrical, pressure transducer, 14S-6S shell size (Altered from NA5-27556T146S) (LOX pump bearing pressure) (P118)	1	
- 4D	1	704476	. . PLUG ASSY, Electrical, pressure transducer, 14S-6S shell size (Altered from NA5-27556T146S) (Combustion chamber pressure) (P123)	1	
- 4E	2, 16, 17	704476-21	. . PLUG ASSY, Electrical, pressure transducer, 14S-6S shell size (Altered from NA5-27556T146S) (LOX pump discharge NO. 2) (P117)	1	
- 4F	9	502935-481	. . PLUG ASSY, Electrical, 28-21P shell size (Altered from NA5-27?56T2821P) (Primary instrumentation junction box) (P111)	1	
- 4FF	9	19-501743-9	. BOOT, Armored harness, flexible (NHA 702561)	1	
- 5	9	704533	. ARMORED HARNESS ASSY, Flexible, turbopump RPM and flowmeter to interface J104 (J104 harness)	1	
		19-704548-3	. . TUBE, Heat shrinkable	1	
		19-704549-3	. . MOLDING, Heat shrinkable	2	
		19-704550-3	. . TUBE, Heat shrinkable	1	

FIG & INDEX NO	ZONE NO	PART NUMBER	1 2 3 4 5 6 7 DESCRIPTION	UNITS PER ASSY	USABLE ON CODE
33- 5A	9	502935-91	. . PLUG ASSY, Electrical, 14S 2S shell size (Altered from NA5-27556T142S) (Heat exchanger LOX inlet flow NO 1) (P132)	1	
- 5AA	9	19-501743-3	. . BOOT, Armored harness, flexible (NHA 702561)	1	
- 5B	9	502935-131	. . PLUG ASSY, Electrical, 14S-6S shell size (Altered from NA5-27556T146S) (Turbopump interface) (P130)	1	
- 5BB	9	19-501743-3	. . BOOT, Armored harness, flexible (NHA 702561)	1	
- 5C	9	703937-31	. . RECEPTACLE ASSY, Electrical interface 20-27P shell size (Altered from NA5-27551T2027P) (Interface panel) (J101)	1	
- 6	10	704538	. ARMORED CABLE ASSY, Flexible, junction box to interface J100 (P108 harness)	1	
		19-704548-3	. . TUBE, Heat shrinkable	1	
		19-704549-6	. . MOLDING, Heat shrinkable	1	
- 6A	9	502935-211	. . PLUG ASSY, Electrical, 18-1S shell size (Altered from NA5-27556T181S) (Primary instrumentation junction box) (P108)	1	
- 6AA	9	19-501743-5	. . BOOT, Armored harness, flexible (NHA 702561)	1	
- 6B	9	703937-21	. . RECEPTACLE ASSY, Electrical interface 20-16P shell size (Altered from NA5-27551T2016P) (Interface panel) (J100)	1	
- 7	10	701527	. ARMORED CABLE ASSY, Flexible, primary junction box P115 to interface J103 (P115 harness)	1	
		19-704548-4	. . TUBE, Heat shrinkable	1	
		19-704549-7	. . MOLDING, Heat shrinkable	1	
- 7A	9	502935-341	. . PLUG ASSY, Electrical, 22-14P shell size (Altered from NA5-27556T2214P) (Primary instrumentation junction box) (P115)	1	
- 7AA	9	19-501743-7	. . BOOT, Armored harness, flexible (NHA 702561)	1	
- 7B	10	703937-61	. . RECEPTACLE ASSY Electrical interface, 22-14S shell size (Altered from NA5-27551T2214S) (Interface panel) (J103)	1	
- 8	10	704529	. ARMORED CABLE ASSY, Flexible, junction box P109 to interface J101 (P109 harness)	1	
		19-704548-4	. . TUBE, Heat shrinkable	2	
- 8A	10	502937-611	. . PLUG ASSY, Electrical, 28-21S shell size (Altered from NA5-27556T2821S) (Primary instrumentation junction box) (P109)	1	
- 8AA	10	19-501743-7	. . BOOT, Armored harness, flexible (NHA 702561)	1	
- 8B	10	703937-101	. . RECEPTACLE ASSY, Electrical interface, 28-21P shell size (Altered from NA5-27551T2821P) (Interface panel) (J101)	1	
- 9	10	701530	. ARMORED CABLE ASSY, Flexible, primary instrumentation junction box to interface J102 (P110 harness)	1	
		19-704548-4	. . TUBE, Heat shrinkable	1	
		19-704549-7	. . MOLDING, Heat shrinkable	1	
- 9A	10	502935-351	. . PLUG ASSY, Electrical, 22-14S shell size (Altered from NA5-27556T2214S) (Primary instrumentation junction box) (P110)	1	
- 9AA	10	19-704105-1	. . BOOT, Electrical, 60 degree (NHA 702561)	1	
- 9B	10	703937-71	. . RECEPTACLE ASSY, Electrical interface, 22-14P shell size (Altered from NA5-27551T2214P) (Interface panel) (J102)	1	
-10	12, 15	701536	. ARMORED HARNESS ASSY, Flexible, temperature transducer to interface J143 (J143 harness)	1	
		19-704548	. . TUBE, Heat shrinkable (Use -2, and -4, as applicable)	AR	
		19-704519-2	. . MOLDING, Heat shrinkable	3	
		19-704550	. . TUBE, Heat shrinkable (Use -2, -3, and -4, as applicable)	AR	
-10A	11, 15	502935-41	. . PLUG ASSY, Electrical, 10SL-3S shell size (Altered from NA5-27556T103S) (Heat exchanger helium outlet temperature) (P187)	1	
-10AA	11, 15	19-501743-2	. . BOOT, Armored harness, flexible (NHA 702561)	1	
-10B	11, 15	502935-41	. . PLUG ASSY, Electrical, 10SL-3S shell size (Altered from NA5-27556T103S) (Heat exchanger GOX outlet temperature) (P186)	1	
-10BB	11, 15	19-501743-2	. . BOOT, Armored harness, flexible (NHA 702561)	1	
-10C	11, 15	502935-41	. . PLUG ASSY, Electrical, 10SL-3S shell size (Altered from NA5-27556T103S) (Heat exchanger LOX inlet temperature) (P185)	1	
-10CC	11, 15	19-501743-2	. . BOOT, Armored harness, flexible (NHA 702561)	1	
-10D	12	502937-41	. . PLUG ASSY, Electrical, 10SL-3S shell size (Altered from NA5-27556T103S) (Fuel pump inlet NO. 2) (P184)	1	
-10DD	12	19-501745-2	. . BOOT, Electrical, 90 degree (NHA 702561)	1	
-10E	12	703937-81	. . RECEPTACLE ASSY, Electrical, 24-28P shell size (Altered from NA5-27551T2428P) (Interface panel) (J143)	1	
-10F	12	502938-101	. . RECEPTACLE ASSY, Electrical, 16S-1S shell size (Altered from NA5-27550T161S) (Spare) (Interface panel) (J188)	1	
-10FF	12	19-501745-13	. . BOOT, Electrical, 90 degree (NHA 702561)	1	
-11	12	704540	. ARMORED CABLE ASSY, Flexible, auxiliary junction box P147 to interface J140	1	
		19-704548-2	. . TUBE, Heat shrinkable	1	
		19-704549-5	. . MOLDING, Heat shrinkable	1	
-11A	12	502935-211	. . PLUG ASSY, Electrical, 18-1S shell size (Altered from NA5-27556T181S) (Auxiliary instrumentation junction box) (P147)	1	
-11AA	12	19-501743-5	. . BOOT, Armored harness, flexible (NHA 702561)	1	
-11B	12	703937	. . RECEPTACLE ASSY, Electrical interface 16S-8P shell size (Altered from NA5-27551T168P) (Interface panel) (J140)	1	

FIG & INDEX NO	ZONE NO	PART NUMBER	1 2 3 4 5 6 7 DESCRIPTION	UNITS PER ASSY	USABLE ON CODE
-13 1-	12	704541	ARMORED CABLE ASSY, Flexible, auxiliary instrumentation junction box to interface J141	1	
		19-704548-5	. TUBE, Heat shrinkable	2	
-12A	12	502937-621	. . PLUG ASSY, Electrical, 36-7S shell size (Altered from NA5-27556T367S) (Auxiliary instrumentation junction box) (P148)	1	
-12AA	12	19-701105-2	. . BOOT, Electrical, 90 degree (NHA 702561)	1	
-12B	12	703937-121	. . RECEPTACLE ASSY, Electrical interface 36-7P shell size (Altered from NA5-27551T367P) (Interface panel) (J141)	1	
-13	2, 16, 18	704535	. ARMORED HARNESS ASSY, Flexible, pressure transducers to auxiliary junction box P146	1	
		19-704548	. . TUBE, Heat shrinkable (Use -2, and -4, as applicable)	AR	
		19-704550	. . TUBE, Heat shrinkable (Use -3, and -4, as applicable)	AR	
-13A	16, 17	502937-601	. . PLUG ASSY, Electrical, 14S-6S shell size (Altered from NA5-27556T146S) (Fuel pump discharge NO 1 pressure) (P155)	1	
-13AA	16, 17	19-501745-7	. . BOOT, Electrical, 90 degree (NHA 702561)	1	
-13B	16	704476-21	. . PLUG ASSY, Electrical, pressure transducer, 14S-6S shell size (Altered from NA5-27556T146S) (LOX pump discharge NO 1 pressure) (P159)	1	
-13C	2	704476	. . PLUG ASSY, Electrical, pressure transducer, 14S-6S shell size (Altered from NA5-27556T146S) (LOX pump seal cavity pressure) (P162)	1	
-13D	2	502937-341	. . PLUG ASSY, Electrical, 22-14P shell size (Altered from NA5-27556T2214P) (Auxiliary instrumentation junction box) (RDI P149)	1	
-13E	1	703928-11	. ARMORED HARNESS ASSY, Flexible, jumper, engine environmental temperature (Field configuration for 703928 incorporating MD144 change)	NP	
-14	2, 18	704531-11	. ARMORED HARNESS ASSY, Flexible, temperature transducers to interface J106 (J106 harness)	1	
		19-704548-1	. . TUBE, Heat shrinkable (NHA 703928-11)	2	
		19-701550-2	. . TUBE, Heat shrinkable (NHA 703928-11)	1	
		19-704550-3	. . TUBE, Heat shrinkable	2	
-14A	4	502937-631	. . PLUG ASSY, Electrical, 10SL-3S shell size (Altered from NA5-27556T103S) (Engine environmental temperature) (P138)	1	
-14AA	4	19-501745-2	. . BOOT, Electrical, 90 degree (NHA 702561)	1	
-14B		DELETED			
-14C	2, 18	502935-41	. . PLUG ASSY, Electrical, 10SL-3S shell size (Altered from NA5-27556T103S) (LOX pump bearing NO. 1 temperature) (P134)	1	
-14D THRU -14EE		DELETED			
-14F	3	502937-631	. . PLUG ASSY, Electrical, 10SL-3S shell size (Altered from NA5-27556T103S) (Turbine inlet temperature) (P137)	1	
-14FF	3	19-501743-2	. . BOOT, Armored harness, flexible (NHA 702561)	1	
-14G	2	703937-41	. . RECEPTACLE ASSY, Electrical interface, 20-27P shell size (Altered from NA5-27551T2027P) (Interface panel) (J106)	1	
-15	8, 12, 13	704537	. ARMORED HARNESS ASSY, Flexible, pressure transducers to auxiliary junction box P151	1	
		19-704548	. . TUBE, Heat shrinkable (Use -2, and -3, as applicable)	AR	
		19-704549-11	. . MOLDING, Heat shrinkable	1	
		19-704550	. . TUBE, Heat shrinkable (Use -4, and -5, as applicable)	AR	
-15A	13	704476	. . PLUG ASSY, Electrical, pressure transducer, 14S-6S shell size (Altered from NA5-27556T146S) (Heat exchanger helium outlet pressure) (P163)	1	
-15B	14	704476	. . PLUG ASSY, Electrical, pressure transducer, 14S-6S shell size (Altered from NA5-27556T146S) (Heat exchanger helium inlet pressure) (P164)	1	
-15C	12	704476	. . PLUG ASSY, Electrical, pressure transducer, 14S-6S shell size (Altered from NA5-27556T146S) (Heat exchanger LOX inlet pressure) (P165)	1	
-15D	13	704476	. . PLUG ASSY, Electrical, pressure transducer, 14S-6S shell size (Altered from NA5-27556T146S) (Heat exchanger GOX outlet pressure) (P166)	1	
-15E	12	502935-581	. . PLUG ASSY, Electrical, 36-10P shell size (Altered from NA5-27556T3610P) (Auxiliary instrumentation junction box) (RDI P151)	1	
-15EE	12	19-501743-11	. . BOOT, Armored harness, flexible (NHA 702561)	1	
-15F	12	502938-281	. . RECEPTACLE ASSY, Electrical, 20-27S shell size (Spare) (Altered from NA5-27550T2027S) (J167)	1	
-15FF	12	19-501745-11	. BOOT, Electrical, 90 degree (NHA 702561)	1	
-15G	12	703916	. PANEL, NO. 2 inlet elbow	1	
		RD111-1010-6408	. BOLT (AP)	2	
		RD153-5002-0004	. WASHER (AP)	2	
-16	7, 12, 14	704539	. ARMORED HARNESS ASSY, Flexible, pressure transducers to auxiliary junction box P152	1	
		19-704548-1	. . TUBE, Heat shrinkable	2	
		19-704549-7	. . MOLDING, Heat shrinkable	1	
		19-704550-1	. . TUBE, Heat shrinkable	1	

FIG & INDEX NO	ZONE NO	PART NUMBER	DESCRIPTION 1 2 3 4 5 6 7	UNITS PER ASSY	USABLE ON CODE
33-16A	6	704476	. . PLUG ASSY, Electrical, pressure transducer, 14S-6S shell size (Altered from NA5-27556T146S) (Engine control closing pressure) (P160)	1	
-16B	6	704476	. . PLUG ASSY, Electrical, pressure transducer, 14S-6S shell size (Altered from NA5-27556T146S) (Engine control opening pressure) (P158)	1	
-16C	12	502035-341	. . PLUG ASSY, Electrical, 22-14P shell size (Altered from NA5-27556T2214P) (Auxiliary instrumentation junction box) (P172)	1	
-16CC	12	19-501743-7	. . BOOT, Armored harness, flexible (NHA 702561)	1	
-16D		DELETED			
-17	2	703904	. STRAP, Harness support	1	
		AN520C10R14	. SCREW (AP)	2	
		NAS43DD3-24	. SPACER (AP)	2	
		NAS679C3W	. NUT (AP)	2	
-18		DELETED			
-19	15	NA5-27215T3	. TRANSDUCER, Temperature resistance, for LO_2 or LH_2 service (Heat exchanger LOX inlet temperature)(Tap HO1a) (J185)	1	
		RD111-4008-0405	. BOLT (AP)	4	
		RD153-5002-0004	. WASHER (AP)	4	
-20	15	303853	. SEAL, Pressure actuated, instrumentation LOX service (LC)	1	
-21	15	NA5-27215T6	. TRANSDUCER, Temperature resistance type for LO_2 or LH_2 service (Heat exchanger helium outlet temperature) (Tap HH3b) (J187)	2	
-22	15	NA5-27215T6	. TRANSDUCER, Temperature resistance type for LO_2 or LH_2 service (Heat exchanger GOX outlet temperature) (Tap HO4b) (J186)	1	
		RD111-4008-0405	. BOLT (AP)	4	
		RD153-5002-0004	. WASHER (AP)	4	
-23	15	303861	. SEAL, Instrumentation hot gas	2	
-24		DELETED			
-25	6	NA5-27440T25	. TRANSDUCER, Absolute pressure, DC-DC type (Engine control closing pressure) (Tap NH2a) (J160)	1	
-25A	6	NA5-27440T25	. TRANSDUCER, Absolute pressure, DC-DC type (Engine control opening pressure) (Tap NH3a) (J158)	1	
		RD111-3008-0416	. BOLT (AP)	4	
		AS30	. WASHER (MFD by 10630) (AP)	4	
-26	6	19-406341	. SEAL ASSY, Plate	2	
-27		DELETED			
-28	20	NA5-27440T25	. TRANSDUCER, Absolute pressure, DC-DC type (NO. 2 fuel pump outlet pressure transducer) (Tap PF2a-2) (J120)	1	
		RD111-4011-6423	. BOLT (AP)	4	
		AS30	. WASHER (MFD by 10630) (AP)	4	
		RD153-1002-0004	. WASHER (AP)	4	
		RD114-8005-1004	. NUT (AP)	4	
-29	10	19-406341	. SEAL ASSY, Plate	2	
-30	10	703149	. ADAPTER, Transducer mount, NO. 2 fuel pump out	1	
		RD111-4008-0408	. BOLT (AP)	4	
		RD153-5002-0004	. WASHER (AP)	4	
-31	19	703632	. BRACKET ASSY, Harness support, discharge transducer, fuel pump (Welded)	1	
		RD111-4010-6507	. BOLT (AP)	3	
		RD153-5002-0005	. WASHER (AP)	3	
-32		DELETED			
-33	6, 7	703017	. BLOCK, Harness support	2	
		RD111-4011-6417	. BOLT (AP)	4	
		RD153-5002-0004	. WASHER (AP)	4	
		RD153-1002-0004	. WASHER (AP)	4	
		RD114-8003-1004	. NUT (AP)	4	
-34	6, 7	703002	. CLAMP, Harness support	2	
-35	8	703917	. CHANNEL, Harness support	1	
-36		DELETED			
-37	6	NA5-27410T5	. TRANSDUCER, Absolute pressure, DC-DC type (Common hydraulic return pressure transducer) (Tap NH5c) (J122)	1	
		RD111-4008-0408	. BOLT (AP)	4	
		AS30	. WASHER (MFD by 10360) (AP)	4	
-38	6	19-406341	. SEAL ASSY, Plate	1	
-39		DELETED			
-40	10	703024	. BRACKET, Harness support, inlet elbow, NO. 2	1	
		RD111-4010-6407	. BOLT (AP)	2	
		RD111-4010-6423	. BOLT (AP)	2	
		RD153-5002-0004	. WASHER (AP)	4	
		RD153-1002-0004	. WASHER (AP)	2	
		RD114-8005-1004	. NUT (AP)	2	
-41	10	NA5-27440T2	. TRANSDUCER, Absolute pressure, DC-DC type (NO. 1 fuel pump inlet pressure transducer) (Tap KF6a-1) (J116)	1	
		RD111-3008-0413	. BOLT (AP)	4	
		AS30	. WASHER (MFD by 10630) (AP)	4	

FIG & INDEX NO	ZONE NO.	PART NUMBER	DESCRIPTION 1 2 3 4 5 6 7	UNITS PER ASSY	USABLE ON CODE
33-42	10	19-406341	. SEAL ASSY, Plate	1	
-43		703006	. ADAPTER ASSY, Transducer mount	1	
		RD111-3008-0412	. BOLT (AP)	4	
		AS30	. WASHER (MFD by 10630) (AP)	4	
-43A	10	KNL428T5SP	. . INSERT (MFD by 29372)	4	
-44	10	RD251-4084-XXXX	. ORIFICE PLATE (NO. 1 fuel pump inlet pressure) (Orifice size determined by calibration tests)	1	
-45	4	703911	. BLOCK ASSY, Harness support	1	
		RD111-4011-6423	. BOLT (AP)	2	
		RD153-5002-0004	. WASHER (AP)	2	
		RD153-1002-0003	. WASHER (AP)	2	
		RD114-8005-1004	. NUT (AP)	2	
-45A	4	KNH428	. . INSERT (MFD by 29372)	2	
		RE127-2002-0006	. CLAMP	1	
-46	4	NA5-27440T15P	. TRANSDUCER, Absolute pressure, DC-DC type (Gas generator chamber pressure transducer) (Tap GG1d) (J119)	1	
		RD111-4009-0420	. BOLT (AP)	4	
		AS30	. WASHER (MFD by 10630) (AP)	4	
		RD153-1002-0004	. WASHER (AP)	4	
		RD114-8005-1004	. NUT (AP)	4	
-47	4	303854	. SEAL, Instrumentation, hot gas	1	
-48		DELETED			
-49	1	NA5-27440T15P	. TRANSDUCER, Absolute pressure, DC-DC type (Thrust chamber combustion chamber pressure transducer) (Tap CC1e) (J123)	1	
		RD111-4009-0419	. BOLT (AP)	4	
		AS30	. WASHER (MFD by 10630) (AP)	4	
		RD153-1002-0004	. WASHER (AP)	4	
		RD114-8003-1004	. NUT (AP)	4	
-50	1	303854	. SEAL, Instrumentation, hot gas	1	
-51	1	303855	. SEAL, Pressure-actuated, hot gas	1	
-52	2, 9	702810-21	. JUNCTION BOX ASSY Flight instrumentation, primary (Primary junction box) (J108, J109, J110, J111, J112, J113, J114, and J115)	1	
		RD111-4010-6408	. BOLT (AP)	4	
		RD153-5002-0004	. WASHER (AP)	4	
-53		DELETED			
-54	2	NA5-27412T05	. TRANSDUCER, Absolute pressure, DC-DC type (LOX seal cavity pressure) (Tap PO7a) (J162)	1	
		RD111-3008-5413	. BOLT (AP)	4	
		AS30	. WASHER (MFD by 10630) (AP)	4	
-55	2	303853	. SEAL, Pressure-actuated, instrumentation LOX service (LC)	1	
-56		DELETED			
-57	12	NA5-27215T3	. TRANSDUCER, Temperature, resistance type, for LO_2 or LH_2 service (Fuel pump inlet NO. 2 temperature) (Tap KF6a-2) (J184)	1	
		RD111-4008-0405	. BOLT (AP)	4	
		RD153-5002-0004	. WASHER (AP)	4	
-58	12	19-406341	. SEAL ASSY, Plate	1	
-59		DELETED			
-60	2	NA5-27414T2	. TRANSDUCER, Temperature, resistance type, high reliability for hot gas service (Turbine inlet manifold temperature transducer) (Tap TG4a) (J137)	1	
		RD111-4015-3412	. BOLT (AP)	1	
		RD111-4003-0412	. BOLT (AP)	3	
		RD153-5002-0004	. WASHER (AP)	4	
		RD153-1002-0004	. WASHER (AP)	4	
		H19083-4	. NUT (MFD by 96142) (AP)	4	
-61	2	303854	. SEAL, Instrumentation hot gas	1	
-61A	2	RE261-2008-0010	. GASKET	1	
-62	12	702820-31	. JUNCTION BOX ASSY, Auxiliary, pressurized (Welded) (Substitutes for 702820-21 for spares replacement) (J146, J147, J148, J151, and J152)	1	
		RD111-4010-6408	. BOLT (AP)	4	
		RD153-5002-0004	. WASHER (AP)	4	
-63		DELETED			
-64	2	NA5-27440T10	. TRANSDUCER, Absolute pressure, DC-DC type (Oxidizer pump bearing pressure transducer) (Tap LB1a) (J118)	1	
		RD111-3008-0418	. BOLT (AP)	4	
		AS30	. WASHER (MFD by 10630) (AP)	4	
-65	2	19-406341	. SEAL ASSY, Plate	1	
-66		DELETED			
-67	13	NA5-27440T20	. TRANSDUCER, Absolute pressure, DC-DC type (LOX pump discharge NO. 1 pressure) (Tap PO2a-1) (J159)	1	
		RD111-4011-6428	. BOLT (AP)	4	
		RD153-1002-0004	. WASHER (AP)	4	
		AS30	. WASHER (MFD by 10630) (AP)	4	
		RD114-8005-1004	NUT (AP)	4	
-68	16	303853	. SEAL, Pressure-actuated, instrumentation LOX service (LC)	1	
-69		DELETED			
-69A		DELETED			

FIG & INDEX NO	ZONE NO	PART NUMBER	DESCRIPTION 1 2 3 4 5 6 7	UNITS PER ASSY	USABLE ON CODE
33-70		DELETED			
-71		DELETED			
-72		DELETED			
-72A	8	407774-3	. COVER, Prefill supply	1	
		RD111-3008-0413	. BOLT (AP)	4	
		AS30	. WASHER (MFD by 10630) (AP)	4	
-72B		DELETED			
-72C		DELETED			
		19-406341	. SEAL ASSY, Plate	1	
-73	13	703022	. CLAMP, Harness support	1	
-73A	13	703136	. YOKE, Harness support, multiple transducer mount	2	
-73B	13	RE127-2003-0010	. CLAMP	5	
		RD111-4010-0417	. BOLT (AP)	4	
		RD153-5002-0004	. WASHER (AP)	4	
-74	13	NA5-27440T20	. TRANSDUCER, Absolute pressure, DC-DC type (Heat exchanger LOX inlet pressure) (Tap HO1b) (J165)	1	
		RD111-4011-6428	. BOLT (AP)	4	
		RD153-1002-0004	. WASHER (AP)	4	
		AS30	. WASHER (MFD by 10630) (AP)	4	
		RD114-8005-1004	. NUT (AP)	4	
-75	13	303853	. SEAL, Pressure actuated, instrumentation LOX service (LC)	1	
-76	13	NA5-27440T20P	. TRANSDUCER, Absolute pressure, DC-DC type (MD81 only) (Heat exchanger GOX outlet pressure) (Tap HO1a) (J166)	1	
		RD111-4011-6428	. BOLT (AP)	4	
		RD153-1002-0004	. WASHER (AP)	4	
		AS30	. WASHER (MFD by 10630) (AP)	4	
		RD114-8005-1004	. NUT (AP)	4	
-77	13	303861	. SEAL, Instrumentation hot gas	1	
-78	13	NA5-27412T5	. TRANSDUCER, Absolute pressure, DC-DC type (Heat exchanger helium outlet pressure) (Tap HH3a) (J163)	1	
		RD111-4011-6428	. BOLT (AP)	4	
		RD153-1002-0004	. WASHER (AP)	4	
		AS30	. WASHER (MFD by 10630) (AP)	4	
		RD114-8005-1004	. NUT (AP)	4	
-79	13	303861	. SEAL, Instrumentation hot gas	1	
-80	14	NA5-27412T5	. TRANSDUCER, Absolute pressure, DC-DC type (Heat exchanger helium inlet pressure) (Tap HH2a) (J164)	1	
		RD111-4011-6428	. BOLT (AP)	4	
		RD153-1002-0004	. WASHER (AP)	4	
		AS30	. WASHER (MFD by 10630) (AP)	4	
		RD114-8005-1004	. NUT (AP)	4	
-81	14	303853	. SEAL, Pressure actuated, instrumentation LOX service (LC)	1	
-82	14	NA5-27440T1P	. TRANSDUCER, Absolute pressure, DC-DC type (Turbine outlet pressure transducer) (Tap TG5c) (J121)	1	
		RD111-4011-6428	. BOLT (AP)	4	
		RD153-1002-0004	. WASHER (AP)	4	
		AS30	. WASHER (MFD by 10630) (AP)	4	
		RD114-8005-1004	. NUT (AP)	4	
-83	14	303854	. SEAL, Instrumentation hot gas	1	
-83A	14	703021	. CRADLE, Harness support, multiple transducer mount	1	
-83B	14	703009	. BRACKET, Multiple transducer mount	1	
		RD111-4009-0614	. BOLT (AP)	8	
		RD153-5002-0006	. WASHER (AP)	8	
		RD153-1002-0006	. WASHER (AP)	8	
		RD114-8005-1006	. NUT (AP)	8	
-84	14	703203-441	. HOSE ASSY, Flexible, instrumentation (LC)	1	
		RD111-4008-0409	. BOLT (AP)	4	
		RD153-5002-0004	. WASHER (AP)	4	
		RD172-0018-0100	. . TAPE (100 PSI)	AR	
		RD172-0014-0006	. . TAPE (COMBUSTION GAS)	AR	
-85	14	303854	. SEAL, Instrumentation hot gas	1	
-86	14, 15	703203-181	. HOSE ASSY, Flexible, instrumentation (Welded) (Turbine outlet pressure hose) (Tap HH2a) (LC)	1	
		RD111-4008-0409	. BOLT (AP)	4	
		RD153-5002-0004	. WASHER (AP)	4	
		RD172-0018-0500	. . TAPE (500 PSI)	AR	
		RD172-0018-2000	. . TAPE (2000 PSI)	AR	
		RD172-0014-0018	. . TAPE (HELIUM)	AR	
		RD172-0007-0001	. . TAPE (COMPRESSED GAS)	AR	
-87	14	303853	. SEAL, Pressure actuated, instrumentation LOX service (LC)	1	
-88	13, 15	703010	. TUBE ASSY, Flanged, heat exchanger LOX inlet pressure (Welded) (Tap HO1b) (LC)	1	
		RD111-4008-0409	. BOLT (AP)	4	
		RD153-5002-0004	. WASHER (AP)	4	
		RD172-0018-2000	. . TAPE (2000 PSI)	AR	

FIG & INDEX NO	ZONE NO	PART NUMBER	DESCRIPTION 1 2 3 4 5 6 7	QTY	USABLE ON CODE
J3-		RD172-0001-0001	. . TAPE (ROCKET OXIDIZER)	AR	
		RD172-0014-0027	. . TAPE (LIQUID OXYGEN)	AR	
-89	13	303853	. SEAL, Pressure actuated, instrumentation LOX service (LC)	1	
-90	13, 15	703203-261	. HOSE ASSY, Flexible, instrumentation (Welded) (Turbine outlet pressure hose) (Tap HH3a) (LC)	2	
		RD111-4008-0409	. BOLT (AP)	4	
		RD153-5002-0004	. WASHER (AP)	4	
		RD172-0018-0500	. . TAPE (500 PSI)	AR	
		RD172-0014-0018	. . TAPE (HELIUM)	AR	
		RD172-0007-0001	. . TAPE (COMPRESSED GAS)	AR	
-91	13	303861	. SEAL, Instrumentation hot gas (LC)	2	
-92	3	703901-1	. SUPPORT, Fuel inlet, flexible armored harness	1	
-93	3	703901-2	. SUPPORT, Fuel inlet, flexible armored harness	1	
		RD111-4010-6408	. BOLT (AP)	1	
		RD153-5002-0004	. WASHER (AP)	1	
-94	10	703103-7	. STRUT, Junction box support	1	
-95	10	703103-9	. STRUT, Junction box support	1	
		RD111-4011-6635	. BOLT (AP)	1	
		RD111-4011-6625	. BOLT (AP)	1	
		RD153-5002-0006	. WASHER (AP)	2	
		RD153-1002-0006	. WASHER (AP)	3	
		RE131-7001-0003	. ROD END (AP)	3	
		RE131-7002-0003	. ROD END (AP)	2	
		RD114-1005-0004	. NUT (AP)	2	
		RD114-1007-0001	. NUT (AP)	2	
		RD114-8005-1006	. NUT (AP)	2	
-96	12	703103-3	. STRUT, Junction box support	3	
-97	12	703103-5	. STRUT, Junction box support	1	
		RD111-4011-6635	. BOLT (AP)	1	
		RD111-4011-6625	. BOLT (AP)	1	
		RD153-5002-0006	. WASHER (AP)	2	
		RD153-1002-0006	. WASHER (AP)	3	
		RE131-7001-0003	. ROD END (AP)	3	
		RE131-7002-0003	. ROD END (AP)	2	
		RD114-1005-0004	. NUT (AP)	2	
		RD114-1007-0004	. NUT (AP)	2	
		RD114-8005-1006	. NUT (AP)	2	
-98	1, 6	703635	. BRACKET, Harness support, fuel system	3	
		RD111-4010-6507	. BOLT (AP)	2	
		RD153-5002-0005	. WASHER (AP)	2	
-99	16, 17	703625	. TUBE ASSY, Flanged, LOX pump outlet, NO 1 pressure (Welded) (LOX pump discharge NO 1 pressure) (Tap PO2a-1) (LC)	1	
		RD111-4010-0414	. BOLT (AP)	4	
		RD111-4011-6428	. BOLT (AP)	4	
		RD153-5002-0004	. WASHER (AP)	4	
		RD153-1002-0001	. WASHER (AP)	4	
		AS30	. WASHER (MFD by 10630) (AP)	4	
		RD114-8005-1001	. NUT (AP)	4	
		RD172-0018-2000	. . TAPE (2000 PSI)	AR	
		RD172-0001-0001	. . TAPE (ROCKET OXIDIZER)	AR	
		RD172-0014-0027	. . TAPE (LIQUID OXYGEN)	AR	
-100	16, 17	303853	. SEAL, Pressure actuated, instrumentation LOX service (LC)	2	
		RE127-2001-0004	. CLAMP	3	
		AN520C10R6	. SCREW (AP)	1	
		LD153-0010-0007	. WASHER (AP)	1	
		NAS679C3W	. NUT (AP)	1	
		RD127-9001-0824	. BRACKET	3	
		RD111-1011-0407	. BOLT (AP)	1	
		RD153-5002-0001	. WASHER (AP)	1	
-101	2, 16, 18	703626	. TUBE ASSY, Flanged, LOX pump outlet, NO. 2 pressure (Welded) (LC)	1	
		RD111-4011-6428	. BOLT (AP)	4	
		RD111-4008-0410	. BOLT (AP)	4	
		RD153-5002-0004	. WASHER (AP)	4	
		RD153-1002-0004	. WASHER (AP)	4	
		AS30	. WASHER (MFD by 10630) (AP)	4	
		RD114-8005-1004	. NUT (AP)	4	
		RD172-0018-2000	. . TAPE (2000 PSI)	AR	
		RD172-0001-0001	. . TAPE (ROCKET OXIDIZER)	AR	
		RD172-0014-0027	. . TAPE (LIQUID OXYGEN)	AR	
-102	5, 18	303853	. SEAL, Pressure actuated, instrumentation LOX service (LC)	2	
-103	18	703635	. BRACKET, Harness support, fuel system	2	
		RD111-4010-6507	. BOLT (AP)	2	
		RD153-5002-0005	. WASHER (AP)	2	
-104	18	703631	. BRACKET, Harness support, NO. 1 LOX pump out	1	
-104A	1	702749	. BRACKET, Harness support	1	
		RD111-4010-6507	. BOLT (AP)	2	
		RD111-4010-6509	. BOLT (AP)	2	
		RD153-5002-0005	. WASHER (AP)	2	

FIG & INDEX NO	ZONE NO	PART NUMBER	DESCRIPTION 1 2 3 4 5 6 7	UNITS PER ASSY	USABLE ON CODE
33-105	17	70363(	. BRACKET ASSY, Harness support, pump bearing temperature (Welded)	1	
		RD111-4011-6411	. BOLT (AP)	1	
		RD111-4011-6414	. BOLT (AP)	1	
		RD153-1002-0004	. WASHER (AP)	2	
		RD153-5002-0004	. WASHER (AP)	2	
		RD114-8005-1004	. NUT (AP)	2	
-106	17	703627	. BRACKET, Transducer mount, NO. 1 LOX pump discharge	1	
		RD111-4008-0506	. BOLT (AP)	3	
		RD153-5002-0005	. WASHER (AP)	3	
-107		DELETED			
-108	17	703911	. BLOCK ASSY, Harness support	1	
		RE127-2001-0008	. CLAMP	1	
		RD111-4011-6423	. BOLT (AP)	2	
		RD153-5002-0004	. WASHER (AP)	2	
		RD153-1002-0004	. WASHER (AP)	2	
		RD114-8003-1004	. NUT (AP)	2	
-108A	17	KNH428	. . INSERT (MFD by 20372)	2	
-109	17	NA5-27440T25	. TRANSDUCER, Absolute pressure, DC-DC type (Fuel pump discharge NO. 1) (Tap PF2a-1) (J155)	1	
		RD111-4011-6423	. BOLT (AP)	4	
		AS30	. WASHER (MFD by 10830) (AP)	4	
		RD153-1002-0004	. WASHER (AP)	4	
		RD114-8005-1004	. NUT (AP)	4	
-110	17	19-406341	. SEAL ASSY, Plate	2	
-111	17	703149	. ADAPTER, Transducer mount, NO. 2 fuel pump out	1	
		RD111-4008-6408	. BOLT (AP)	4	
		RD153-5002-0004	. WASHER (AP)	4	
-112	16	703632	. BRACKET ASSY, Harness support, discharge transducer, fuel pump (Welded)	1	
		RD111-4010-6507	. BOLT (AP)	3	
		RD153-5002-0005	. WASHER (AP)	3	
-113		DELETED			
-114	16, 18	NA5-27412T20	. TRANSDUCER, Absolute pressure, DC-DC type (NO. 2 oxidizer pump outlet pressure transducer) (Tap PL 2a-2, (J117)	1	
-114A		DELETED			
		RD111-4011-6423	. BOLT (AP)	4	
		RD153-5002-0004	. WASHER (AP)	4	
		RD153-1002-0004	. WASHER (AP)	4	
		RD114-8005-1004	. NUT (AP)	4	
-114B	1	NA5-27215T6	. TRANSDUCER, Temperature resistance, for LO2 or LH2 service (Environmental temperature transducer) (Tap CGT1) (J138)	1	
		RD111-4009-0408	. BOLT (AP)	4	
		RD153-5002-0004	. WASHER (AP)	4	
		RD153-1002-0004	. WASHER (AP)	4	
		RD191-4002-1005	. LUG (AP)	1	
		RD114-8003-1004	. NUT (AP)	4	
-115	1	703109	. BRACKET, Transducer mount, CGT1	1	
		RD111-4009-0609	. BOLT (AP)	2	
		RD153-5002-0006	. WASHER (AP)	2	
		RD153-1002-0006	. WASHER (AP)	2	
		RD114-8003-1006	. NUT (AP)	2	
-116	17	MBS60407-575-01	. CLAMP (MFD by 98625)	1	
		NAS43DD3-16	. SPACER (AP)	1	
		NAS679C3W	. NUT (AP)	1	
-117	1	702746	. COVER, Close out, J106	1	
		RD111-4011-6416	. BOLT (AP)	4	
		RD153-5002-0004	. WASHER (AP)	4	
-118	1	702747	. SPACER ASSY, Electrical connector, J106	1	
		RD111-4011-6416	. BOLT (AP)	3	
		RD153-1002-0004	. WASHER (AP)	6	
		RD153-5002-0004	. WASHER (AP)	3	
		RD114-8005-1004	. NUT (AP)	3	
-118A	1	BN372-428-2	. NUT ASSY, Blind (MFD by 73197)	4	
-119	1	410648	. BRACKET ASSY, Tee (NHA 407001)	REF	
		NAS1004-20A	. BOLT (AP)	2	
		LD153-0013-0002	. WASHER (AP)	2	
		RD153-1002-0004	. WASHER (AP)	2	
		NAS679C4W	. NUT (AP)	2	
-120	1	410647	. PLATE, Cover (NHA 407001)	REF	
		NAS1004-6A	. BOLT (AP)	3	
		LD153-0013-0002	. WASHER (AP)	3	
		RD153-1002-0004	. WASHER (AP)	3	
		NAS679C4W	. NUT (AP)	1	
-121	16	70300(	. CLAMP, Harness support	2	
		RD111-4008-3405	. BOLT (AP)	2	
		RD153-5002-0004	. WASHER (AP)	2	
-122	16	703001	. BLOCK, Harness support	1	

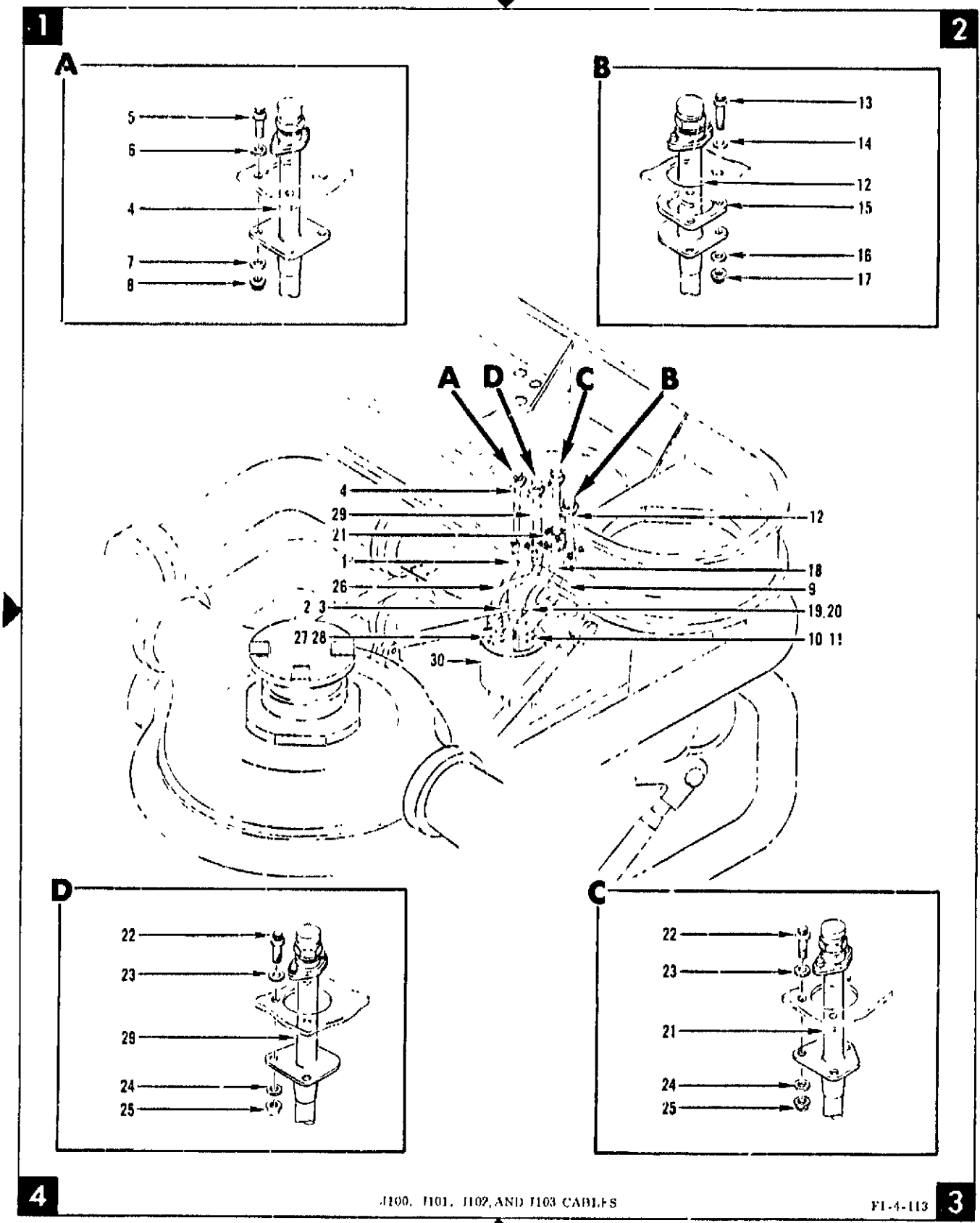

Figure 34. Flight Instrumentation Installation (Engines F-2043 Through F-2098) (Sheet 1 of 9)

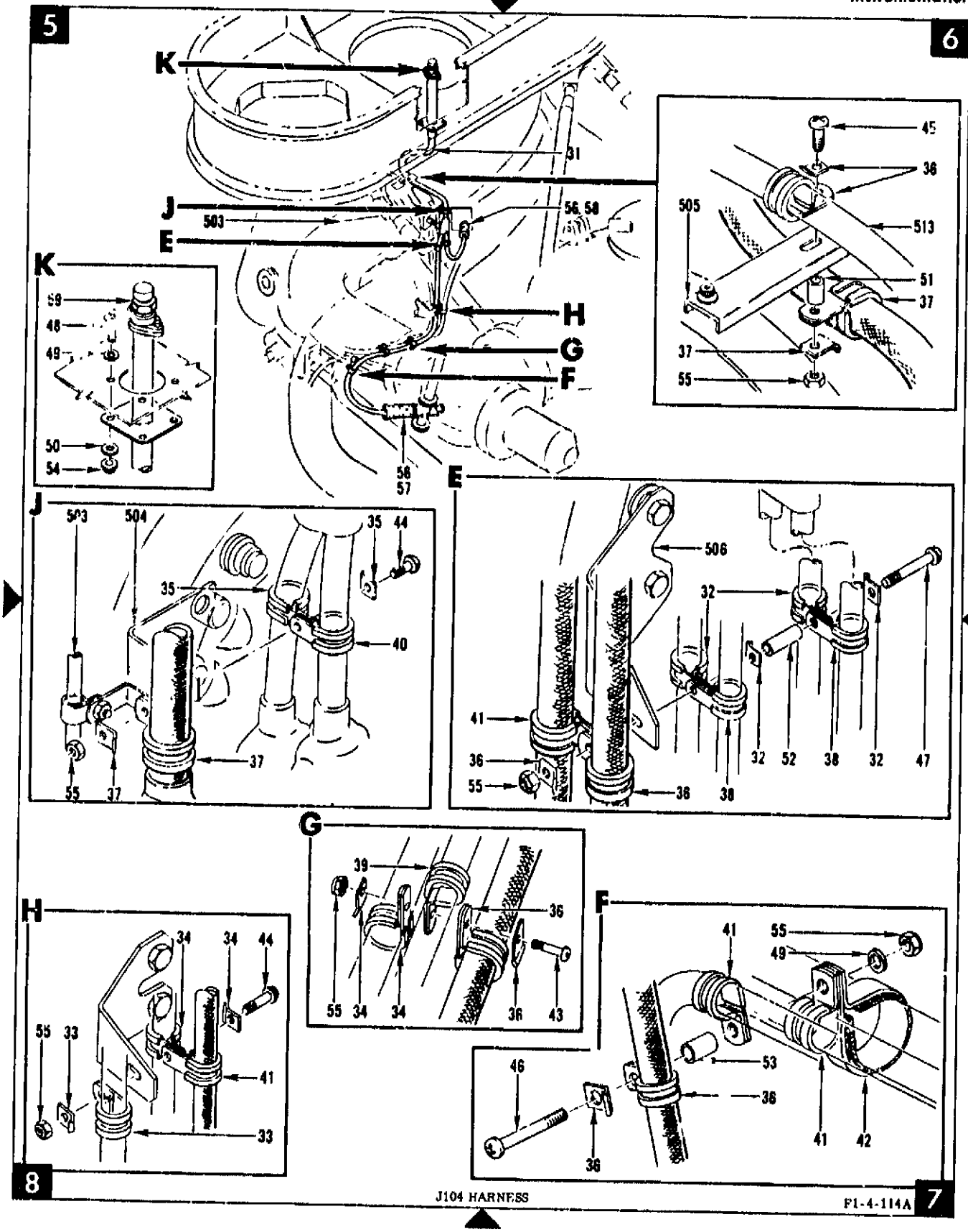

Figure 34. Flight Instrumentation Installation (Engines F-2043 Through F-2098) (Sheet 2 of 9)

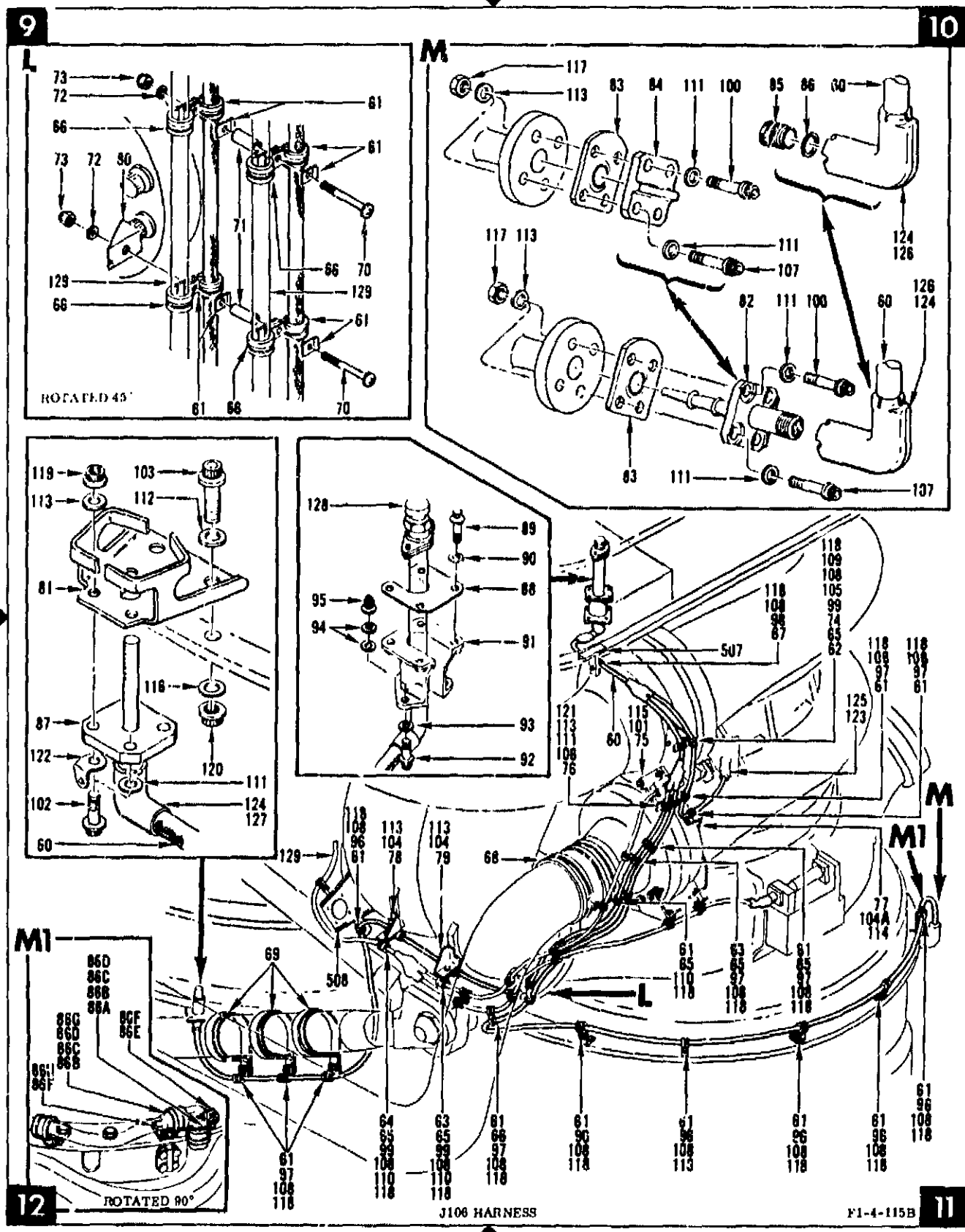

Figure 34. Flight Instrumentation Installation (Engines F-2043 Through F-2098) (Sheet 3 of 9)

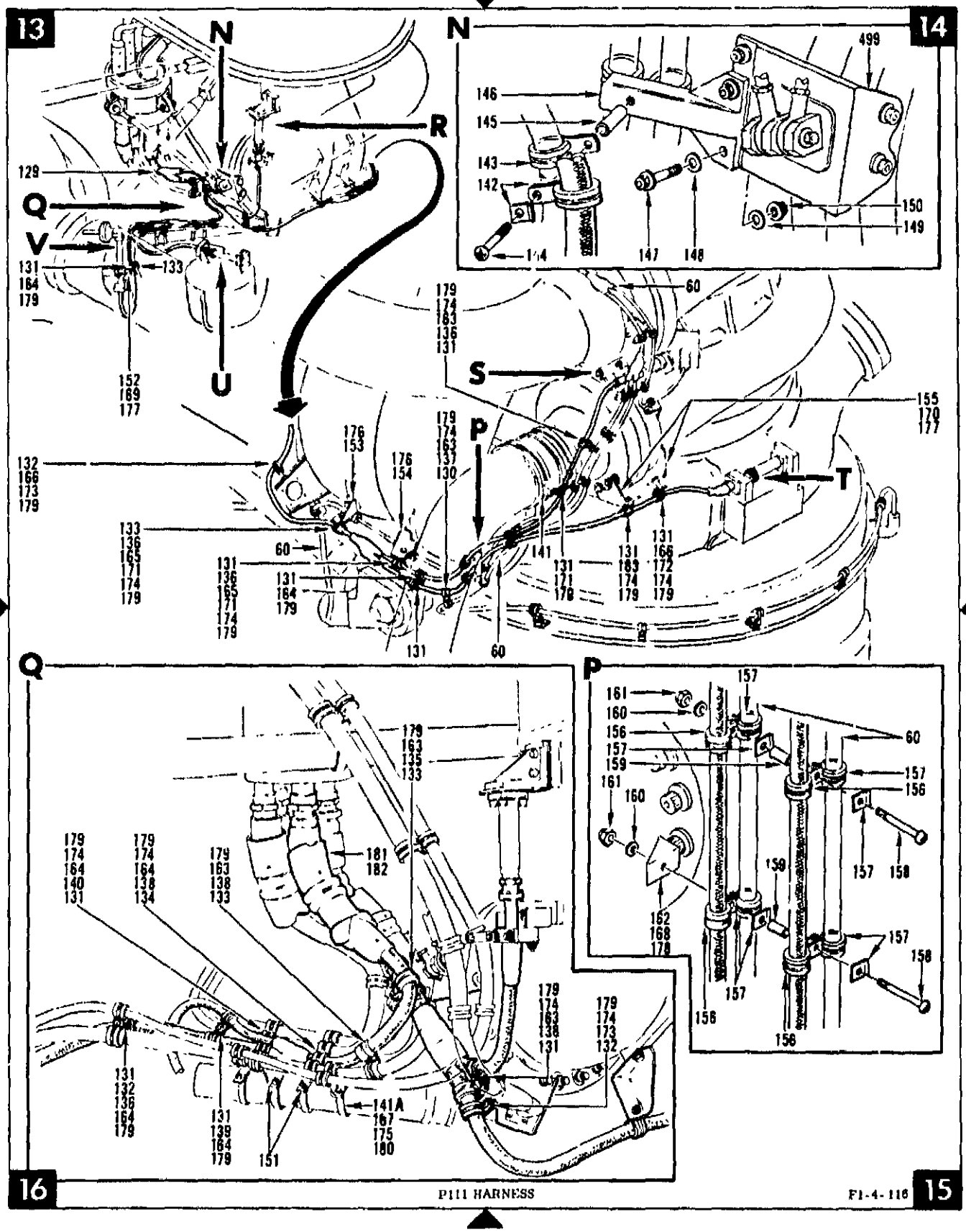

Figure 34. Flight Instrumentation Installation (Engines F-2043 Through F-2098) (Sheet 4 of 9)

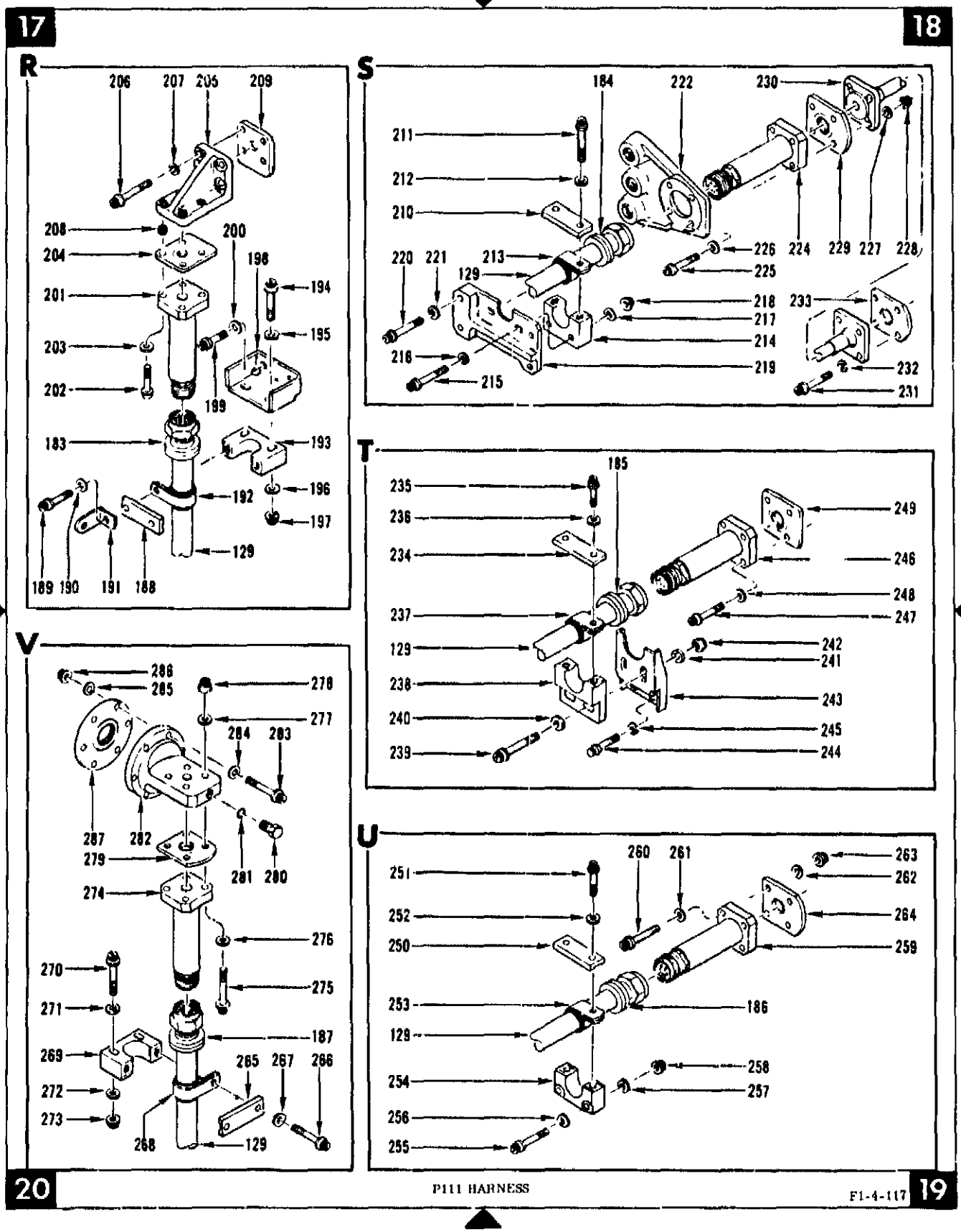

Figure 34. Flight Instrumentation Installation (Engines F-2043 Through F-2098) (Sheet 5 of 9)

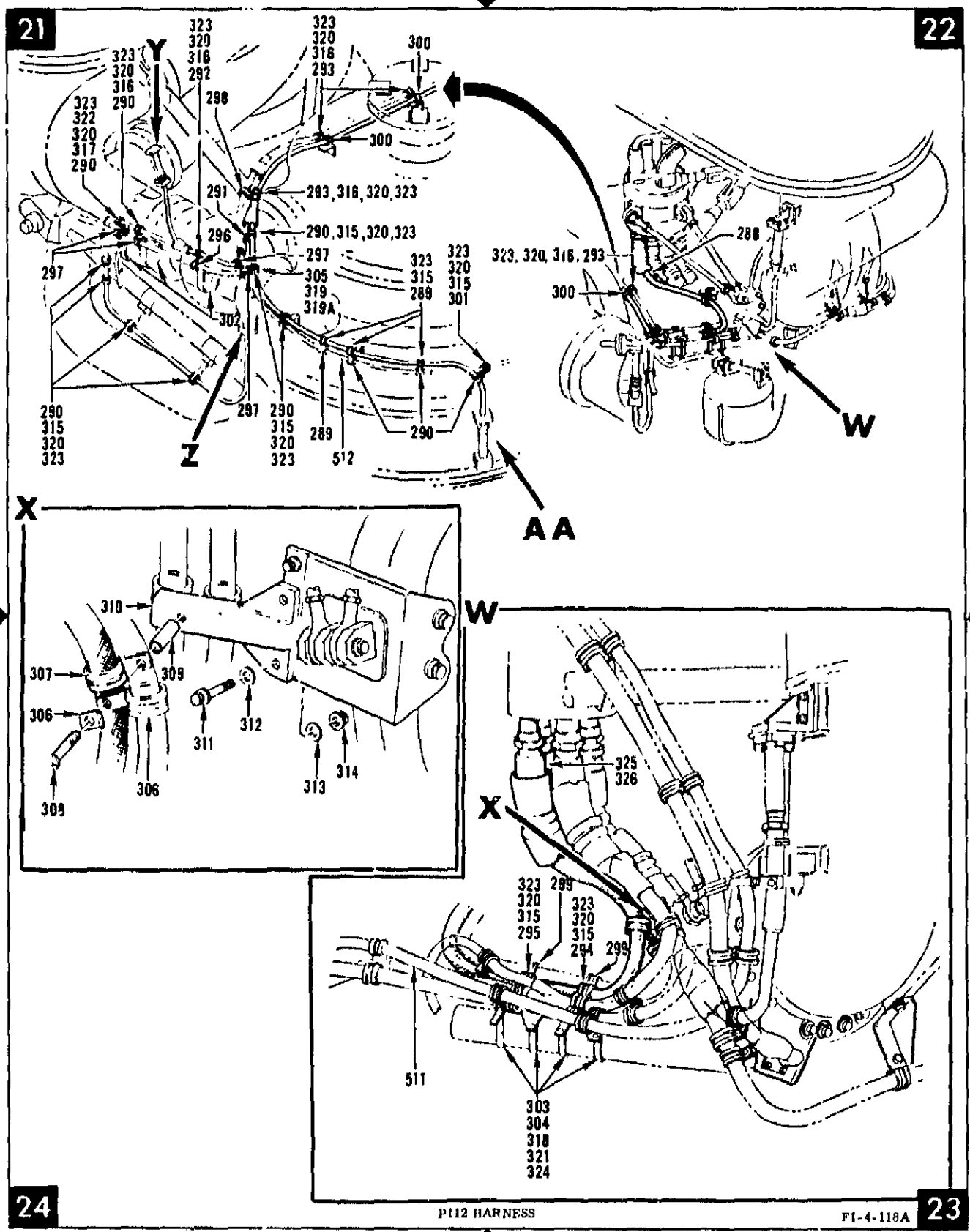

Figure 34. Flight Instrumentation Installation (Engines F-2043 Through F-2098) (Sheet 6 of 9)

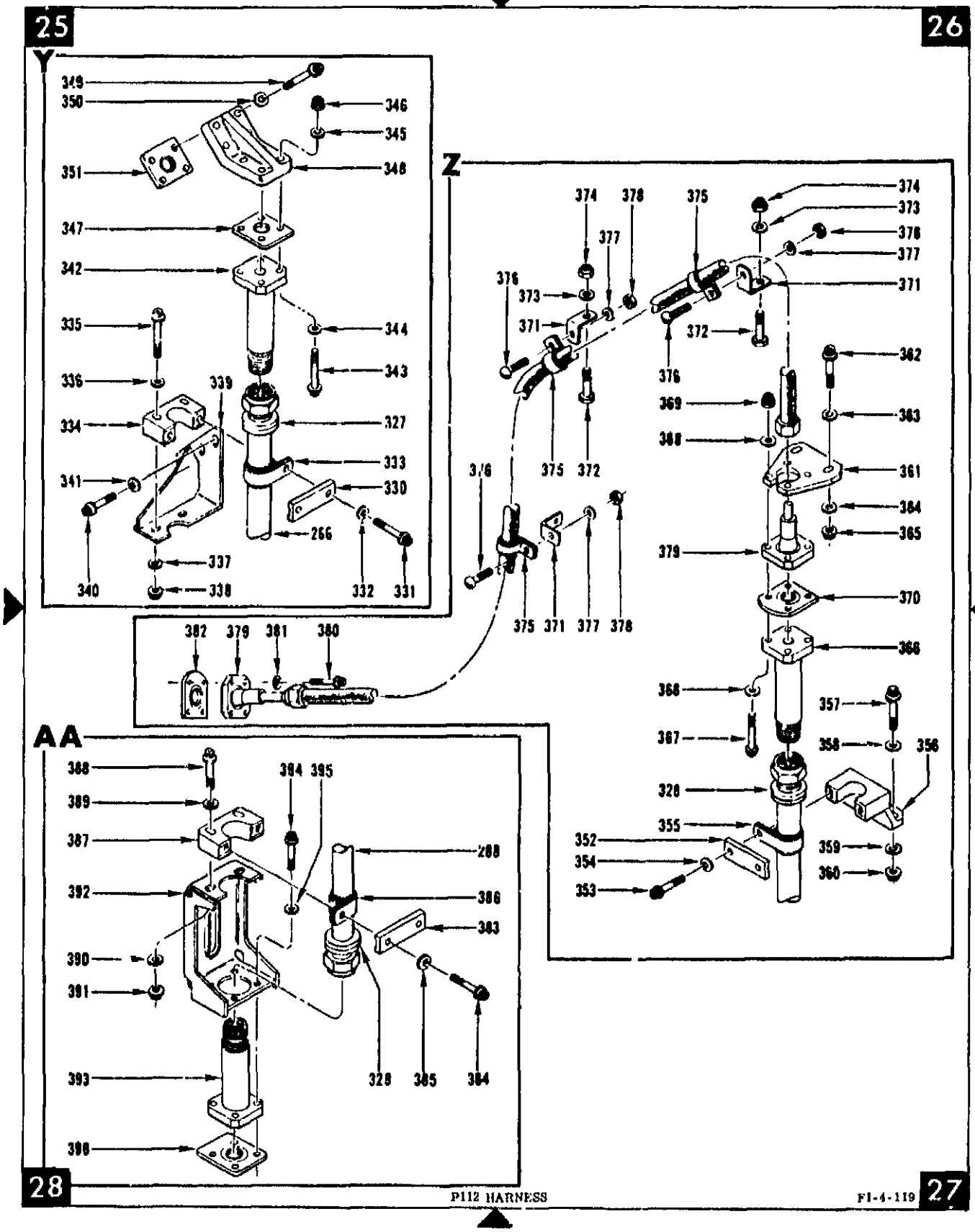

Figure 34. Flight Instrumentation Installation (Engines F-2043 Through F-2098) (Sheet 7 of 9)

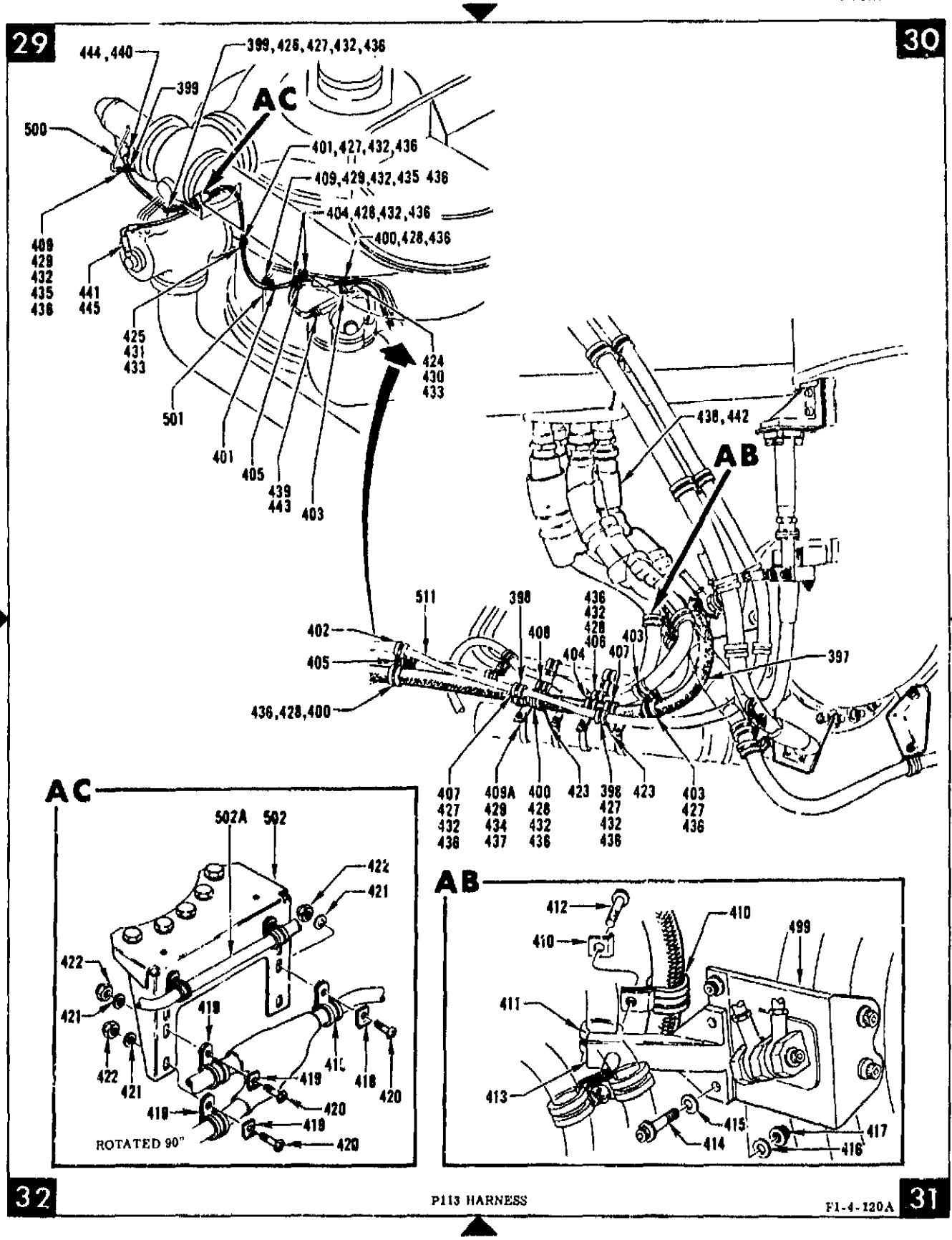

Figure 34. Flight Instrumentation Installation (Engines F-2043 Through F-2098) (Sheet 8 of 9)

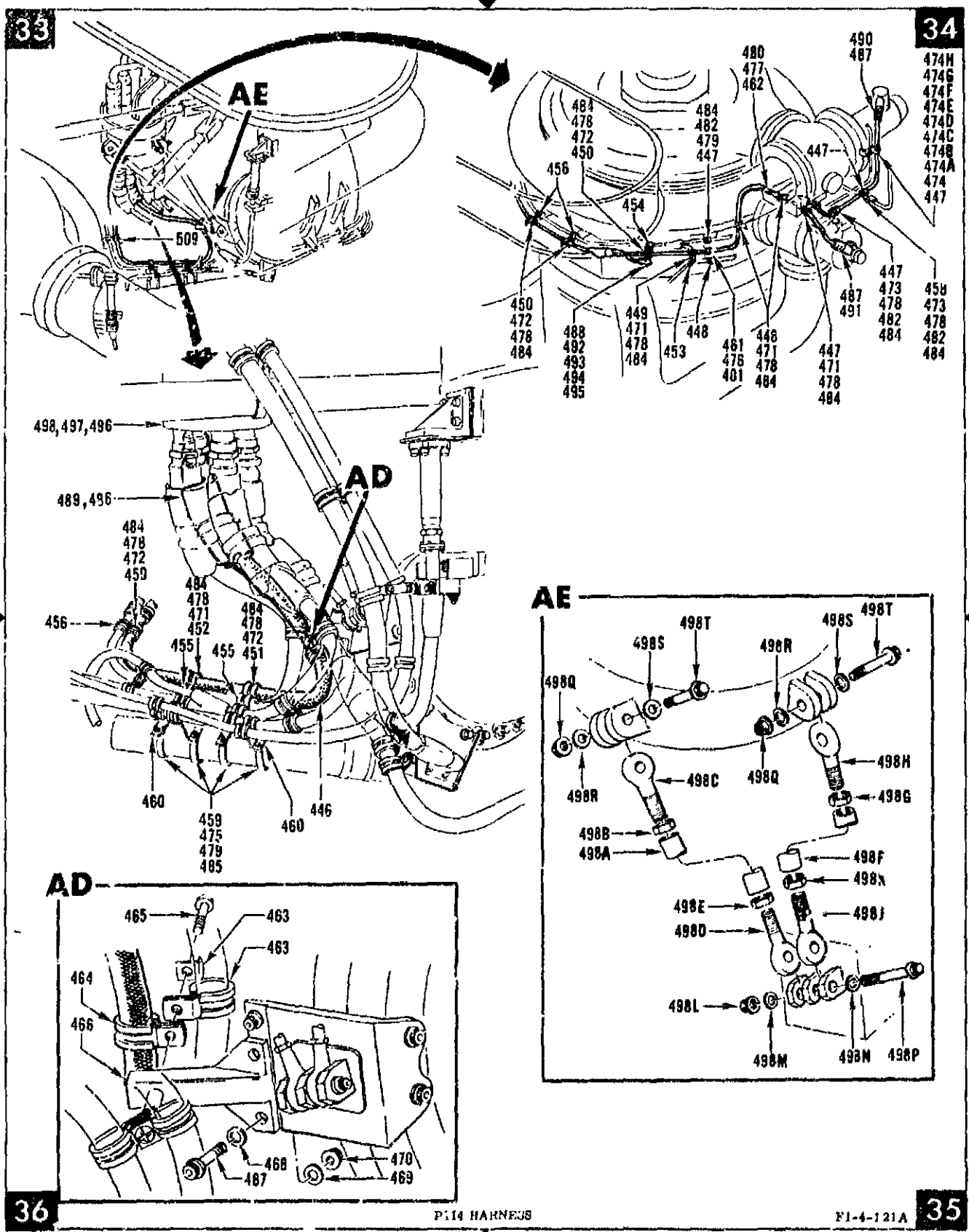

Figure 34. Flight Instrumentation Installation (Engines F-2043 Through F-2098) (Sheet 9 of 9)

FIG. & INDEX NO.	ZONE NO	PART NUMBER	DESCRIPTION 1 2 3 4 5 6 7	UNITS PER ASSY	USABLE ON CODE
34-		702561	FLIGHT INSTRUMENTATION INSTL (Engines F-2043 Through F-2098). . . . . (See figure 1, index 6, for requirements)	REF	
- 1	1	704538	. ARMORED CABLE ASSY, Flexible, junction box to interface J100 (J100 cable)	1	
		19-704548-3	. . TUBE, Heat shrinkable . .	1	
		19-704549-5	. . MOLDING, Heat shrinkable	1	
- 2	1	502935-211	. . PLUG ASSY, Electrical, 18-1S shell size (Altered from NA5-27556T18IS) . . . (Primary instrumentation junction box) (P108)	1	
- 3	1	19-501743-5	. . BOOT, Armored harness, flexible (NHA 702561)	1	
- 4	1	703937-21	. . RECEPTACLE ASSY, Electrical interface 20-16P shell size (Altered . . . . . from RD414-1011-0040) (Interface panel) (J100)	1	
- 5	1	RD111-4011-6414	. . BOLT (AP)	4	
- 6	1	RD153-1002-0004	. . WASHER (AP)	4	
- 7	1	AS30	. . WASHER (MFD by 10o30) (AP)	4	
- 8	1	RD114-8003-1004	. . NUT (AP)	4	
- 9	2	704529	. ARMORED CABLE ASSY, Flexible, junction box P109 to interface J101 . . . . . (J101 cable)	1	
		19-704548-4	. . TUBE, Heat shrinkable	2	
-10	3	502937-611	. . PLUG ASSY, Electrical, 28-21S shell size (Altered from NA5-27556T2821S). . (Primary instrumentation junction box) (P109)	1	
-11	3	19-704105-1	. . BOOT, Electrical, 60 degrees (NHA 702561)	1	
-13	2	703937-101	. . RECEPTACLE ASSY Electrical interface 28-21P shell size . . . . . (Altered from NA5-27551T2821P) (Interface panel) (J101)	1	
-13	2	RD111-4011-6423	. . BOLT (AP)	3	
-14	2	RD153-1002-0004	. . WASHER (AP)	3	
-15	2	RD152-0003-0001	. . SPACER (AP)	1	
-16	2	RD153-5002-0004	. . WASHER (AP)	3	
-17	2	RD114-8003-1004	. . NUT (AP)	3	
-18	2	704530	. ARMORED CABLE ASSY, Flexible, primary instrumentation junction box . . . . . to interface J102 (J102 cable)	1	
		19-704548-4	. . TUBE, Heat shrinkable	1	
		19-704549-7	. . TUBE, Heat shrinkable	1	
-19	2	502935-351	. . PLUG ASSY, Electrical, 22-14S shell size (Altered from . . . . . NA5-27556T2214S) (Primary instrumentation junction box) (P.10)	1	
-20	2	19-501743-7	. . BOOT, Armored harness, flexible (NHA 702561)	1	
-21	1,3	703937-71	. . RECEPTACLE ASSY, Electrical interface, 22-14P shell size . . . . . (Altered from NA5-27551T2214P) (Interface panel) (J102)	1	
-22	3,4	RD111-4011-6414	. . BOLT (AP)	3	
-23	3,4	RD153-1002-0004	. . WASHER (AP)	3	
-24	3,4	RD153-5002-0004	. . WASHER (AP)	3	
-25	3,4	RD114-8003-1001	. . NUT (AP)	3	
-26	1	704527	. ARMORED CABLE ASSY, Flexible, primary junction box P115 to . . . . . to interface J103 (J103 cable)	1	
		19-704548-4	. . TUBE, Heat shrinkable	1	
		19-704549-7	. . MOLDING, Heat shrinkable	1	
-27	4	502935-341	. . PLUG ASSY, Electrical, 22-14P shell size (Altered from . . . . . NA5-27556T2214P) (Primary instrumentation junction box) (P115)	1	
-28	4	19-501743-7	. . BOOT, Armored harness, flexible (NHA 702561)	1	
-29	1,4	703937-61	. . RECEPTACLE ASSY, Electrical interface, 22-14S shell size . . . . . (Altered from NA5-27551T2214S) (Interface panel) (J103)	1	
-30	4	702810-21	. JUNCTION BOX ASSY, Flight instrumentation, primary (Primary . . . . . junction box) (J108, J109, J110, J111, J112, J113, J114 and J115)	1	
-31	6	704533	. ARMORED HARNESS ASSY, Flexible, turbopump RPM and flowmeter . . . . . to interface J104 (J104 harness)	1	
			THE FOLLOWING HARDWARE IS REQUIRED FOR INSTALLATION OF THE WIRING HARNESS LISTED ABOVE. THESE ITEMS ARE COMPONENTS OF THE FLIGHT INSTRUMENTATION INSTALLATION 702561.		
-32	6,7	RE127-2004-0007	. . CLAMP	2	
-33	8	RE127-2004-0009	. . CLAMP	1	
-34	8	RE127-2004-0009	. . CLAMP	3	
-35	5	RE127-2004-0010	. . CLAMP	1	
-36	5 THRU 8	RE127-2004-0013	. . CLAMP	5	
-37	6,8	RE127-2004-0014	. . CLAMP	2	
-38	7	RE127-2005-0007	. . CLAMP	2	
-39	8	RE127-2005-0008	. . CLAMP	1	
-40	8	RE127-2005-0010	. . CLAMP	1	
-41	7	RE127-2005-0012	. . CLAMP	4	
-42	7	RE127-2005-0045	. . CLAMP	1	
-43	7	AN520C10R12	. . SCREW	2	
-44	5	AN520C10R14	. . SCREW	2	
-45	6	AN520C10R16	. . SCREW	1	
-46	7	AN520C10R26	. . SCREW	1	
-47	7	AN520C10R30	. . SCREW	1	
-48	5	RD111-4011-6414	. . BOLT	4	
-49	5	RD153-1002-0004	. . WASHER	4	
-50	5	RD153-5002-0004	. . WASHER	4	

FIG. & INDEX NO.	ZONE NO	PART NUMBER	DESCRIPTION 1 2 3 4 5 6 7	UNITS PER ASSY.	USABLE ON CODE
34-51	6	NAS43DD3-24	. . SPACER	1	
-52	7	NAS43DD3-40	. . SPACER	1	
-53	7	NAS43DD3-48	. . SPACER	1	
-54	5	RD114-8003-1004	. . NUT	4	
-55	5 THRU 8	NAS679C3W	. . NUT	6	
-56	5,6	19-501743-3	. . BOOT, Armored harness, flexible	2	
			---*---		
		19-704548-3	. . TUBE, Heat shrinkable	1	
		19-704549-3	. . MOLDING, Heat shrinkable	2	
		19-704550-3	. . TUBE, Heat shrinkable	1	
-57	5	502935-91	. . PLUG ASSY, Electrical, 14S-2S shell size (Altered from NA5-27556T1428) (Heat exchanger LOX inlet flow NO. 1) (Tap F16) (P132)	1	
-58	6	502935-131	. . PLUG ASSY, Electrical, 14S-6S shell size (Altered from NA5-27556T146S) (Turbopump interface - J130) (P130)	1	
-59	5	703937-31	. . RECEPTACLE ASSY, Electrical interface 20-27P shell size (Altered from NA5-27551T2027P) (Interface panel) (J104)	1	
-60	10 THRU 15	704534-11	. ARMORED HARNESS ASSY, Flexible, temperature transducers to interface J106 (J106 harness)	1	
			THE FOLLOWING HARDWARE IS REQUIRED FOR INSTALLATION OF THE WIRING HARNESS LISTED ABOVE. THESE ITEMS ARE COMPONENTS OF THE FLIGHT INSTRUMENTATION INSTALLATION 702561.		
-61	9, 11, 12	RE127-2004-0009	. . CLAMP	20	
-62	11	RE127-2004-0010	. . CLAMP	1	
-63	12	RE127-2004-0012	. . CLAMP	2	
-64	12	RE127-2004-0015	. . CLAMP	1	
-65	11, 12	RE127-2005-0009	. . CLAMP	6	
-66	9, 11	RE127-2005-0012	. . CLAMP	5	
-67	11	RE127-2008-0015	. . CLAMP	1	
-68	11	RD127-7003-0001	. . CLAMP	1	
-69	12	RE127-2001-0043	. . CLAMP	3	
-70	9	AN520C10R30	. . SCREW	2	
-71	9	NAS43DD3-64	. . SPACER	2	
-72	9	LD153-0010-0007	. . WASHER	2	
-73	9	NAS679C3W	. . NUT	2	
-74	11	702749	. . BRACKET, Harness support	1	
-75	11	704502	. . BRACKET, Harness support, NO. 2 LOX pump transducer	1	
-76	11	703630	. . BRACKET ASSY, Harness support, pump bearing temperature	1	
-77	11	703635	. . BRACKET, Harness support fuel system	1	
-78	12	703901-1	. . SUPPORT, Fuel inlet, flexible armored harness	1	
-79	12	703901-2	. . SUPPORT, Fuel inlet, flexible armored harness	1	
-80	9	703913	. . BRACKET, Harness support NO. 2 inlet flange	1	
-81	9	703109	. . BRACKET, Transducer mount, CGT1	1	
-82	10	NA5-27414T2	. . TRANSDUCER, Temperature, resistance type, high reliability for hot gas service (Turbine inlet manifold) (Tap TG4a) (J137) (Used on engines not incorporating MD176 change)	1	
-83	10	303854	. . SEAL, Instrumentation hot gas (LC)	1	
-84	10	407774-5	. . COVER, Prefill supply (Used on engines incorporating MD176 change)	1	
-85	10	RD265-6010-3002	. . CAP (Used on engines incorporating MD176 change)	1	
-86	10	RD261-2006-0010	. . GASKET (Used on engines incorporating MD176 change)	1	
-86A	12	RE127-2004-0026	. . CLAMP (Used on engines incorporating MD176 change)	1	
-86B	12	AN520C10R10	. . SCREW (Used on engines incorporating MD176 change)	2	
-86C	12	LD153-0010-0007	. . WASHER (Used on engines incorporating MD176 change)	2	
-86D	12	NAS679C3W	. . NUT (Used on engines incorporating MD176 change)	2	
-86E	12	MS9102-05	. . BRACKET (Used on engines incorporating MD176 change)	1	
-86F	12	NAS1004-10A	. . BOLT (Used on engines incorporating MD176 change)	2	
-86G	12	RE127-2004-0021	. . CLAMP (Used on engines incorporating MD176 change)	1	
-86H	12	MS9102-24	. . BRACKET (Used on engines incorporating MD176 change)	1	
-87	12	NA5-27215T6	. . TRANSDUCER, Temperature, resistance, for LO_2 or LH_2 service (Engine environmental) (Tap CGT1) (J138)	1	
-88	10	702746	. . COVER, Close out, J106	1	
-89	10	RD111-4011-6416	. . BOLT	4	
-90	10	RD153-5002-0004	. . WASHER	4	
-91	11	702747	. . SPACER ASSY, Electrical connector J106	1	
-92	11	RD111-4011-6416	. . BOLT (AP)	3	
-93	11	RD153-5002-0004	. . WASHER (AP)	3	
-94	12	RD153-1002-0004	. . WASHER (AP)	6	
-95	9	RD114-8005-1004	. . NUT (AP)	3	
-96	11	AN520C10R8	. . SCREW	6	
-97	11, 12	AN520C10R10	. . SCREW	10	
-98	11	AN520C10R12	. . SCREW	1	
-99	10, 12	AN520C10R16	. . SCREW	3	
-100	10	RD111-4003-0412	. . BOLT	7	
-101	11	RD111-4003-0506	. . BOLT	2	
-102	12	RD111 4009-0408	. . BOLT	4	
-103	9	RD111-4009-0609	. . BOLT	2	
-104	12	RD111-4010-6408	. . BOLT	2	
-104A	11	RD111-4010-6507	. . BOLT	2	
-105	11	RD111-4010-6509	. . BOLT	2	
-106	11	RD111-4011-6411	. . BOLT	2	

FIG. & INDEX NO.	ZONE NO.	PART NUMBER	DESCRIPTION 1 2 3 4 5 6 7	UNITS PER ASSY.	USABLE ON CODE
34-107	10	RD111-4015-0412	. . BOLT	4	
-108	10 THRU 12	LD153-0010-0007	. . WASHER	20	
-109	10	LD153-0010-0008	. . WASHER	1	
-110	11,12	NAS43DD3-16	. . SPACER	3	
-111	10 THRU 12	RD153-1002-0004	. . WASHER	10	
-112	9	RD153-1002-0006	. . WASHER	2	
-113	9 THRU 12	RD153-5002-0004	. . WASHER	12	
-114	11	RD153-5002-0005	. . WASHER	8	
-115	11	RD153-5002-0005	. . WASHER	2	
-116	12	RD153-5002-0006	. . WASHER	2	
-117	10	H19083-4	. . NUT (MFD by 96142)	4	
-118	10 THRU 12	NAS679C3W	. . NUT	21	
-119	9	RD114-8003-1004	. . NUT	4	
-120	12	RD114-8003-1006	. . NUT	2	
-121	11	RD114-8005-1004	. . NUT	2	
-122	12	RD191-4002-1005	. . LUG	1	
-123	11	19-501743-2	. . BOOT, Armored harness, flexible	1	
-124	10, 12	19-501745-3	. . BOOT, Electrical, 90 degree	2	
			---*---		
-125	11	502935-41	. . PLUG ASSY, Electrical, 10SL-3S shell size (Altered from NA5-27556T103S) (Bearing NO. 1) (Tap LS1) (P134)	1	
-126	10	502937-631	. . PLUG ASSY, Electrical, 10SL-3S shell size (Altered from NA5-27556T103S) (Turbine inlet manifold) (Tap TG4a) (P137)	1	
-127	12	502937-631	. . PLUG ASSY, Electrical, 10SL-3S shell size (Altered from NA5-27556T103S) (Engine environmental) (Tap CGT1) (P138)	1	
-128	9	703937-41	. . RECEPTACLE ASSY, Electrical interface, 20-29P shell size (Altered from NA5-27551T2029P) (Interface panel) (J106)	1	
-129	9,13, 17,20	704528	. ARMORED HARNESS ASSY, Flexible pressure transducers to primary junction box P111 (P111 harness)	1	
			THE FOLLOWING HARDWARE IS REQUIRED FOR INSTALLATION OF THE WIRING HARNESS LISTED ABOVE. THESE ITEMS ARE COMPONENTS OF THE FLIGHT INSTRUMENTATION INSTALLATION 702561.		
-130	13	RE127-2004-0009	. . CLAMP	1	
-131	13 THRU 16	RE127-2004-0012	. . CLAMP	12	
-132	13,15,16	RE127-2004-0014	. . CLAMP	2	
-133	13,16	RE127-2004-0015	. . CLAMP	5	
-134	16	RE127-2004-0016	. . CLAMP	1	
-135	16	RE127-2004-0018	. . CLAMP	1	
-136	13	RE127-2005-0009	. . CLAMP	4	
-137	13	RE127-2005-0012	. . CLAMP	1	
-138	16	RE127-2005-0014	. . CLAMP	2	
-139	16	RE127-2005-0015	. . CLAMP	1	
-140	16	RE127-2005-0018	. . CLAMP	1	
-141	14	RD127-7003-0001	. . CLAMP	1	
-141A	16	RE127-2006-0040	. . CLAMP	4	
-142	14	RE127-2004-0015	. . CLAMP	1	
-143	14	RE127-2005-0018	. . CLAMP	1	
-144	14	AN520C10R16	. . SCREW	1	
-145	14	NAS43DD3-24	. . SPACER	1	
-146	14	703902	. . BRACKET ASSY, Harness support, primary "J" box support	1	
-147	14	RD111-4011-6422	. . BOLT (AP)	2	
-148	14	RD153-1002-0004	. . WASHER (AP)	2	
-149	14	RD153-5002-0004	. . WASHER (AP)	2	
-150	14	RD114-8005-1004	. . NUT (AP)	2	
-151	16	703903	. . BRACKET, Standoff, harness support, NO. 1 fuel pump strut	2	
-152	13	703920	. . BRACKET, Harness support, chamber ring pad	1	
-153	13	703901-1	. . SUPPORT, Fuel inlet, flexible armored harness	1	
-154	13	703901-2	. . SUPPORT, Fuel inlet, flexible armored harness	1	
-155	14	703635	. . BRACKET, Harness support, fuel system	2	
-156	15	RE127-2005-0012	. . CLAMP	4	
-157	15	RE127-2004-0009	. . CLAMP	4	
-158	15	AN520C10R30	. . SCREW	4	
-159	15	NAS43DD3-64	. . SPACER	4	
-160	15	LD153-0010-0007	. . WASHER	4	
-161	15	NAS679C3W	. . NUT	4	
-162	15	703913	. . BRACKET, Harness support NO. 2 inlet flange	1	
-163	13,14,16	AN520C10R10	. . SCREW	6	
-164	13,16	AN520C10R12	. . SCREW	6	
-165	13	AN520C10R16	. . SCREW	2	
-166	13,14	AN520C10R20	. . SCREW	2	

FIG. & INDEX NO.	ZONE NO	PART NUMBER	DESCRIPTION 1 2 3 4 5 6 7	UNITS PER ASSY	USABLE ON CODE
34-167	16	MS21279-13	. . BOLT	2	
-168	15	RD111-1009-0305	. . BOLT	1	
-169	13	RD111-4010-0508	. . BOLT	1	
-170	14	RD111-4010-6507	. . BOLT	4	
-171	13,14	NAS43DD3-16	. . SPACER	3	
-172	14	NAS43DD3-40	. . SPACER	1	
-173	13, 15	NAS43DD3-48	. . SPACER	1	
-174	13 THRU 16	LD153-0010-0007	. . WASHER	10	
-175	16	RD153-1002-0003	. . WASHER	2	
-176	13	RD153-5002-0004	. . WASHER	2	
-177	14	RD153-5002-0005	. . WASHER	5	
-178	15	RD153-5004-0003	. . WASHER	1	
-179	13 THRU 16	NAS679C3W	. . NUT	17	
-180	16	RD114-8003-1003	. . NUT	2	
-181	16	19-501743-9	. . BOOT, Armored harness, flexible	1	
			---*---		
		19-704548-2	. . TUBI , Heat shrinkable	5	
		19-704549-9	. . MOLDING, Heat shrinkable	1	
		19-704550	. . TUBE, Heat shrinkable (Use -3, -4, and -5, as applicable)	AR	
-182	16	502935-481	. . PLUG ASSY, Electrical, 28-21P shell size (Altered from NA5-27556T2821P) (Primary instrumentation junction box) (P111)	1	
-183	17	704476	. . PLUG ASSY, Electrical, pressure transducer, 14S-6S shell size (Altered from NA5-27556T146S) (Fuel pump inlet NO. 1) (Tap KF6a-1) (P116)	1	
-184	18	704476-21	. . PLUG ASSY, Electrical, pressure transducer, 14S-6S shell size (Altered from NA5-27556T146S) (Oxidizer pump discharge NO. 2) (Tap PO2a-2) (P117)	1	
-185	18	704476	. . PLUG ASSY, Electrical, pressure transducer, 14S-6S shell size (Altered from NA5-27556T146S) (Oxidizer pump bearing jet) (Tap LB1a) (P118)	1	
-186	19	502937-601	. . PLUG ASSY, Electrical, 14S-6P shell size (Altered from NA5-27556T146S). (Gas generator chamber) (Tap GG1d) (P119)	1	
-187	20	704476	. . PLUG ASSY, Electrical, pressure transducer, 14S-6S shell size (Altered from NA5-27556T146S) (Combustion chamber) (Tap CG1e) (P123)	1	
-188	17	703002	. CLAMP, Harness support	1	
-189	17	RD111-4008-3405	. BOLT (AP)	2	
-190	17	RD153-5002-0004	. WASHER (AP)	2	
-191	17	MS9102-33	. BRACKET	1	
-192	17	RE127-2002-0010	. CLAMP	1	
-193	17	703001	. BLOCK, Harness support	1	
-194	17	RD111-4011-6423	. BOLT (AP)	2	
-195	17	RD153-5002-0004	. WASHER (AP)	2	
-196	17	RD153-1002-0004	. WASHER (AP)	2	
-197	17	RD114-8005-1004	. NUT (AP)	2	
-198	17	703024	. BRACKET, Harness support, inlet elbow, NO. 2	1	
-199	17	RD111-4010-6407	. BOLT (AP)	2	
-200	17	RD153-5002-0004	. WASHER (AP)	2	
-201	17	NA5-27412T2	. TRANSDUCER, Absolute pressure, DC-DC type (NO. 1 fuel pump inlet) (Used on engines F-2043 THRU F-2067) (Tap KF6a-1) (J116)	1	
-201	17	NA5-27440T2	. TRANSDUCER, Absolute pressure, DC-DC type (NO. 1 fuel pump inlet) (Used on engines F-2068 THRU F-2098) (Tap KF6a-1) (J116)	1	
-202	17	RD111-3008-0418	. BOLT (AP)	4	
-203	17	AS30	. WASHER (MFD by 10630) (AP)	4	
-204	17	19-406341	. SEAL ASSY, Plate	1	
-205	17	703006	. ADAPTER ASSY, Transducer mount	1	
-206	17	RD111-3008-0412	. BOLT (AP)	4	
-207	17	AS30	. WASHER (MFD by 10630) (AP)	4	
-208	17	KNL426T5SP	. . INSERT (MFD by 29372)	4	
-209	17	RD251-4084-XXXX	. ORIFICE PLATE (NO. 1 fuel pump inlet pressure) (Orifice size to be determined by calibration tests) (LC)	1	
-210	17	703002	. CLAMP, Harness support	1	
-211	17	RD111-4008-3405	. BOLT (AP)	2	
-212	17	RD153-5002-0004	. WASHER (AP)	2	
-213	18	RE127-2002-0010	. CLAMP	1	
-214	18	703001	. BLOCK, Harness support	1	
-215	18	RD111-4011-6423	. BOLT (AP)	2	
-216	17	RD153-5002-0004	. WASHER (AP)	2	
-217	18	RD153-1002-0004	. WASHER (AP)	2	
-218	18	RD114-8005-1004	. NUT (AP)	2	
-219	18	704502	. BRACKET, Harness support, NO. 2 LOX pump transducer	1	
-220	17	RD111-4008-0506	. BOLT (AP)	2	
-221	17	RD153-5002-0005	. WASHER (AP)	2	
-222	18	704501	. BRACKET, Transducer mount, NO. 2 LOX pump discharge	1	
-223		DELETED			
-224	18	NA5-27412T20	. TRANSDUCER, Absolute pressure, DC-DC type (Oxidizer pump discharge NO. 2) (Used on engines F-2043, F-2044, and (F-2046 THRU F-2067) (Tap PO2a-2) (J117)	1	

FIG. & INDEX NO.	ZONE NO	PART NUMBER	DESCRIPTION 1 2 3 4 5 6 7	UNITS PER ASSY	USABLE ON CODE
34-224	18	NA5-27440T20	. TRANSDUCER, Absolute pressure, DC-DC type (Oxidizer pump discharge NO. 2) (Used on engines F-2045-1 and F-2068 THRU F-2098) (Tap PO2a-2) (J117)	1	
-225	18	RD111-4011-6428	. BOLT (AP)	4	
-226	18	AS30	. WASHER (MFD by 10630) (AP)	4	
-227	18	RD153-1002-0004	. WASHER (AP)	4	
-228	18	RD114-8005-1004	. NUT (AP)	4	
-229	18	303853	. SEAL, Pressure-actuated, instrumentation LOX service (LC)	1	
-230	18	704506	. TUBE ASSY, NO. 2 LOX pump outlet (Welded) (LC)	1	
-231	18	RD111-4008-6410	. BOLT (AP)	4	
-232	18	RD153-5002-0004	. WASHER (AP)	4	
		RD172-0018-2000	. . TAPE (2000 PSI)	AR	
		RD172-0001-0001	. . TAPE (ROCKET OXIDIZER)	AR	
		RD172-0014-0027	. . TAPE (LIQUID OXYGEN)	AR	
-233	18	303853	. SEAL, Pressure-actuated, instrumentation, LOX service (LC)	1	
-234	17	703002	. CLAMP, Harness support	1	
-235	17	RD111-4008-3405	. BOLT (AP)	2	
-236	17	RD153-5002-0004	. WASHER (AP)	2	
-237	20	RE127-2002-0010	. CLAMP	1	
-238	20	703017	. BLOCK, Harness support	1	
-239	20	RD111-4011-6417	. BOLT (AP)	2	
-240	20	RD153-5002-0004	. WASHER (AP)	2	
-241	19	RD153-1002-0004	. WASHER (AP)	2	
-242	19	RD114-8005-1004	. NUT (AP)	2	
-243	19	703146	. BRACKET ASSY, Harness support, transducer coolant valve	1	
-244	19	RD111-4010-6409	. BOLT (AP)	2	
-245	19	RD153 5002-0004	. WASHER (AP)	2	
-246	18	NA5-27440T10	. TRANSDUCER, Absolute pressure, DC-DC type (Oxidizer pump bearing jet) (Tap LB1a) (J118)	1	
-247	19	RD111-3008-0418	. BOLT (AP)	4	
-248	16	AS30	. WASHER (MFD by 10360) (AP)	4	
-249	18	19-406341	. SEAL ASSY, Plate (LC)	1	
-250	20	703925	. CLAMP, Harness support	1	
-251	20	RD111-4008-3405	. BOLT (AP)	2	
-252	20	RD152 5002-0004	. WASHER (AP)	2	
-253	20	RE127-2002-0006	. CLAMP	1	
-254	20	703911	. BLOCK ASSY, Harness support	1	
-255	20	RD111-4011-6423	. BOLT (AP)	2	
-256	20	RD153-5002-0004	. WASHER (AP)	2	
-257	19	RD153-1002-0004	. WASHER (AP)	2	
-258	19	RD114-8005-1004	. NUT (AP)	2	
-259	19	NA5-27440T15P	. TRANSDUCER, Absolute pressure, DC-DC type (Gas generator chamber) (Tap GG1d) (J119)	1	
-260	19	RD111-4009-0420	. BOLT (AP)	4	
-261	19	AS30	. WASHER (MFD by 10630) (AP)	4	
-262	19	RD153-1002-0004	. WASHER (AP)	4	
-263	19	RD114-8005-1004	. NUT (AP)	4	
-264	19	303854	. SEAL, Instrumentation, hot gas (LC)	1	
-265	20	703002	. CLAMP, Harness support	1	
-266	20	RD111-4008-3405	. BOLT (AP)	2	
-267	20	RD153-5002-0004	. WASHER (AP)	2	
-268	20	RE127-2002-0010	. CLAMP	1	
-269	20	703001	. BLOCK, Harness support	1	
-270	20	RD111-4011-6425	. BOLT (AP)	2	
-271	20	RD153-5002-0004	. WASHER (AP)	2	
-272	20	RD153-1002-0004	. WASHER (AP)	2	
-273	20	RD114-8005-1004	. NUT (AP)	2	
-274	20	NA5-27440T15P	. TRANSDUCER, Absolute pressure, DC-DC type (Combustion chamber) (Tap CG1c) (J123)	1	
-275	20	RD111-4009-0419	. BOLT (AP)	4	
-276	20	AS30	. WASHER (MFD by 10630) (AP)	4	
-277	20	RD153-1002-0004	. WASHER (AP)	4	
-278	20	RD114-8003-1004	. NUT (AP)	4	
-279	20	303854	. SEAL, Instrumentation, hot gas (LC)	1	
-280	20	AN814-2JL	. PLUG AND BLEEDER (Supersedes AN814-2CL) (LC)	1	
-281	20	RE261-3004-1002	. SEAL (Interchangeable with 12100AA2 MFD by 08199) (LC)	1	
-282	20	702922-3	. ADAPTER, Transducer mount, thrust chamber pressure	1	
-283	20	RD111-4009-0419	. BOLT (AP)	6	
-284	20	RD153-5002-0004	. WASHER (AP)	6	
-285	20	RD153-1002-0004	. WASHER (AP)	6	
-286	20	RD114-8003-1004	. NUT (AP)	6	
-287	20	303855	. SEAL, Pressure-actuated hot gas (LC)	1	
-288	22,25,28	704526	. ARMORED HARNESS ASSY, Flexible, primary junction box P112 to pressure transducers (P112 harness)	1	

FIG. & INDEX NO.	ZONE NO.	PART NUMBER	DESCRIPTION 1 2 3 4 5 6 7	UNITS PER ASSY.	USABLE ON CODE
34-			THE FOLLOWING HARDWARE IS REQUIRED FOR INSTALLATION OF THE WIRING HARNESS LISTED ABOVE. THESE ITEMS ARE COMPONENTS OF THE FLIGHT INSTRUMENTATION INSTALLATION 702561		
-289	21	RE127-2004-0011	. . CLAMP	4	
-290	21	RE127-2004-0012	. . CLAMP	12	
-291	21	RE127-2004-0013	. . CLAMP	1	
-292	21	RE127-2004-0015	. . CLAMP	2	
-293	21,22	RE127-2004-0016	. . CLAMP	4	
-294	23	RE127-2004-0017	. . CLAMP	1	
-295	23	RE127-2004-0018	. . CLAMP	1	
-296	21	RE127-2005-0011	. . CLAMP	1	
-297	21	RE127-2005-0012	. . CLAMP	4	
-298	21	RE273-2005-0013	. . CLAMP	1	
-299	23	RE273-2005-0015	. . CLAMP	2	
-300	21,22	RE127-2005-0017	. . CLAMP	3	
-301	21	RE127-2001-0008	. . CLAMP	1	
-302	21	RE127-2001-0045	. . CLAMP	5	
-303	23	RE127-2006-0040	. . CLAMP	4	
-304	23	703903	. . BRACKET, Standoff, harness support, NO. 1 fuel pump strut	2	
-305	21	703920	. . BRACKET, Harness support, chamber ring pad	1	
-306	24	RE127-2004-0015	. . CLAMP	1	
-307	24	RE127-2005-0013	. . CLAMP	1	
-308	24	AN520C10R16	. . SCREW (AP)	1	
-309	24	NAS43DD3-24	. . SPACER (AP)	1	
-310	21	703902	. . BRACKET ASSY, Harness support, primary "J" box support	1	
-311	24	RD111-4011-6423	. . BOLT (AP)	2	
-312	24	RD153-1002-0004	. . WASHER (AP)	2	
-313	24	RD153-5002-0004	. . WASHER (AP)	2	
-314	24	RD114-8005-1004	. . NUT (AP)	2	
-315	21,23	AN520C10R10	. . SCREW	11	
-316	21,22	AN520C10R12	. . SCREW	8	
-317	21	AN520C10R26	. . SCREW	1	
-318	23	MS21279-13	. . BOLT	2	
-319	21	RD111-4010-0508	. . BOLT	1	
-319A	21	RD153-5002-0005	. . WASHER	1	
-320	21 THRU 23	LD153-0010-0007	. . WASHER	17	
-321	23	RD153-1002-0003	. . WASHER	2	
-322	21	NAS43DD3-48	. . SPACER	1	
-323	21,23	NAS679C3W	. . NUT	19	
-324	23	RD114-8003-1003	. . NUT	2	
-325	23	19-501743-8	. . BOOT, Armored harness, flexible	1	
			---*---		
		19-704548-2	. . TUBE, Heat shrinkable	3	
		19-704549-8	. . MOLDING, Heat shrinkable	1	
		19-704550-3	. . TUBE, Heat shrinkable	1	
-326	23	502935-421	. . PLUG ASSY, Electrical, 24-28P shell size (Altered from NA5-27556T2428P) (Primary instrumentation junction box) (P112)	1	
-327	25	704476	. . PLUG ASSY, Electrical pressure transducer, 14S-6S shell size (Altered from RD414-1000-0014) (Fuel pump discharge NO. 2 (Tap PF2a-2) (P120)	1	
-328	27	704476	. . PLUG ASSY, Electrical, pressure transducer, 14S-6S shell size (Altered from NA-27556T146S) (Turbine outlet) (Tap TG5c) (P121)	1	
-329	28	704476	. . PLUG ASSY, Electrical, pressure transducer, 14S-6S shell size (Altered from NA5-27556T146S) (Common hydraulic return) (Tap NH5c) (P122)	1	
-330	25	703002	. CLAMP, Harness support	1	
-331	25	RD111-4008-3405	. BOLT (AP)	2	
-332	25	RD153-5002-0004	. WASHER (AP)	2	
-333	25	RE127-2001-0010	. CLAMP	1	
-334	25	703001	. BLOCK, Harness support	1	
-335	25	RD111-4011-6423	. BOLT (AP)	2	
-336	25	RD153-5002-0004	. WASHER (AP)	2	
-337	25	RD153-1002-0004	. WASHER (AP)	2	
-338	25	RD114-8005-1004	. NUT (AP)	2	
-339	25	703832	. BRACKET ASSY, Harness support, discharge transducer, fuel pump	1	
-240	25	RD111-4010-6507	. BOLT (AP)	3	
-341	25	RD153-5002-0005	. WASHER (AP)	3	
-342	25	NA5-27412T25	. TRANSDUCER, Absolute pressure, DC-DC type (Fuel pump discharge NO. 2) (Used on engines F-2043 THRU F-2067) (Tap PF2a-2) (J120)	1	
-342	25	NA5-27440T25	. TRANSDUCER, Absolute pressure, DC-DC type (Fuel pump discharge NO. 2) (Used on engines F-2068 THRU F-2098) (Tap PF2a-2) (J120)	1	

FIG. & INDEX NO.	ZONE NO.	PART NUMBER	1 2 3 4 5 6 7 DESCRIPTION	UNITS PER ASSY	USABLE ON CODE
34-343	25	RD111-4011-6423	. BOLT (AP)	4	
-344	25	RD153-1002-0004	. WASHER (AP)	4	
-345	25	AS30	. WASHER (MFD by 10630) (AP)	4	
-346	25	RD114-8005-1004	. NUT (AP)	4	
-347	25	19-406341	. SEAL ASSY, Plate (LC)	1	
-348	25	703149	. ADAPTER, Transducer mount, NO. 2 fuel pump out	1	
-349	25	RD111-4008-6408	. BOLT (AP)	4	
-350	25	RD153-5002-0004	. WASHER (AP)	4	
-351	25	19-406341	. SEAL ASSY, Plate (LC)	1	
-352	27	703002	. CLAMP, Harness support	1	
-353	27	RD111-4008-3405	. BOLT (AP)	2	
-354	27	RD153-5002-0004	. WASHER (AP)	2	
-355	27	RE127-2002-0010	. CLAMP	1	
-356	27	704503	. SUPPORT, Harness, pressure transducer	1	
-357	27	RD111-4009-0614	. BOLT (AP)	2	
-358	27	RD153-5002-0006	. WASHER (AP)	2	
-359	27	RD153-1002-0006	. WASHER (AP)	2	
-360	27	RD114-8005-1006	. NUT (AP)	2	
-361	26	704504	. MOUNT, Transducer, pressure, turbine outlet	1	
-362	26	RD111-4009-0614	. BOLT (AP)	2	
-363	26	RD153-5002-0006	. WASHER (AP)	2	
-364	26	RD153-1002-0006	. WASHER (AP)	2	
-365	26	RD114-8005-1006	. NUT (AP)	2	
-366	27	NA5-27440T1P	. TRANSDUCER, Absolute pressure, DC-DC type (Turbine outlet) (Tap TG5c) (J121)	1	
-367	27	RD111-4011-6428	. BOLT (AP)	4	
-368	26,27	AS30	. WASHER (MFD by 10630) (AP)	8	
-369	26	RD114-8005-1004	. NUT (AP)	4	
-370	26	303854	. SEAL, Instrumentation hot gas (LC)	1	
-371	26,27	MS9104-55	. BRACKET	2	
-372	26	NAS1006-5A	. BOLT (AP)	1	
-373	26	RD153-5004-0006	. WASHER (AP)	1	
-374	26	NAS679C6	. NUT (AP)	1	
-375	26,27	RE127-2001-0005	. CLAMP	3	
-376	25,26	AN520C10R10	. SCREW (AP)	1	
-377	26,27	LD153-0010-0007	. WASHER (AP)	1	
-378	26,27	NAS679C3W	. NUT (AP)	1	
-379	26,28	703203-441	. HOSE ASSY, Flexible, Instrumentation (Turbine outlet pressure hose) (LC)	1	
-380	28	RD111-4008-0409	. BOLT (AP)	4	
-381	28	RD153-5002-0004	. WASHER (AP)	4	
		RD172-0018-0100	. . TAPE (100 PSI)	AR	
		RD172-0014-0006	. . TAPE (COMBUSTION GAS)	AR	
-382	28	303854	. SEAL, Instrumentation, hot gas (LC)	1	
-383	28	703002	. CLAMP, Harness support	1	
-384	28	RD111-4008-3405	. BOLT (AP)	2	
-385	28	RD153-5002-0004	. WASHER (AP)	2	
-386	28	RE127-2002-0010	. CLAMP	1	
-387	28	703001	. BLOCK, Harness support	1	
-388	28	RD111-4011-6423	. BOLT (AP)	2	
-389	28	RD153-5002-0004	. WASHER (AP)	2	
-390	28	RD153-1002-0004	. WASHER (AP)	2	
-391	28	RD114-8005-1004	. NUT (AP)	2	
-392	28	703919	. BRACKET, Swirl chamber transducer, harness support	1	
-393	28	NA5-27440T5	. TRANSDUCER, Absolute pressure, DC-DC type (Common hydraulic return) (Tap NH5c) (J122)	1	
-394	28	RD111-4008-0408	. BOLT (AP)	4	
-395	28	AS30	. WASHER (MFD by 10630) (AP)	4	
-396	28	19-406341	. SEAL ASSY, Plate (LC)	1	
-397	31	704531	. ARMORED HARNESS ASSY, Flexible, junction box P113 to engine components (P113 harness)	1	
			THE FOLLOWING HARDWARE IS REQUIRED FOR INSTALLATION OF THE WIRING HARNESS LISTED ABOVE. THESE ITEMS ARE COMPONENTS OF THE FLIGHT INSTRUMENTATION INSTALLATION 702561.		
-398	30,31	RE127-2004-0009	. . CLAMP	2	
-399	29	RE127-2004-0011	. . CLAMP	1	
-400	29,31,32	RE127-2004-0012	. . CLAMP	3	
-401	29	RE127-2004-0013	. . CLAMP	-	
-402	32	RE127-2004-0014	. . CLAMP	1	
-403	29,31	RE127-2004-0015	. . CLAMP	5	
-404	29,31	RE127-2004-0016	. . CLAMP	3	
-405	32	RE127-2005-0009	. . CLAMP	2	

FIG. & INDEX NO	ZONE NO	PART NUMBER	DESCRIPTION	UNITS PER ASSY.	USABLE ON CODE
			1 2 3 4 5 6 7		
34-406	31	RE127-2005-0014	. . CLAMP	1	
-407	31	RE127-2005-0015	. . CLAMP	2	
-408	31	RE127-2005-0018	. . CLAMP	1	
-409	29	RE127-2001-0006	. . CLAMP	2	
-409A	31	RE127-2006-0040	. . CLAMP	4	
-410	31	RE127-2004-0015	. . CLAMP	1	
-411	31	RE127-2005-0016	. . CLAMP	1	
-412	31	AN520C10R16	. . SCREW (AP)	1	
-413	31	703902	. . BRACKET ASSY, Harness support, primary "J" box support	1	
-414	31	RD111-4011-6422	. . BOLT (AP)	2	
-415	31	RD153-1002-0004	. . WASHER (AP)	2	
-416	31	RD153-5002-0004	. . WASHER (AP)	2	
-417	31	RD114-8005-1004	. . NUT (AP)	2	
-418	32	RE127-2004-0013	. . CLAMP	1	
-419	32	RE127-2004-0011	. . CLAMP	2	
-420	32	AN520C10R10	. . SCREW (AP)	3	
-421	32	LD153-0010-0007	. . WASHER (AP)	2	
-422	32	NAS679C3W	. . NUT (AP)	2	
-423	31	703903	. . BRACKET, Standoff harness support, NO. 1 fuel pump strut	2	
-424	29	703920	. . BRACKET, Harness support, chamber ring pad	1	
-425	29	703635	. . BRACKET, Harness support, fuel system	1	
-426	29	MS6104-14	. . BRACKET	1	
-427	29,31	AN520C10R10	. . SCREW	5	
-428	29,31,32	AN520C10R12	. . SCREW	6	
-429	29,31	MS21279-13	. . BOLT	2	
-429	29,31	AN520C10R18	. . SCREW	2	
-430	29	RD111-4010-0508	. . BOLT	1	
-431	29	RD111-4010-6507	. . BOLT	2	
-432	29,30,31	LD153-0010-0007	. . WASHER	10	
-433	29	RD153-5002-0005	. . WASHER	2	
-434	31	RD153-1002-0003	. . WASHER	2	
-435	29	NAS43DD3-32	. . SPACER	2	
-436	29 THRU 32	NAS679C3W	. . NUT	16	
-437	31	RD114-8003-1003	. . NUT	2	
-438	30	19-501743-7	. . BOOT, Armored harness, flexible	1	
-439	29	19-501745-3	. . BOOT, Armored harness, flexible	1	
-440	29	19-501743-4	. . BOOT, Armored harness, flexible	1	
-441	29	19-501745-4	. . BOOT, Armored harness, flexible ---*---	1	
-442	30	502935-341	. . PLUG ASSY, Electrical, 22-14P shell size (Altered from NA5-27556T2214P) (Primary instrumentation junction box) (P113)	1	
-443	29	502937-91	. . PLUG ASSY, Electrical, 14S-2S shell size (Altered from NA5-27556T142S) (Gas generator ball valve position switch) (P53)	1	
-444	29	502937-171	. . PLUG ASSY Electrical, 16S-1S shell size (Altered from NA5-27556T161S) (NO. 1 oxidizer valve position transducer) (P70)	1	
-445	29	502937-171	. . PLUG ASSY, Electrical, 16S-1S shell size (Altered from NA5-27556T161S) (NO. 1 fuel valve position transducer) (P76)	1	
-446	35	704532	. ARMORED HARNESS ASSY, Flexible, P128 to primary junction box P114 (P114 narness) THE FOLLOWING HARDWARE IS REQUIRED FOR INSTALLATION OF THE WIRING HARNESS LISTED ABOVE. THESE ITEMS ARE COMPONENTS OF THE FLIGHT INSTRUMENTATION INSTALLATION 702561.	1	
-447	34	RE127-2004-0011	. . CLAMP	6	
-448	34	RE127-2004-0013	. . CLAMP	3	
-449	34	RE127-2004-0015	. . CLAMP	1	
-450	34,36	RE127-2004-0016	. . CLAMP	4	
-451	36	RE127-2004-0017	. . CLAMP	1	
-452	36	RE127-2004-0018	. . CLAMP	1	
-453	34	RE127-2005-0012	. . CLAMP	1	
-454	34	RE127-2005-0013	. . CLAMP	1	
-455	35,36	RE127-2005-0015	. . CLAMP	2	
-456	34,36	RE127-2005-0017	. . CLAMP	2	
-457		DELETED			
-458	34	RE127-2001-0006	. . CLAMP	1	
-459	35	RE127-2006-0040	. . CLAMP	4	
-460	35,36	703903	. . BRACKET, Standoff harness support, NO. 1 fuel pump strut	2	
-461	34	703920	. . BRACKET, Harness support, chamber ring pad	1	
-462	34	703635	. . BRACKET, Harness support, fuel system	1	
-463	36	RE127-2004-0015	. . CLAMP	1	
-464	36	RE127-2005-0016	. . CLAMP	1	
-465	36	AN520C10R16	. . SCREW	1	
-466	36	703902	. . BRACKET ASSY, Harness support, primary "J" box support QNHA 407001)	1	
-467	36	RD111-4011-6422	. . BOLT	2	

FIG. & INDEX NO	ZONE NO.	PART NUMBER	DESCRIPTION 1 2 3 4 5 6 7	UNITS PER ASSY	USABLE ON CODE
34-468	36	RD153-1002-0004	. . WASHER	2	
-469	36	RD153-5002-0004	. . WASHER	2	
-470	36	RD114-8005-1004	. . NUT	2	
-471	34,36	AN520C10R10	. . SCREW	5	
-472	34,36	AN520C10R12	. . SCREW	5	
-473	34	AN520C10R16	. . SCREW	3	
-474	34	MS9102-33	. . BRACKET	1	
-474A	34	RD111-1009-6406	. . BOLT	1	
-474B	34	LD153-0010-0010	. . WASHER	1	
-474C	34	RE127-2007-0011	. . CLAMP	1	
-474D	34	AN520C10R8	. . SCREW (Used on engines F-2043 THRU F-2082)	1	
-474E	34	AN520C10R16	. . SCREW (Used on engines F-2082 and SUBS)	1	
-474F	34	RD153-5002-0004	. . WASHER	1	
-474G	34	LD153-0010-0007	. . WASHER	1	
-474H	34	NAS679C3W	. . NUT	1	
-475	35	MS21279-13	. . BOLT	1	
-476	34	RD111-4010-0508	. . BOLT	2	
-477	34	RD111-4010-6507	. . BOLT	1	
-478	34,36	LD153-0010-0007	. . WASHER	2	
-479	34,35	RD153-1002-0003	. . WASHER	13	
-480	34	RD153-5002-0005	. . WASHER	2	
-481	34	RD153-5002-0005	. . WASHER	2	
-482	34	NAS43DD3-24	. . SPACER	1	
-483		DELETED		3	
-484	34,36	NAS679C3W	. . NUT	13	
-485	35	RD114-8003-1003	. . NUT	2	
-486	33	19-501743-6	. . BOOT, Armored harness, flexible	1	
-487	34	19-501743-4	. . BOOT, Armored harness, flexible	2	
-488	34	19-501743-12	. . BOOT, Armored harness, flexible	1	
			---*---		
		19-704549	. . MOLDING, Heat shrinkable (Use -2, -4, and -6 as applicable)	AR	
		19-704550-2	. . TUBE, Heat shrinkable	2	
-489	33	502935-301	. . PLUG ASSY, Electrical, 20-29P shell size (Altered from NA5-27556T2029P) (Primary instrumentation junction box) (P114)	1	
-490	34	502935-171	. . PLUG ASSY, Electrical, 16S-1S shell size (Altered from NA5-27556T161S) (NO. 2 oxidizer valve position transducer) (P71)	1	
-491	34	502935-171	. . PLUG ASSY, Electrical, 16S-1S shell size (Altered from NA5-27556T161S) (NO. 2 fuel valve position transducer) (P77)	1	
-492	34	502936-41	. . RECEPTACLE ASSY, 10SL-3P shell size (Altered from NA5-27550T103P) (Engine control valve stop solenoid and engine cutoff signal to vehicle) (J128)	1	
-493	34	AN515C4R7	. . SCREW (AP)	4	
-494	34	LD153-0010-0001	. . WASHER (AP)	4	
-495	34	NAS679C04W	. . NUT(AP)	4	
-496	33	702810-21	. JUNCTION BOX ASSY, Flight instrumentation, primary (Primary junction box) (J108, J109, J110, J111, J112, J113, J114 and J115)	1	
-497	33	RD111-4010-6408	. BOLT (AP)	4	
-498	33	RD153-5002-0004	. WASHER (AP)	4	
-498A	35	703103-7	. STRUT, Junction box support	1	
-498B	35	RD114-1005-0004	. NUT (AP)	1	
-498C	35	RE131-7002-0003	. ROD END (AP)	1	
-498D	35	RE131-7001-0005	. ROD END (AP)	1	
-498E	35	RD114-1007-0004	. NUT (AP)	1	
-498F	35	703103-9	. STRUT, Junction box support	1	
-498G	35	RD114-1005-0004	. NUT (AP)	1	
-498H	35	RE131-7002-0003	. ROD END (AP)	1	
-498J	35	RE131-7002-0003	. ROD END (AP)	1	
-498K	35	RD114-1007-0004	. NUT (AP)	1	
-498L	35	RD114-8005-1006	. NUT (AP)	1	
-498M	35	RD153-1002-0006	. WASHER (AP)	1	
-498N	35	RD153-5002-0006	. WASHER (AP)	1	
-498P	35	RD111-4011-6635	. BOLT (AP)	1	
-498Q	35	RD114-8005-1006	. NUT (AP)	1	
-498R	35	RD153-1002-0006	. WASHER (AP)	2	
-498S	35	RD153-5002-0006	. WASHER (AP)	2	
-498T	35	RD111-4011-6625	. BOLT (AP)	2	
-499	14,31	703108-5	SUPPORT, Primary auxiliary J-box struts (NHA 407001)	REF	
-500	29	602102	TUBE ASSY, Sequence valve to gas generator open (Gas generator ball valve open tube) (NHA 601601) (LC)	REF	
-501	29	410099	TUBE ASSY, Manifold to tee, oxidizer overboard drain (NHA 407001) (LC)	REF	
-502	32	703636-2	BRACKET, Harness support, main valve potentiometer (NHA 407001)	REF	
-502A	32	410079	TUBE ASSY, Dome purge, NO. 1 main oxidizer valve (NHA 407001) (NO. 1 oxidizer dome purge tube) (LC)	REF	
-503	5	410052	TUBE ASSY, Facility check calips switch (NHA 407001) (LC)	REF	
-504	5	502979	BRACKET ASSY, Harness discharge flange, LOX pump, NO. 2 (NHA 407001)	REF	
-505	6	703633	BRACKET, Harness support, LOX pump discharge flange (NHA 502001)	REF	
-506	6	502980	BRACKET, Harness, LOX pump discharge flange (NHA 502001)	REF	
-507	11	410648	BRACKET ASSY, Tee (NHA 407001)	REF	
-508	12	502976	PANEL, Igniter harness (NHA 407001)	REF	
-509	33	209202-45	BRACKET, Thrust chamber body (NHA 209202)	REF	
-510	21	703910	BRACKET ASSY, Tee, harness support (NHA 308211)	REF	
-511	24	502948	HARNESS ASSY, Armored flexible (NHA 502001)	REF	
-511	24	502948-11	HARNESS ASSY, Armored flexible (NHA 502001)	REF	
-512	21	502944	HARNESS ASSY, Armored flexible, inboard (J18 and J20 harness) (NHA 502001)	REF	
-513	6	502943	HARNESS ASSY, Armored J800 to heaters (J800 harness) (NHA 502001)	REF	
			Figure 35 deleted.		

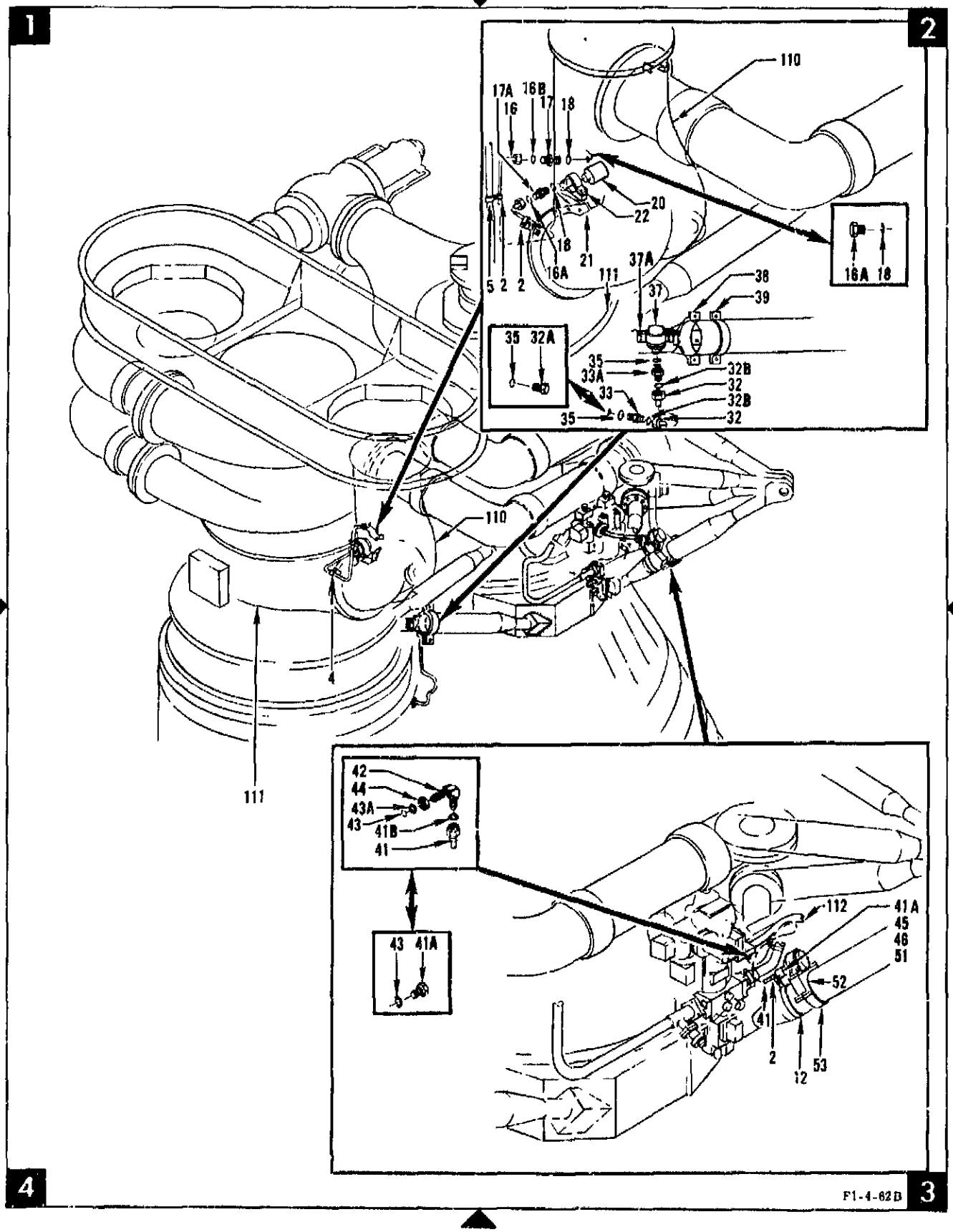

Figure 36. Static-Firing Instrumentation Installation (Engines F-2029 Through F-2042) (View I) (Sheet 1 of 2)

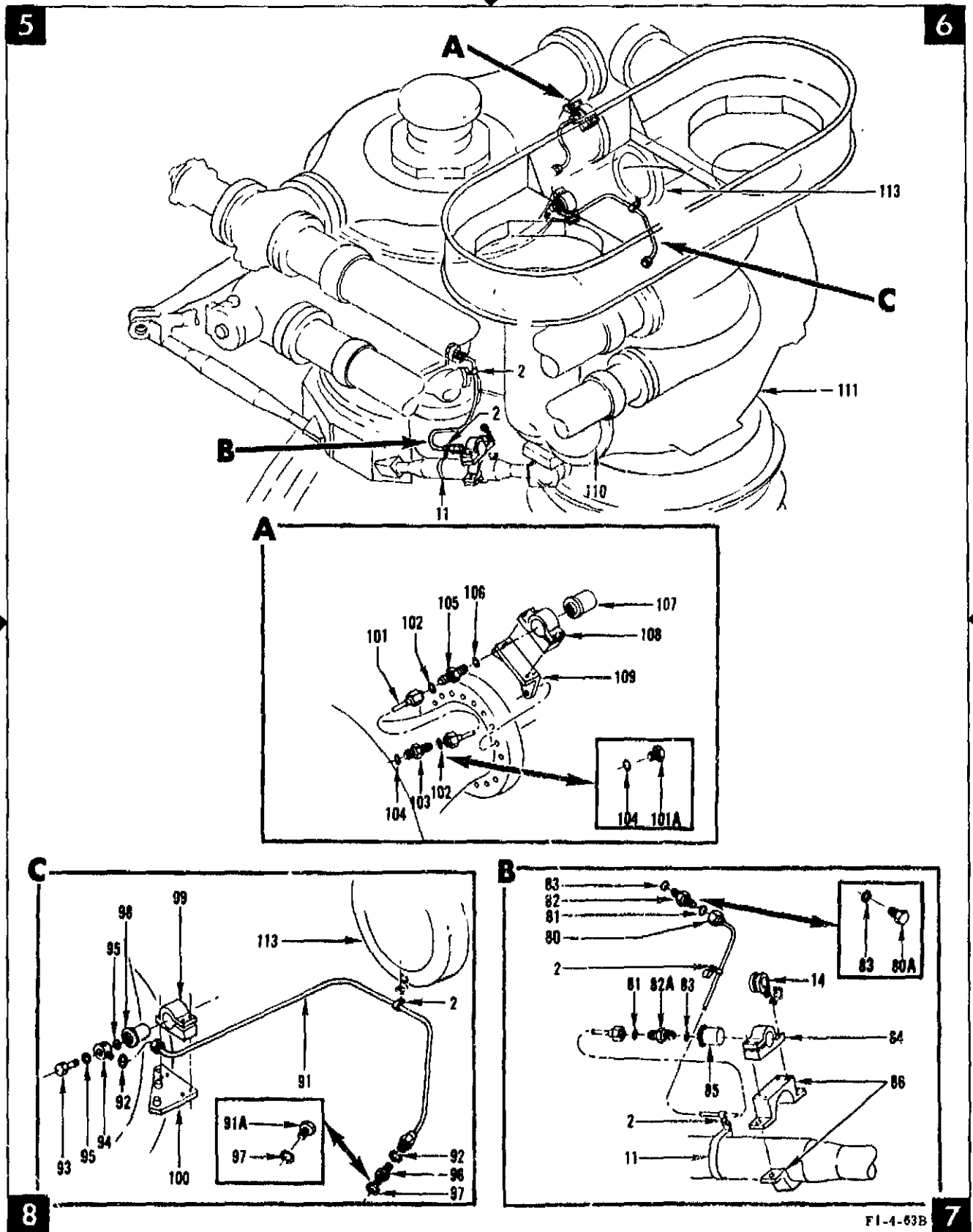

Figure 36. Static-Firing Instrumentation Installation (Engines F-2029 Through F-2042) (View I) (Sheet 2 of 2)

FIG & INDEX NO.	ZONE NO	PART NUMBER	DESCRIPTION 1 2 3 4 5 6 7	UNITS PER ASSY	USABLE ON CODE
36-		SF703401	STATIC FIRING INSTRUMENTATION INSTALLATION (Engines F-2029 THRU F-2042) (See figure 1, index 7, for REQMT)	REF	
			PARTIAL BREAKDOWN FOLLOWS		
- 1		DELETED			
- 2	2,3,4,6,7	RE127-2001-0002	CLAMP	6	
- 3	4	RE127-2001-0004	. CLAMP	1	
- 4		DELETED			
- 5	2	RE127-2001-0007	. CLAMP	1	
- 6					
THRU					
-10		DELETED			
-11	5,7	RE127-2001-0043	. CLAMP	1	
-12	3	RE127-2001-0015	. CLAMP	1	
-13		DELETED			
-14	7	MS21919WH10	. CLAMP	1	
-15		DELETED			
		AN520C10R8	. SCREW (AP)	1	
		AN520C10R16	. SCREW (AP)	1	
		LD153-0010-0007	. WASHER (AP)	1	
		NAS679C3W	. NUT (AP)	2	
		NAS43DD3-40	. SPACER	1	
		MS9101-05	. BRACKET	4	
		MS9102-03	. BRACKET	1	
		MS9102-05	. BRACKET	1	
		MS9102-40	. BRACKET	1	
		MS9102-51	. BRACKET	5	
		MS9102-61	. BRACKET	1	
		MS9103-14	. BRACKET	3	
		MS9103-15	. BRACKET	1	
		MS9103-16	. BRACKET	1	
		MS9103-24	. BRACKET	1	
		MS9103-51	. BRACKET	2	
		NAS1101C3H6	. SCREW (AP)	1	
		NAS1004-5H	. BOLT (AP)	1	
		RD111-1009-6506	. BOLT (AP)	1	
		RD111-1011-6407	. BOLT (AP)	1	
		LD153-0010-0007	. WASHER (AP)	1	
		LD153-0010-0009	. WASHER (AP)	1	
		LD153-0013-0002	. WASHER (AP)	1	
		LD153-0013-0003	. WASHER (AP)	1	
		RD153-5002-0004	. WASHER (AP)	1	
		NAS679C4W	. NUT (AP)	1	
-16	2	SF704302	. TUBE ASSY, Static firing instrumentation, KF6d-2 parameter (Replaced by AN814-4JL at KF6d-2 port after static firing incorporating MD102 change) (LC)	1	
		MC124C4W	. . NUT (MFD by 92003)	2	
		MS20819-4J	. . SLEEVE (Replace MS20819-4C for all applications)	2	
		RD172-0014-0033	. . TAPE (RP-1)	AR	
		RD172-0002-0001	. . TAPE (ROCKET FUEL)	AR	
		RD172-0018-0200	. . TAPE (200 PSI)	AR	
		SF704302-3	. . TUBE, 304 CRES, 1/4 IN. OD by 0.049 gage by 21.00 IN. LG	1	
-16A	2	AN814-4JL	. PLUG AND BLEEDER (Supersedes AN814-4CL) (Replaces SF704302 at KF6d-2 port and associated hardware after static firing on engines incorporating MD102 change) (LC)	1	
-16B	2	VSF1015C4	. SEAL (MFD by 92215) (LC)	1	
-17	2	RD273-2004-2004	. UNION (LC)	1	
-17A	2	NA5-24002T2	. FITTING, Orifice (LC)	1	
-18	2	RD262-3001-0004	. GASKET (LC)	2	
-19		DELETED			
-20	2	SF703821	. TRANSDUCER, Simulated, static test	1	
-21	2	SF703119-11	. SUPPORT ASSY, Cap, inlet flange, fuel pump	1	
		AN3H3A	. BOLT (AP)	6	
		LD153-0010-0008	. WASHER (AP)	6	
-22	2	SF703819	. CLAMP, Transducer, static test	1	
		RD111-4008-3424	. BOLT (AP)	2	
		RD111-4010-0416	. BOLT (AP)	2	
		RD153-5002-0004	. WASHER (AP)	4	
-23					
THRU					
-31		DELETED			
-32	2	SF704310	. TUBE ASSY, Static firing instrumentation, TG5a parameter (Replaced by AN814-4JL at TG5a port after static firing on engines incorporating MD102 change) (LC)	1	
		MC124C4W	. . NUT (MFD by 92003)	2	
		MS20819-4J	. . SLEEVE (Replaces MS20819-4C for all applications)	2	

FIG & INDEX NO	ZONE NO.	PART NUMBER	DESCRIPTION 1 2 3 4 5 6 7	UNITS PER ASSY	USABLE ON CODE
36-		RD172-0014-0006	. . TAPE (COMBUSTION GAS)	AR	
		RD172-0007-0001	. . TAPE (COMPRESSED GAS)	AR	
		RD172-0018-0100	. . TAPE (100 PSI)	AR	
		SF704310-3	. . TUBE, 304 CRES, 1/4 IN. OD by 0.049 gage by 30.00 IN. LG	1	
-32A	2	AN814-4JL	. PLUG AND BLEEDER (Supersedes AN814-4CL) (Replaces SF704310 at TG5a port and associated hardware after static firing on engines incorporating MD102 change) (LC)	1	
-32B	2	VSF1015C4	. SEAL (MFD by 08199) (LC)	2	
-33	2	RD273-2004-2004	. UNION (LC)	1	
-33A	2	NA5-24002T2	. FITTING, Orifice (LC)	1	
-34		DELETED			
-35	2	RE261-3004-1004	. SEAL (Interchangeable with 12100AA4 MFD by 08199) (LC)	2	
-36		DELETED			
-37	2	SF703821	. TRANSDUCER, Simulated, static test	1	
-37A	2	SF703819	. CLAMP, Transducer, static test	1	
		RD111-4010-0416	. BOLT (AP)	2	
		RD111-4008-3424	. BOLT (AP)	2	
		RD153-5002-0004	. WASHER (AP)	4	
-38	2	SF703801-3	. SUPPORT, Cap, 4.00 strut, 90 degree	1	
		RD111-4011-[illegible]7	. BOLT (AP)	2	
		RD153-5002-0005	. WASHER (AP)	2	
		RD153-1002-0005	. WASHER (AP)	2	
		RD114-8005-1005	. NUT (AP)	2	
-39	2	308228	. STRAP, Strut bracket, pressurization system	1	
-40		DELETED			
-41	3,4	SF704320	. TUBE ASSY, Static firing instrumentation, NH2b parameter (Replaced by AN814-4JL at NH2b port after static firing on engines incorporating MD102 change (LC)	1	
		MC124C4W	. . NUT (MFD by 92003)	2	
		MS20819-4J	. . SLEEVE (Replaces MS20819-4C for all applications)	2	
		RD172-0001-0001	. . TAPE (ROCKET OXIDIZER)	AR	
		RD172-0014-0033	. . TAPE (RP-1)	AR	
		RD172-0018-2500	. . TAPE (2500 PSI)	AR	
		SF704320-3	. . TUBE, 304 CRES, 1/4 IN. OD by 0.049 gage by 37.00 IN. LG	1	
-41A	3,4	AN814-4JL	. PLUG AND BLEEDER (Supersedes AN814-4CL) (Replaces SF704320 at NH2b port and associated hardware after static firing on engines incorporating MD102 change) (LC)	1	
-41B	4	VSF1015C4	. SEAL (MFD by 92215) (LC)	2	
-42	4	AN833-4J	. ELBOW (LC) (Supersedes AN833-4C)	1	
-43	4	RD282-3001-0004	. GASKET (LC)	1	
-43A	4	RD282-1002-0004	. RING (LC)	1	
-44	4	RD114-1003-1004	. NUT (LC)	1	
-45	3	NA5-24002T2	. FITTING, Orifice (LC)	1	
-46	3	SF703819	. CLAMP, Transducer, static test	1	
		RD111-4008-3424	. BOLT (AP)	2	
		RD111-4010-0416	. BOLT (AP)	2	
		RD153-5002-0004	. WASHER (AP)	4	
-46A THRU -50		DELETED			
-51	3	SF703821	. TRANSDUCER, Simulated, static test (LC)	1	
-52	3	SF703405-3	. SUPPORT, Cap, 4.00 strut	1	
		RD111-4011-0527	. BOLT (AP)	2	
		RD153-5002-0005	. WASHER (AP)	2	
		RD153-1002-0005	. WASHER (AP)	2	
		RD114-8005-1005	. NUT (AP)	2	
-53	3	309228	. STRAP, Strut bracket, pressurization system	1	
-54 THRU -79		DELETED			
-80	7	SF704309	. TUBE ASSY, Static firing instrumentation, GG1b parameter (Replaced by AN814-4JL at GG1b port after static firing on engines incorporating MD102 change) (LC)	1	
		MC124C4W	. . NUT (MFD by 92003)	2	
		MS20819-4J	. . SLEEVE (Replaces MS20819-4C for all applications)	2	
		RD172-0007-0001	. . TAPE (COMPRESSED GAS)	AR	
		RD172-0014-0006	. . TAPE (COMBUSTION GAS)	AR	
		RD172-0018-1500	. . TAPE (1500 PSI)	AR	
		SF704309-3	. . TUBE, 304 CRES, 1/4 IN. OD by 0.049 gage by 27.00 IN. LG	1	
-80A	7	AN814-4JL	. PLUG AND BLEEDER (Supersedes AN814-4CL) (Replaces SF704309 at GG1b port and associated hardware after static firing on engines incorporating MD102 change) (LC)	1	
-81	7	VSF1015C4	. SEAL (MFD by 92215) (LC)	2	
-82	7	AN815-4[illegible]	. UNION (Supersedes AN815-4C) (LC)	1	
-82A	7	NA5-24002T2	. FITTING, Orifice (LC)	1	
-83	7	RE261-3004-1004	. SEAL (Interchangeable with 12100AA4 MFD by 08199) (LC)	2	
-84	7	SF703819	. CLAMP, Transducer, static test	1	
		RD111-4008-3424	. BOLT (AP)	2	
		RD111-4010-0416	. BOLT (AP)	2	
		RD153-5002-0004	. WASHER (AP)	4	

FIG. & INDEX NO	ZONE NO	PART NUMBER	DESCRIPTION 1 2 3 4 5 6 7	UNITS PER ASSY	USABLE ON CODE
36-85	7	SF703821	. TRANSDUCER, Simulated, static test (LC)	1	
-86	7	SF703406-3	. SUPPORT, Cap, 3.50 IN. strut	1	
		RD111-1010-0529	. BOLT (AP)	2	
		RD153-5002-0005	. WASHER (AP)	2	
		RD153-1002-0005	. WASHER (AP)	2	
		RD114-8005-1005	. NUT (AP)	2	
-87 THRU -90		DELETED			
-91	8	SF704322	. TUBE ASSY, Static firing instrumentation, PO7b parameter (Replaced by AN814-4JL at PO7b port after static firing on engines incorporating MD102 change) (LC)	1	
		MC124C4W	. . NUT (MFD by 92003)	2	
		MS20819-4J	. . SLEEVE (Replaces MS20819-4C for all applications)	2	
		RD172-0001-0001	. . TAPE (ROCKET OXIDIZER)	AR	
		RD172-0014-0027	. . TAPE (LIQUID OXYGEN)	AR	
		RD172-0018-0025	. . TAPE (25 PSI)	AR	
		SF704322-3	. . TUBE, 304 CRES, 1/4 IN. OD by 0.049 gage by 37.00 IN. LG	1	
-91A	8	AN814-4JL	. PLUG AND BLEEDER (Supersedes AN814-4CL) (Replaces SF704322 at PO7b port and associated hardware after static firing on engines incorporating MD102 change) (LC)	1	
-92	8	VSF1015C4	. SEAL (MFD by 92215) (LC)	2	
-93	8	500103C4	. BOLT (MFD by 08199) (LC)	1	
-94	8	500101C4	. FITTING (MFD by 08199) (LC)	1	
-95	8	12120CR4	. SEAL (MFD by 08199) (LC)	2	
-96	8	NA5-24002T2	. FITTING, Orifice (LC)	1	
-97	8	RE261-3004-0004	. SEAL (Interchangeable with 12100CR4 MFD by 08199) (LC)	1	
-98	8	SF703821	. TRANSDUCER, Simulated, static test (LC)	1	
-99	8	SF703819	. CLAMP, Transducer, static test	1	
		RD111-4010-0416	. BOLT (AP)	2	
		RD111-4010-0429	. BOLT (AP)	2	
		RD153-5002-0004	. WASHER (AP)	4	
-99A		VSF1015C4	. SEAL (MFD by 99215) (LC)	1	
-100	8	SF703413-3	. SUPPORT, Cap dome	1	
		NAS1006-4H	. BOLT (AP)	3	
		RD153-5004-1004	. WASHER (AP)	3	
-101	8	SF704308	. TUBE ASSY, Static firing instrumentation, CG1d parameter (Replaced by AN814-4JL at CG1d port after static firing on engines incorporating MD102 change) (LC)	1	
		MC124C4W	. . NUT (MFD by 92003)	2	
		MS20819-4J	. . SLEEVE (Replaces MS20819-4C for all applications)	2	
		RD172-0007-0001	. . TAPE (COMPRESSED GAS)	AR	
		RD172-0014-0006	. . TAPE (COMBUSTION GAS)	AR	
		RD172-0018-1500	. . TAPE (1500 PSI)	AR	
		SF704308-3	. . TUBE, 304 CRES, 1/4 IN. OD by 0.049 gage by 18.00 IN. LG	1	
-101A	7	AN814-4JL	. PLUG AND BLEEDER (Supersedes AN814-4CL) (Replaces SF704308 at CG1d port and associated hardware after static firing on engines incorporating MD102 change) (LC)	1	
-102	8	VSF1015C4	. SEAL (MFD by 92215) (LC)	2	
-103	8	RD273-2004-2004	. UNION (LC)	1	
-104	7,8	RE261-3004-1004	. SEAL (Interchangeable with 12100AA4 MFD by 08199) (LC)	1	
-105	5	NA5-24002T2	. FITTING, Orifice (LC)	2	
-106	5	RE261-3004-1004	. SEAL (Interchangeable with 12100AA4 MFD by 08199) (LC)	1	
107	6	SF703821	. TRANSDUCER, Simulated, static test (LC)	1	
-108	7	SF703819	. CLAMP, Transducer, static test	1	
		RD111-4010-0416	. BOLT (AP)	2	
		RD111-4010-0429	. BOLT (AP)	2	
		RD153-5002-0004	. WASHER (AP)	4	
-109	7	SF703403-3	. SUPPORT, Cap	1	
		NAS1005-7H	. BOLT (AP)	5	
		RD153-5003-0004	. WASHER (AP)	5	
-110	2,6	404912	ELBOW ASSY, Fuel inlet, NO. 2 (Welded) (NHA 407001) (LC)	REF	
-111	2,4,6	458800-131	TURBOPUMP ASSY (NHA 407001)	REF	
-111	2,4,6	458800-141	TURBOPUMP ASSY (NHA 407001)	REF	
-111	2,4,6	458800-161	TURBOPUMP ASSY (NHA 407001)	REF	
-111	2,4,6	458800-171	TURBOPUMP ASSY (NHA 407001)	REF	
-112	3	602089	TUBE ASSY, System close (Welded) (NHA 601601) (Propellant valves close tube) (LC)	REF	
-113	6,8	406816	DUCT ASSY, Oxidizer, high pressure, NO. 2 (Welded) (NHA 407001) (LC)	REF	
		SF703401	STATIC FIRING INSTRUMENTATION INSTL (Continued for engines F-2029 THRU F-2042) (See figure 37)	REF	

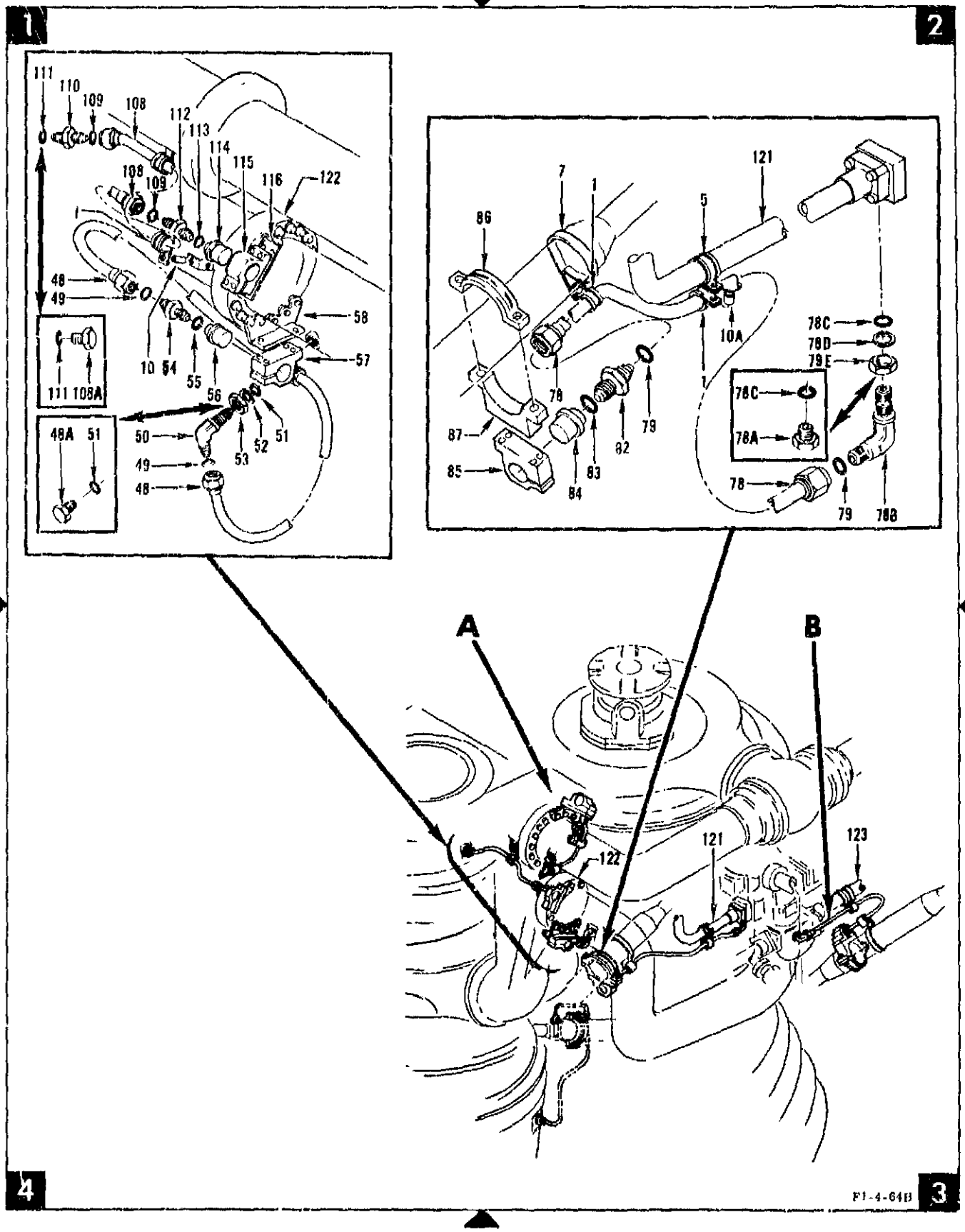

Figure 37. Static-Firing Instrumentation Installation (Engines F-2029 Through F-2042) (View II) (Sheet 1 of 3)

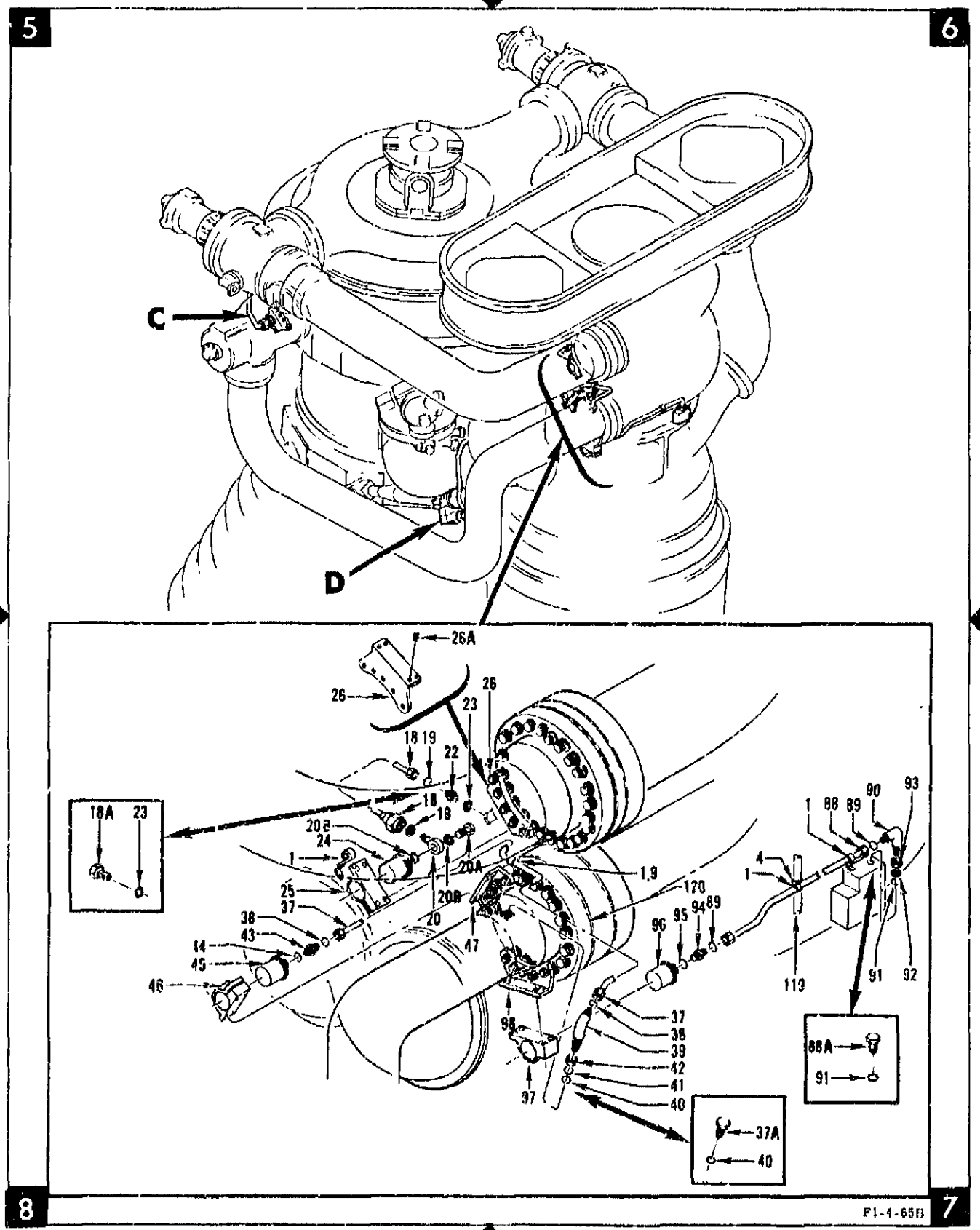

Figure 37. Static-Firing Instrumentation Installation (Engines F-2029 Through F-2042) (View II) (Sheet 2 of 3)

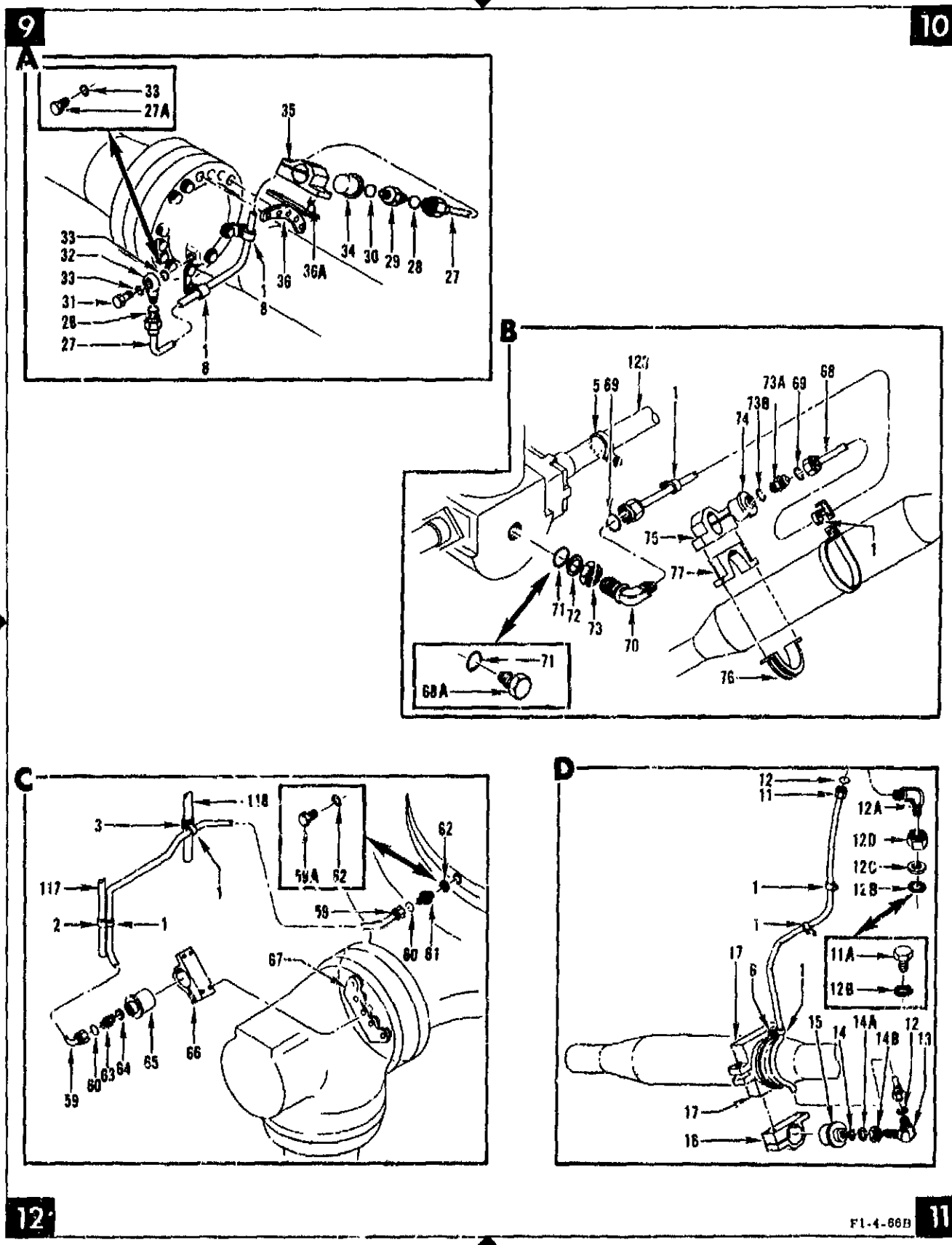

Figure 37. Static-Firing Instrumentation Installation (Engines F-2029 Through F-2042) (View II) (Sheet 3 of 3)

FIG & INDEX NO	ZONE NO	PART NUMBER	DESCRIPTION 1 2 3 4 5 6 7	UNITS PER ASSY	USABLE ON CODE
37-		SF703401	STATIC FIRING INSTRUMENTATION INSTALLATION (Engines F-2029 THRU F-2042) (See figure 1, index 7, for REQMT)	REF	
			PARTIAL BREAKDOWN FOLLOWS		
- 1	1,2,7,8,9, 10,11,12	RE127-2001-0002	. CLAMP	14	
- 2	12	RE127-2001-0006	. CLAMP	1	
- 3	12	RE127-2001-0010	. CLAMP	1	
- 4	7	RE127-2001-0004	. CLAMP	2	
- 5	2,10	RE127-2001-0014	. CLAMP	2	
- 6	11	RE127-2001-0043	. CLAMP	1	
- 7	2	RE127-2001-0045	. CLAMP	1	
		AN520C10R8	. SCREW (AP)	1	
		AN520C10R16	. SCREW (AP)	1	
		AN520C10R20	. SCREW (AP)	1	
		AN520C10R22	. SCREW (AP)	1	
		AN520C10R26	. SCREW (AP)	1	
		LD153-0010-0007	. WASHER (AP)	1	
		NAS679C3W	. NUT (AP)	1	
- 8	9	NAS43DD3-32	. SPACER	2	
- 9	7	NAS43DD3-48	. SPACER	1	
-10	1	NAS43DD3-56	. SPACER	1	
-10A	2	NAS43DD3-80	. SPACER	1	
		MS9101-05	. BRACKET	1	
		MS9102-05	. BRACKET	11	
		MS9102-51	. BRACKET	4	
		MS9103-24	. BRACKET	1	
		MS9103-51	. BRACKET	1	
		MS9103-14	. BRACKET	2	
		MS9103-16	. BRACKET	1	
		RD111-1009-6506	. BOLT (AP)	1	
		RD111-1011-6407	. BOLT (AP)	1	
		RD153-5002-0005	. WASHER (AP)	1	
		RD153-5002-0004	. WASHER (AP)	1	
-11	11	SF704301	. TUBE ASSY, Static firing instrumentation, KF6b-1 parameter (Replaced by AN814-4JL at KF6b-1 port after static firing on engines incorporating MD102 change) (LC)	1	
		MC124C4W	. . NUT (MFD by 92003)	2	
		MS20819-4J	. . SLEEVE (Replaces MS20819-4C for all applications)	2	
		RD172-0002-0001	. . TAPE (ROCKET FUEL)	AR	
		RD172-0014-C033	. . TAPE (RP-1)	AR	
		RD172-0018-2000	. . TAPE (2000 PSI)	AR	
		SF704301-3	. . TUBE, 304 CRES, 1/4 IN. OD by 0.049 gage by 36.00 IN. LG	1	
-11A	11	AN814-4JL	. PLUG AND BLEEDER (Supersedes AN814-4CL) (Replaces SF704301 at KF6b-1 port and associated hardware after static firing on engines incorporating MD102 change) (LC)	1	
-12	11	VSF1015C4	. SEAL (MFD by 92215) (LC)	2	
-12A	11	AN833-4J	. ELBOW (Supersedes AN833-4C) (LC)	1	
-12B	11	RD262-3001-0004	. GASKET (LC)	1	
-12C	11	RD262-1002-0004	. RING (LC)	1	
-12D	11	RD114-1003-1004	. NUT (LC)	1	
-13	11	AN833-4J	. ELBOW (Supersedes AN833-4C) (LC)	1	
-14	11	RD262-3001-0004	. GASKET (LC)	1	
-14A	11	RD262-1002-0004	. RING (LC)	1	
-14B	11	RD114-1003-1004	. NUT (LC)	1	
-15	11	SF703821	. TRANSDUCER, Simulated, static test (LC)	1	
-16	11	SF703819	. CLAMP, Transducer, static test	1	
		RD111-4010-0416	. BOLT (AP)	2	
		RD111-4008-3424	. BOLT (AP)	2	
		RD153-5002-0004	. WASHER (AP)	4	
-17	11	SF703406-3	. SUPPORT, Cap, 3.50 IN. strut	2	
		RD111-1010-6529	. BOLT (AP)	2	
		RD153-5002-0005	. WASHER (AP)	2	
		RD153-1002-0005	. WASHER (AP)	2	
		RD114-8005-1005	. NUT (AP)	2	
-18	8	SF704323	. TUBE ASSY, Static firing instrumentation, PO2b-1 parameter (Replaced by AN814-4JL at PO2b-1 port after static firing on engines incorporating MD102 change) (LC)	1	
		MC124C4W	. . NUT (MFD by 92003)	2	
		MS20819-4J	. . SLEEVE (Replaces MS20819-4C for all applications)	2	
		RD172-0001-0001	. . TAPE (ROCKET OXIDIZER)	AR	
		RD172-0014-0027	. . TAPE (LIQUID OXYGEN)	AR	
		RD172-0018-2000	. . TAPE (2000 PSI)	AR	
		SF704323-3	. . TUBE, 304 CRES, 1/4 IN. OD by 0.049 gage by 24.00 IN. LG	1	
-18A	8	AN814-4JL	. PLUG AND BLEEDER (Supersedes AN814-4CL) (Replaces SF704323 at PO2b-1 port and associated hardware after static firing on engines incorporating MD102 change) (LC)	1	
-19	8	VSF1015C4	. SEAL (MFD by 92215) (LC)	2	
-20	8	500101C4	. FITTING (MFD by 08193) (LC)	1	

FIG & INDEX NO	ZONE NO	PART NUMBER	DESCRIPTION 1 2 3 4 5 6 7	UNITS PER ASSY	USABLE ON CODE
37-20A	8	500103C4	. BOLT (MFD by 08199) (LC)	1	
-20B	8	12120CR4	. SEAL (MFD by 08199) (LC)	2	
-21	8	DELETED			
-22	8	NA5-24002T2	. FITTING, Orifice (LC)	1	
-23	8	RE261-3004-0004	. SEAL (Interchangeable with 12100CR4 MFD by 08199) (LC)	1	
-24	8	SF703821	. TRANSDUCER, Simulated, static test (LC)	1	
-25	8	SF703819	. CLAMP, Transducer, static test	1	
		RD111-4010-0416	. BOLT (AP)	2	
		RD111-4010-0429	. BOLT (AP)	2	
		RD153-5002-0004	. WASHER (AP)	4	
-26	8	SF704318	. SUPPORT ASSY, Outlet flange, LOX pump, NO. 1 side (Welded)	1	
		NAS1005-7H	. BOLT (AP)	5	
		RD153-5002-0005	. WASHER (AP)	5	
-26A	8	KN428-4	. . INSERT (MFD by 29372)	4	
-27	9	SF704304	. TUBE ASSY, Static firing instrumentation, PO2b-2 parameter (Replaced by AN814-4JL at PO2b-2 port after static firing on engines incorporating MD102 change) (LC)	1	
		MC124C4W	. . NUT (MFD by 92003)	2	
		MS20819-4J	. . SLEEVE (Replaces MS20819-4C for all applications)	2	
		RD172-0001-0001	. . TAPE (ROCKET OXIDIZER)	AR	
		RD172-0014-0027	. . TAPE (LIQUID OXYGEN)	AR	
		RD172-0018-2000	. . TAPE (2000 PSI)	AR	
		SF704304-3	. . TUBE, 304 CRES, 1/4 IN. OD by 0.049 gage by 25.00 IN. LG	1	
-27A	9	AN814-4JL	. PLUG AND BLEEDER (Supersedes AN814-4CL) (Replaces SF704304 at PO2b 2 port and associated hardware after static firing on engines incorporating MD102 change) (LC)	1	
-28	9	VSF1015C4	. SEAL (MFD by 92215) (LC)	2	
-29	9	NA5-24002T2	. FITTING, Orifice (LC)	1	
-30	9	RE261-3004-0004	. SEAL (Interchangeable with 12100CR4 MFD by 08199) (LC)	1	
-31	9	500103C4	. BOLT (MFD by 08199) (LC)	1	
-32	9	500101C4	. FITTING (MFD by 08199) (LC)	1	
-33	9	12120CR4	. SEAL (MFD by 08199) (LC)	2	
-34	9	SF703821	. TRANSDUCER, Simulated, static test (LC)	1	
-35	9	SF703819	. CLAMP, Transducer, static test	1	
		RD111-4010-0416	. BOLT (AP)	2	
		RD111-4008-3424	. BOLT (AP)	2	
		RD153-5002-0004	. WASHER (AP)	4	
-36	9	SF703820	. SUPPORT ASSY, Transducer LOX pump outlet flange (Welded)	1	
		NAS1005-4H	. BOLT (AP)	5	
		RD153-5002-0005	. WASHER (AP)	5	
-36A	9	KNL428-4	. . INSERT (MFD by 29372)	4	
-37	7,8	SF704324	. TUBE ASSY, Static firing instrumentation, PF2b-1 parameter (Replaced by AN814-4JL at PF2b-1 port after static firing on engines incorporating MD102 change) (LC)		
		MC124C4W	. . NUT (MFD by 92003)	2	
		MS20819-4J	. . SLEEVE (Replaces MS20819-4C for all applications)	2	
		RD172-0002-0001	. . TAPE (ROCKET FUEL)	AR	
		RD172-0014-0033	. . TAPE (RP-1)	AR	
		RD172-0018-2500	. . TAPE (2500 PSI)	AR	
		SF704324-3	. . TUBE, 304 CRES, 1/4 IN. OD by 0.049 gage by 17.00 IN. LG	1	
-37A	7	AN814-4JL	. PLUG AND BLEEDER (Supersedes AN814-4CL) (Replaces SF704324 at PF2b-1 port and associated hardware after static firing on engines incorporating MD102 change) (LC)	1	
-38	7,8	VSF1015C4	. SEAL (MFD by 92215) (LC)	2	
-39	7	AN837-4J	. ELBOW (Supersedes AN837-4C) (LC)	1	
-40	7	RD262-3001-0004	. GASKET (LC)	1	
-41	7	MS9058-04	. RING (LC)	1	
-42	7	RD114-1003 1004	. NUT (LC)	1	
-43	8	NA5-24002T2	. FITTING, Orifice (LC)	1	
-44	8	RD262-3001-0004	. GASKET (LC)	1	
-45	8	SF703821	. TRANSDUCER, Simulated, static test (LC)	1	
-46	8	SF703819	. CLAMP, Transducer, static test	1	
		RD111-4010-0416	. BOLT (AP)	2	
		RD111-4008-3424	. BOLT (AP)	2	
		RD153-5002-0004	. WASHER (AP)	4	
-47	8	SF703403-3	. SUPPORT, Cap, fuel duct flange	1	
		NAS1005-7H	. BOLT (AP)	5	
		RD153-5002-0005	. WASHER (AP)	5	
-48	1	SF704306	. TUBE ASSY, Static firing instrumentation, PF2b-2 parameter (Replaced by AN814-4JL at PF2b-2 port after static firing on engines incorporating MD102 change) (LC)	1	
		MC124C4W	. . NUT (MFD by 92003)	2	
		MS20819-4J	. . SLEEVE (Replaces MS20819-4C for all applications)	2	
		RD172-0002-0001	. . TAPE (ROCKET FUEL)	AR	
		RD172-0014-0033	. . TAPE (RP-1)	AR	
		RD172-0018-2500	. . TAPE (2500 PSI)	AR	
		SF704306-3	. . TUBE, 304 CRES, 1/4 IN. OD by 0.049 gage by 19.00 IN. LG	1	

FIG & INDEX NO.	ZONE NO	PART NUMBER	DESCRIPTION 1 2 3 4 5 6 7	UNITS PER ASSY	USABLE ON CODE
37-48A	1	AN814-4JL	. PLUG AND BLEEDER (Supersedes AN814-4CL) (Replaces SF704306 at PF2b-2 port and associated hardware after static firing on engines incorporating MD102 change) (LC)	1	
-49	1	VSF1015C4	. SEAL (MFD by 92215) (LC)	2	
-50	1	AN833-4J	. ELBOW (Supersedes AN833-4C) (LC)	1	
-51	1	RD262-3001-0004	. GASKET (LC)	1	
-52	1	RD262-1002-0004	. RING (LC)	1	
-53	1	RD114-1003-1004	. NUT (LC)	1	
-54	1	NA5-24002T2	. FITTING, Orifice (LC)	1	
-55	1	RD262-3001-0004	. GASKET (LC)	1	
-56	1	SF703821	. TRANSDUCER, Simulated, static test (LC)	1	
-57	1	SF703819	. CLAMP, Transducer, static test	1	
		RD111-4010-0416	. BOLT (AP)	2	
		RD111-4010-0429	. BOLT (AP)	2	
		RD153-5002-0004	. WASHER (AP)	4	
-58	1	SF703403-3	. SUPPORT, Cap, fuel duct flange	1	
		NAS1005-7H	. BOLT (AP)	5	
		RD153-5002-0005	. WASHER (AP)	5	
-59	12	SF704307	. TUBE ASSY, Static firing instrumentation, CG1b parameter (Replaced by AN814-4JL at CG1b port after static firing on engines incorporating MD102 change) (LC)	1	
		MC124C4W	. . NUT (MFD by 92003)	2	
		MS20819-4J	. . SLEEVE (Replaces MS20819-4C for all applications)	2	
		RD172-0002-0001	. . TAPE (ROCKET FUEL)	AR	
		RD172-0014-0006	. . TAPE (COMBUSTION GAS)	AR	
		RD172-0018-2000	. . TAPE (2000 PSI)	AR	
		SF704307-3	. . TUBE, 304 CRES, 1/4 IN. OD by 0.049 gage by 30.00 IN. LG	1	
-59A	12	AN814-4JL	. PLUG AND BLEEDER (Supersedes AN814-4CL) (Replaces SF704307 at CG1b port and associated hardware after static firing for engines incorporating MD102 change) (LC)	1	
-60	12	VSF1015C4	. SEAL (MFD by 92215) (LC)	2	
-61	12	RD273-2004-2004	. UNION (LC)	1	
-62	12	RE261-3004-1004	. SEAL (Interchangeable with 12100AA4 MFD by 08199) (LC)	1	
-63	12	NA5-24002T2	. FITTING, Orifice (LC)	1	
-64	12	RE261-3004-1004	. SEAL (Interchangeable with 12100AA4 MFD by 08199) (LC)	1	
-65	12	SF703821	. TRANSDUCER, Simulated, static test (LC)	1	
-66	12	SF703819	. CLAMP, Transducer, static test	1	
		RD111-4010-0416	. BOLT (AP)	2	
		RD111-4010-0429	. BOLT (AP)	2	
		RD153-5002-0004	. WASHER (AP)	4	
-67	12	SF703403-3	. SUPPORT, Cap, fuel duct flange	1	
		NAS1005-7H	. BOLT (AP)	5	
		RD153-5002-0005	. WASHER (AP)	5	
-68	10	SF704311	. TUBE ASSY, Static firing instrumentation, NH1b parameter (Replaced by AN814-4JL at NH1b port after static firing on engines incorporating MD102 change) (LC)	1	
		MC124C4W	. . NUT (MFD by 92003)	2	
		MS20819-4J	. . SLEEVE (Replaces MS20819-4C for all applications)	2	
		RD172-0006-0001	. . TAPE (HYDRAULIC)	AR	
		RD172-0014-0033	. . TAPE (RP-1)	AR	
		RD172-0018-2500	. . TAPE (2500 PSI)	AR	
		SF704311-3	. . TUBE, 304 CRES, 1/4 IN. OD by 0.049 gage by 28.00 IN. LG	1	
-68A	12	AN814-4JL	. PLUG AND BLEEDER (Supersedes AN814-4CL) (Replaces SF704311 at NH1b port and associated hardware after static firing on engines incorporating MD102 change) (LC)	1	
-69	10	VSF1015C4	. SEAL (MFD by 92215) (LC)	2	
-70	10	AN833-4J	. ELBOW (Supersedes AN833-4C) (LC)	1	
-71	10	RD262-3001-0004	. GASKET (LC)	2	
-72	10	RD262-1002-0004	. RING (LC)	1	
-73	10	RD114-1003-1004	. NUT (LC)	1	
-73A	10	NA5-24002T2	. FITTING, Orifice (LC)	1	
-73B	10	RD262-3001-0004	. GASKET (LC)	1	
-74	10	SF703821	. TRANSDUCER, Simulated, static test (LC)	1	
-75	10	SF703819	. CLAMP, Transducer, static test	1	
		RD111-4010-0416	. BOLT (AP)	2	
		RD111-4008-3424	. BOLT (AP)	2	
		RD153-5002-0004	. WASHER (AP)	4	
-76	10	308228	. STRAP, Strut bracket, pressurization system	1	
-77	10	SF703405-3	. SUPPORT, Cap, 1.00 strut	1	
		RD111-4011-6527	. BOLT (AP)	2	
		RD153-5002-0005	. WASHER (AP)	2	
		RD153-1002-0005	. WASHER (AP)	2	
		RD114-8005-1005	. NUT (AP)	2	

FIG & INDEX NO	ZONE NO.	PART NUMBER	DESCRIPTION 1 2 3 4 5 6 7	UNITS PER ASSY	USABLE ON CODE
37-78	2	SF704321	. TUBE ASSY, Static firing instrumentation, NH3b parameter (Replaced by AN814-4JL at NH3b port after static firing on engines incorporating MD102 change) (LC)	1	
		MC124C4W	. . NUT (MFD by 92003)	2	
		MS20819-4J	. . SLEEVE (Replaces MS20819-4C for all applications)	2	
		RD172-0006-0001	. . TAPE (HYDRAULIC)	AR	
		RD172-0014-0033	. . TAPE (RP-1)	AR	
		RD172-0018-2500	. . TAPE (2500 PSI)	AR	
		SF704321-3	. . TUBE, 304 CRES, 1/4 IN. OD by 0.049 gage by 24.00 IN. LG	1	
-78A	2	AN814-4JL	. PLUG AND BLEEDER (Supersedes AN814-4CL) (Replaces SF704321 at NH3b port and associated hardware after static firing on engines incorporating MD102 change) (LC)	1	
-78B	2	AN833-4J	. ELBOW (Supersedes AN833-4C) (LC)	1	
-78C	2	RD262-3001-0004	. GASKET (LC)	1	
-78D	2	RD262-1002-0004	. RING (LC)	1	
-78E	2	RD114-1003-1004	. NUT (LC)	1	
-79	2	VSF1015C4	. SEAL (MFD by 92215) (LC)	2	
-80		DELETED			
-81		DELETED			
-82	2	NA5-24002T2	. FITTING, Orifice (LC)	1	
-83	2	RD262-3001-0004	. GASKET (LC)	1	
-84	2	SF703821	. TRANSDUCER, Simulated, static test (LC)	1	
-85	1	SF703819	. CLAMP, Transducer, static test	1	
		RD111-4010-0416	. BOLT (AP)	2	
		RD111-4008-3424	. BOLT (AP)	2	
		RD153-5002-0004	. WASHER (AP)	4	
-86	2	308228	. STRAP, Strut bracket, pressurization system	1	
-87	1	SF703405-3	SUPPORT, Cap, 4.00 strut	1	
		RD111-4011-6527	. BOLT (AP)	2	
		RD153-5002-0005	. WASHER (AP)	2	
		RD153-1002-0005	. WASHER (AP)	2	
		RD114-8005-1005	. NUT (AP)	2	
-88	7	SF704319	. TUBE ASSY, Static firing instrumentation, LB1b parameter (Replaced by AN814-4JL at LB1b port after static firing on engines incorporating MD102 change) (LC)	1	
		MC124C4W	. . NUT (MFD by 92003)	2	
		MS20819-4J	. . SLEEVE (Replaces MS20819-4C for all applications)	2	
		RD172-0005-0001	. . TAPE (LUBRICATION)	AR	
		RD172-0014-0033	. . TAPE (RP-1)	AR	
		RD172-0018-1000	. . TAPE (1000 PSI)	AR	
		SF704319-3	. . TUBE, 304 CRES, 1/4 IN. OD by 0.049 gage by 24.00 IN. LG	1	
-88A	7	AN814-4JL	. PLUG AND BLEEDER (Supersedes AN814-4CL) (Replaces SF704319 at LB1b port and associated hardware after static firing on engines incorporating MD102 change) (LC)	1	
-89	7	VSF1015C4	. SEAL (MFD by 92215) (LC)	2	
-90	7	AN833-4J	. ELBOW (Supersedes AN833-4C) (LC)	1	
-91	7	RD262-3001-0004	. GASKET (LC)	1	
-92	7	RD262-1002-0004	. RING (LC)	1	
-93	7	RD114-1003-1004	. NUT (LC)	1	
-94	7	NA5-24002T2	. FITTING, Orifice (LC)	1	
-95	7	RD262-3001-0004	. GASKET (LC)	1	
-96	7	SF703821	. TRANSDUCER, Simulated, static (LC)	1	
-97	7	SF703819	. CLAMP, Transducer, static test	1	
		NAS1004-31A	. BOLT (AP)	2	
		NAS1004-15A	. BOLT (AP)	2	
		RD153-5002-0004	. WASHER (AP)	4	
		MS15795-810	. WASHER (AP)	4	
		RD153-1002-0004	. WASHER (AP)	4	
		NA5679C4W	. NUT (AP)	4	
-98	7	SF703825	. SUPPORT, Fuel pump outlet flange, NO. 1 side	1	
		NAS1005-7H	. BOLT (AP)	5	
		RD153-5002-0005	. WASHER (AP)	5	
		MS15795-812	. WASHER (AP)	5	
-99 THRU -107		DELETED			
-108	1	SF704316	. TUBE ASSY, Static firing instrumentation, PF10 parameter (Replaced by AN814-4JL at PF10 port after static firing on engines incorporating MD102 change) (LC)	1	
		MC124C4W	. . NUT (MFD by 92003)	2	
		MS20819-4J	. . SLEEVE (Replaces MS20819-4C for all applications)	2	
		RD172-0002-0001	. . TAPE (ROCKET FUEL)	AR	
		RD172-0014-0033	. . TAPE (RP-1)	AR	
		RD172-0018-2000	. . TAPE (2000 PSI)	AR	
		SF704316-3	. . TUBE, 304 CRES, 1/4 IN. OD by 0.049 gage by 28.00 IN. LG	1	

FIG & INDEX NO	ZONE NO.	PART NUMBER	DESCRIPTION 1 2 3 4 5 6 7	UNITS PER ASSY.	USABLE ON CODE
37-108A	1	AN814-4JL	. PLUG AND BLEEDER (Supersedes AN814-4CL) (Replaces SF704316 at PF10 port and associated hardware after static firing on engines incorporating MD102 change) (LC)	1	
-109	1	VSF1015C4	. SEAL (MFD by 92315) (LC)	2	
-110	1	RD273-2004-2004	. UNION (LC)	1	
-111	1	RD262-3001-0004	. GASKET (LC)	1	
-112	1	NA5-24002T2	. FITTING, Orifice (LC)	1	
-113	1	RD262-3001-0004	. GASKET (LC)	1	
-114	1	SF703831	. TRANSDUCER, Simulated, static test (LC)	1	
-115	1	SF703819	. CLAMP, Transducer, static test	1	
		NAS1004-31A	. BOLT (AP)	2	
		NAS1004-15A	. BOLT (AP)	2	
		RD153-5002-0004	. WASHER (AP)	4	
		MS15795-810	. WASHER (AP)	4	
		RD153-1002-0004	. WASHER (AP)	4	
		NAS679C4W	. NUT (AP)	4	
-116	1	SF703825	. SUPPORT, Fuel pump, outlet flange, NO. 1 side	1	
		NAS1005-7H	. BOLT (AP)	5	
		MS15795-812	. WASHER (AP)	5	
		RD153-5002-0005	. WASHER (AP)	5	
-117	12	602102	TUBE ASSY, Sequence valve to gas generator, open (Welded) (NHA 601601) (Gas generator ball valve open tube) (LC)	REF	
-118	12	602089	TUBE ASSY, System close (Welded) (NHA 601601)(Propellant valves close tube) (LC)	REF	
-119	7	408840	TUBE ASSY, Nitrogen purge, overboard drain (NHA 407001) (LC)	REF	
-120	7	404913	ELBOW ASSY, Fuel inlet, NO. 1 (NHA 407001) (LC)	REF	
-121	2,3	602088	TUBE ASSY, System open (Welded) (NHA 601601) (Propellant valves open tube) (LC)	REF	
-122	1,3	408818	DUCT ASSY, Fuel NO. 2, high pressure (NHA 407001) (LC)	REF	
-123	3,10	406072	DUCT ASSY, Hydraulic return, customer connect (Welded) (Hydraulic return wrap-around duct) (LC)	REF	
		SF703401	STATIC FIRING INSTRUMENTATION INSTL (Continued for engines F-2043 THRU F-2098) (See figure 35)	REF	

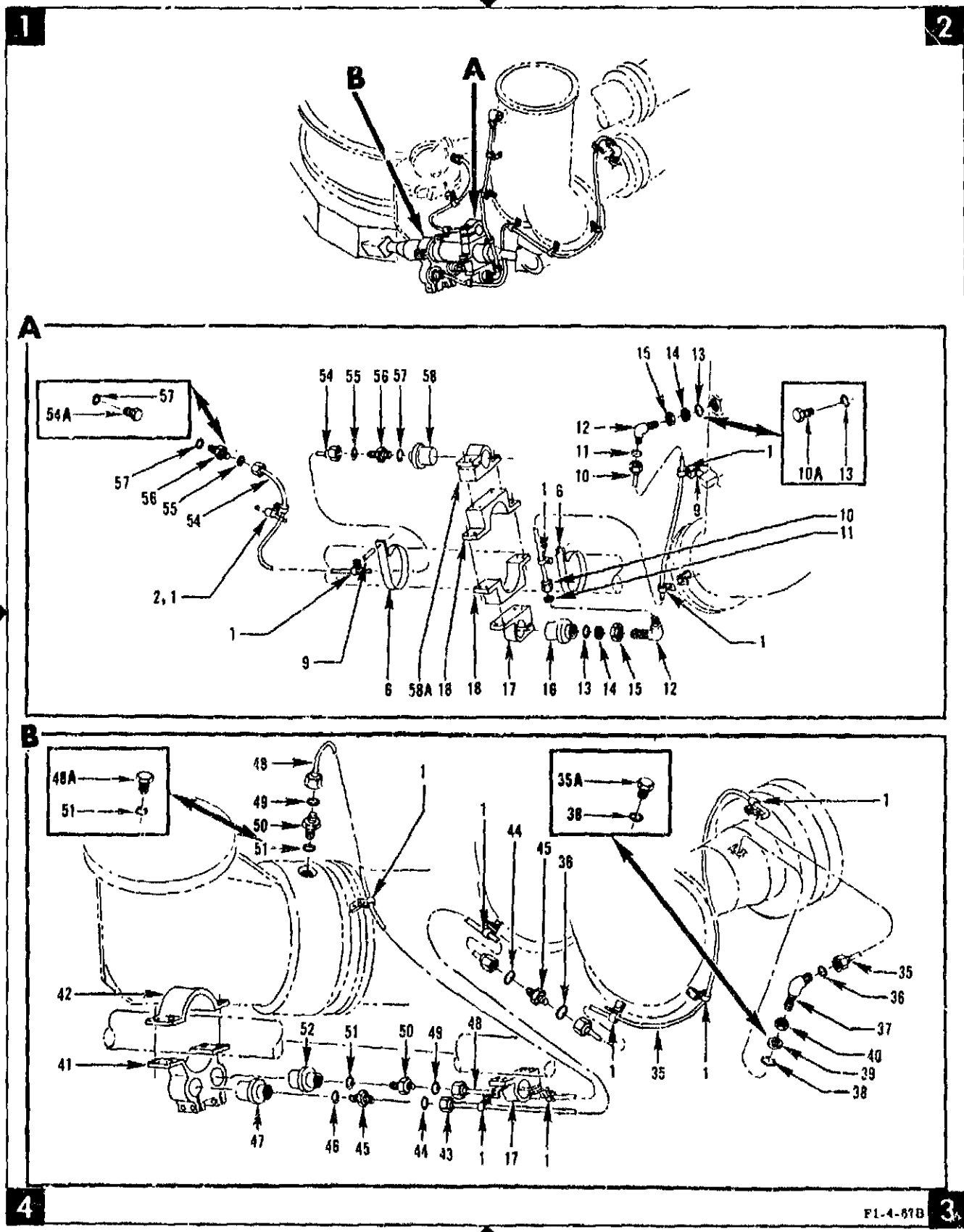

Figure 38. Static-Firing Instrumentation Installation (Engines F-2043 Through F-2098) (Sheet 1 of 5)

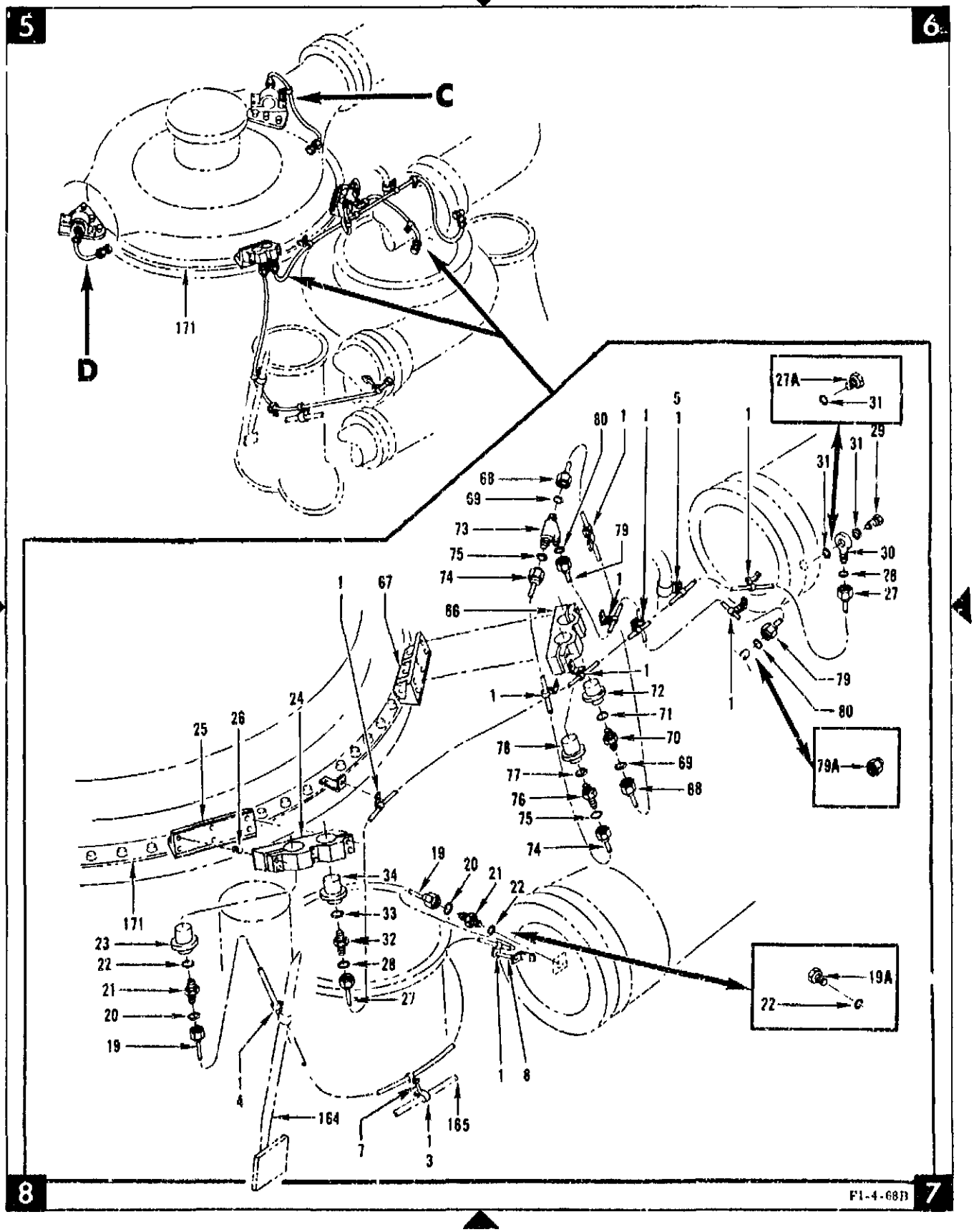

Figure 38. Static-Firing Instrumentation Installation (Engines F-2043 Through F-2098) (Sheet 2 of 5)

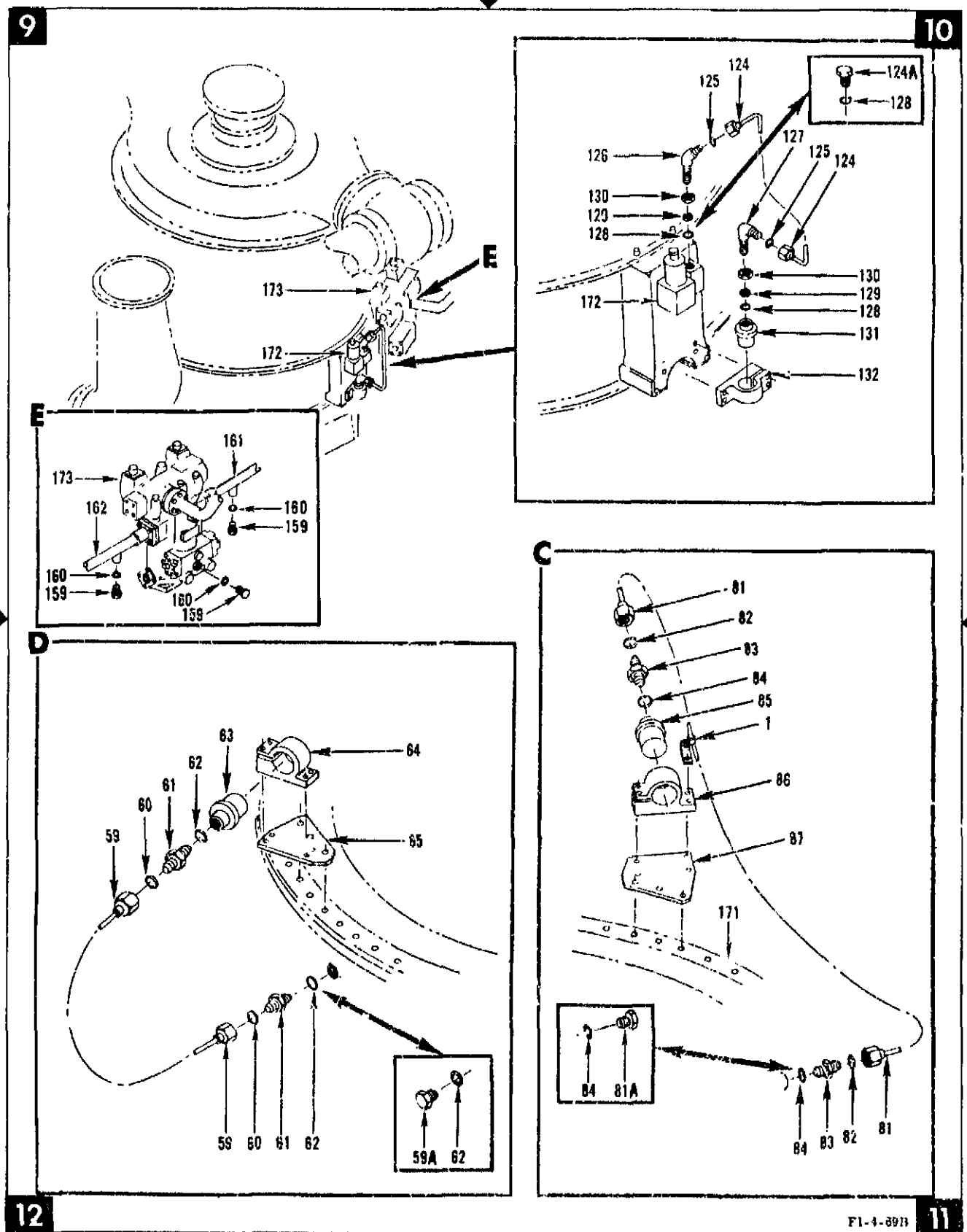

Figure 38. Static-Firing Instrumentation Installation (Engines F-2043 Through F-2098) (Sheet 3 of 5)

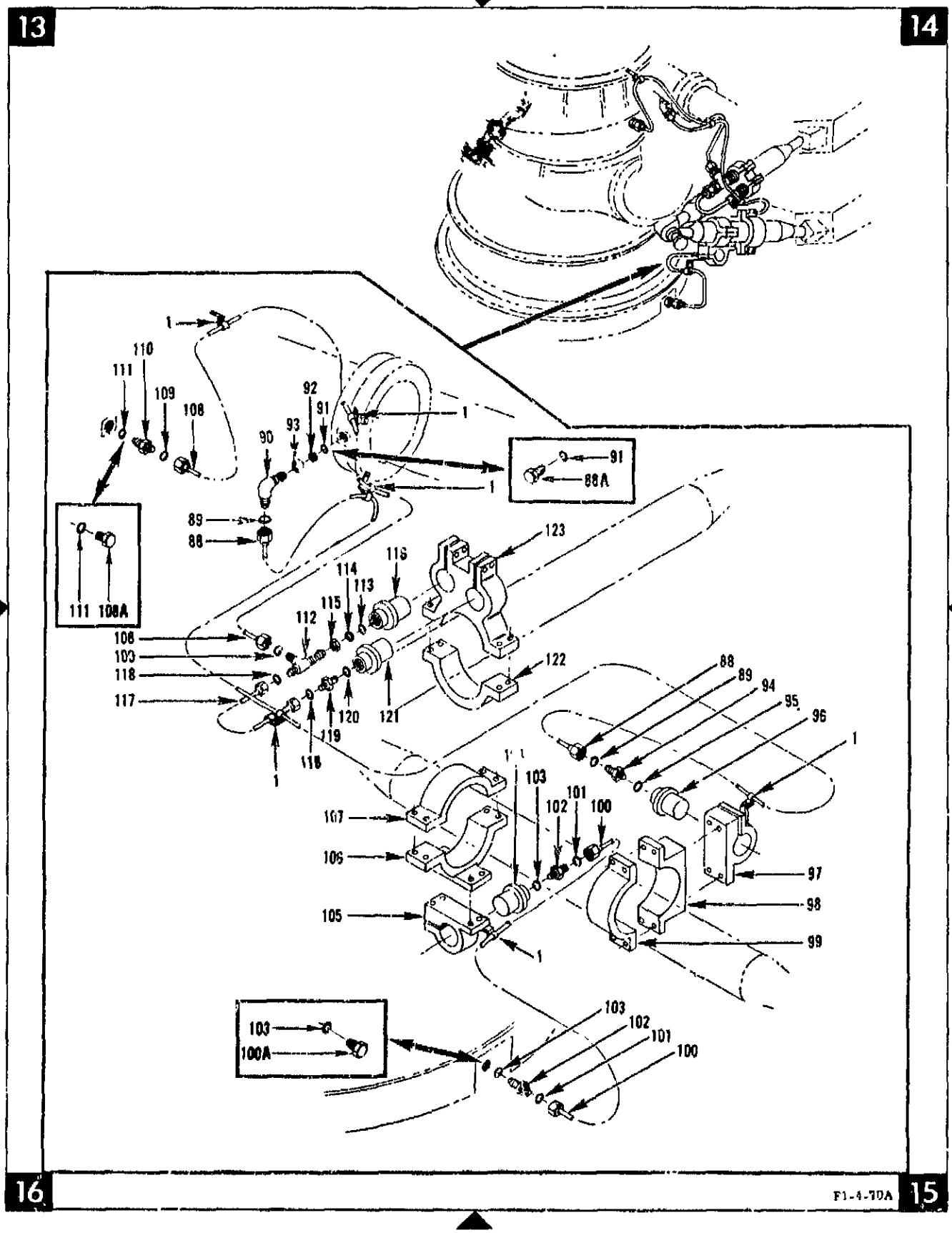

Figure 38. Static-Firing Instrumentation Installation (Engines F-2043 Through F-2098) (Sheet 4 of 5)

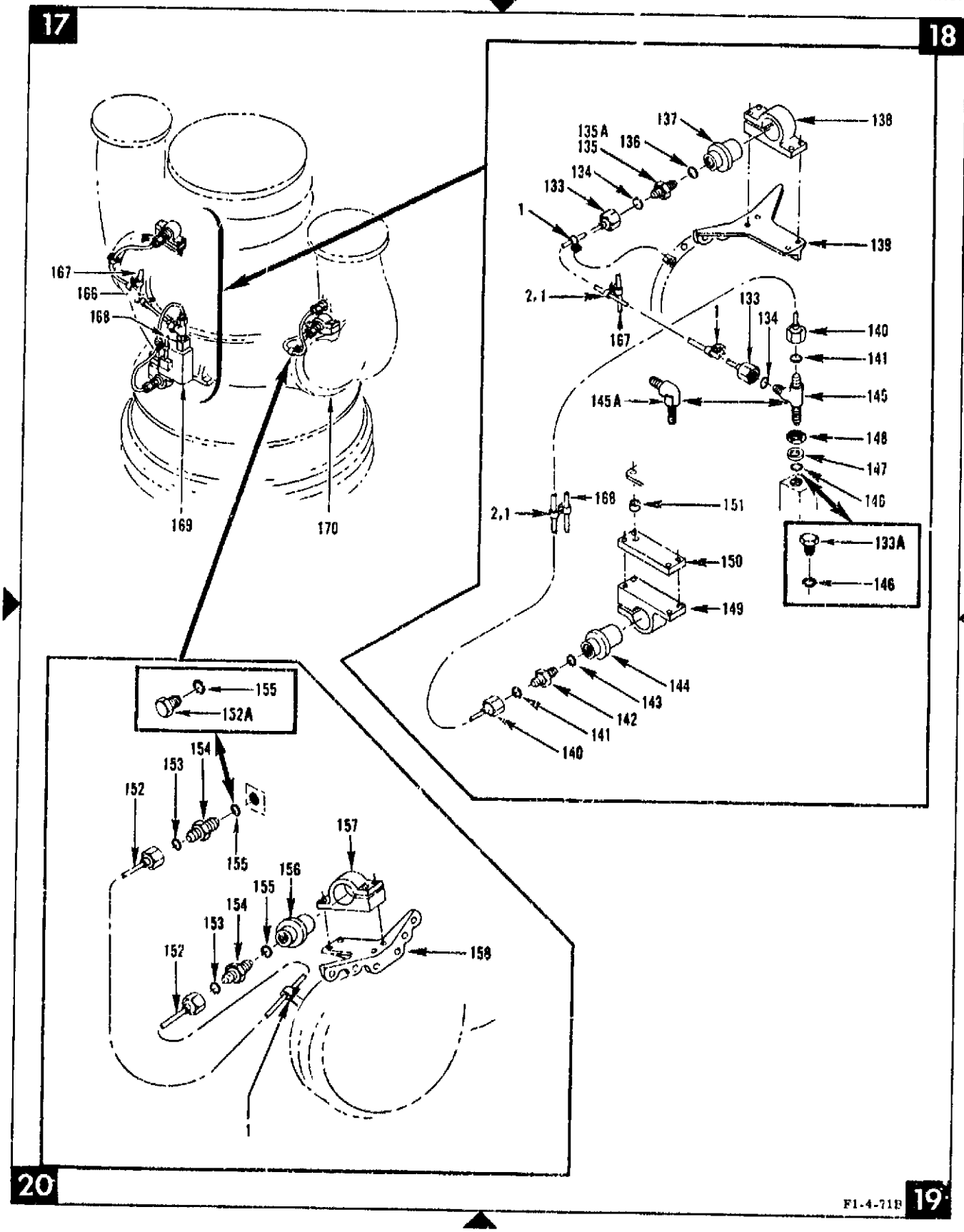

Figure 38. Static-Firirg Instrumentation Installation (Engines F-2043 Through F-2098) (Sheet 5 of 5)

FIG & INDEX NO	ZONE NO	PART NUMBER	DESCRIPTION 1 2 3 4 5 6 7	UNITS PER ASSY	USABLE ON CODE
38-		SF703401	STATIC FIRING INSTRUMENTATION INSTL (See figure 1, index 7, for REQMT) . . . (Engines F-2043 THRU F-2045 and F-2047 incorporating MD151 change) (Engines F-2046 and F-2048 THRU F-2098 incorporating MD150 change)	REF	
- 1	1 THRU 8, 11, 13 THRU 16, 18, 29	RE127-2001-0002	. CLAMP	37	
- 2	2, 18	RE127-2001-0004	. CLAMP	3	
- 3	8	RE127-2001-0006	. CLAMP	1	
- 4	6	RE127-2001-0007	. CLAMP	1	
- 5	6	RE127-2001-0014	. CLAMP	1	
- 6	2, 4	RE127-2001-0043	. CLAMP	2	
		AN520C10R8	. SCREW (AP)	1	
		AN520C10R10	. SCREW (AP)	1	
		AN520C10R14	. SCREW (AP)	1	
		AN520C10R16	. SCREW (AP)	1	
		AN520C10R26	. SCREW (AP)	1	
		LD153-0010-0007	. WASHER (AP)	1	
		LD153-0010-0008	. WASHER (AP)	1	
		NAS679C3W	. NUT (AP)	1	
- 7	8	NAS43DD3-16	. SPACER	1	
- 8	7	NAS43DD3-32	. SPACER	1	
- 9	4	NAS43DD3-56	. SPACER	1	
		MS9101-05	. BRACKET	4	
		MS9102-02	. BRACKET	2	
		MS9102-05	. BRACKET	1	
		MS9102-15	. BRACKET	4	
		MS9102-30	. BRACKET	1	
		MS9102-40	. BRACKET	2	
		MS9102-51	. BRACKET	3	
		MS9103-14	. BRACKET	3	
		MS9103-16	. BRACKET	1	
		MS9103-24	. BRACKET	1	
		MS9103-01	. BRACKET	1	
		MS9104-11	. BRACKET	2	
		MS9104-36	. BRACKET	1	
		RD111-1009-0304	. BOLT (AP)	1	
		RD111-1009-6506	. BOLT (AP)	1	
		RD111-1011-6407	. BOLT (AP)	1	
		RD111-4010-0408	. BOLT (AP)	1	
		RD111-4010-0506	. BOLT (AP)	1	
		RD111-4010-6608	. BOLT (AP)	1	
		NAS1101C3H6	. SCREW (AP)	1	
		PD153-5002-0003	. WASHER (AP)	1	
		RD153-5002-0004	. WASHER (AP)	1	
		RD153-5002-0005	. WASHER (AP)	1	
		RD153-5002-0006	. WASHER (AP)	1	
		LD153-0010-0007	. WASHER (AP)	1	
-10	2	SF704301-11	. TUBE ASSY, Static firing instrumentation, KFOb-1 parameter (Replaced by AN814-4JL at KFOb-1 port after static firing on engines incorporating MD102, MD103 and MD166 changes) (LC)	1	EMA
		MC124C4W	. . NUT (MFD by 02003)	2	
		MS20819-4J	. . SLEEVE (Replaces MS20819-4C for all applications)	2	
		RD172-0002-0001	. . TAPE (ROCKET FUEL)	AR	
		RD172-0014-0033	. . TAPE (RP-1)	AR	
		RD172-0018-2000	. . TAPE (2000 PSI)	AR	
		SF704301-5	. . TUBE, 304 CRES, 1/4 IN. OD by 0.049 gage by 36.00 IN. LG	1	
-10A	2	AN814-4JL	. PLUG AND BLEEDER (Supersedes AN814-4CL) (Replaces SF704301-11 at KFOb-1 port and associated hardware after static firing on engines incorporating MD102, MD103, and MD166 changes) (LC)	1	
-11	2	VSF1015C4	. SEAL (MFD by 92215) (LC)	2	
-12	2, 3	AN833-4J	. ELBOW (Supersedes AN833-4C) (LC)	2	
-13	2, 3	RD262-3001-0004	. GASKET (LC)	2	
-14	2, 3	RD262-1002-0004	. RING (LC)	2	
-15	2, 3	RD114-1004-1001	. NUT (LC)	2	
-16	3	SF703821	. TRANSDUCER, Simulated, static test (LC)	1	
-17	3	SF703819	. CLAMP, Transducer, static test	1	
		PD111-4010-0410	. BOLT (AP)	2	
		RD111-4010-0429	. BOLT (AP)	1	
		RD111-4008-3424	. BOLT (AP)	2	
		RD153-5002-0004	. WASHER (AP)	4	
-18	4	SF703406-3	. SUPPORT, Cap strut	2	
		RD111-1010-6529	. BOLT (AP)	2	
		RD153-5002-0005	. WASHER (AP)	2	
		RD153-1002-0005	. WASHER (AP)	2	
		RD114-8005-1005	. NUT (AP)	2	

FIG. & INDEX NO	ZONE NO	PART NUMBER	DESCRIPTION 1 2 3 4 5 6 7	UNITS PER ASSY	USABLE ON CODE
38-19	8	SF704323-11	. TUBE ASSY, Static firing instrumentation, PO2b-1 parameter (Replaced by AN814-4JL at PO2b-1 port after static firing on engines incorporating MD102, MD103, and MD166 changes) (LC)	1	
		MC124C4W	. . NUT (MFD by 92003)	2	
		MS20819-4J	. . SLEEVE (Replaces MS20819-4C for all applications)	2	
		RD172-0001-0001	. . TAPE (ROCKET OXIDIZER)	AR	
		RD172-0014-0027	. . TAPE (LIQUID OXYGEN)	AR	
		RD172-0018-2000	. . TAPE (2000 PSI)	AR	
		SF704323-5	. . TUBE, 304 CRES, 1/4 IN. OD by 0.049 gage by 30.00 IN. LG	1	
-19A	7	AN814-4JL	. PLUG AND BLEEDER (Supersedes AN814-4CL) (Replaces SF704323-11 at PO2b-1 port and associated hardware after static firing on engines incorporating MD102, MD103, and MD166 changes) (LC)	1	
-20	8	VSF1015C4	. SEAL (MFD by 92215) (LC)	2	
-21	7, 8	RD273-2004-2004	. UNION (LC)	2	
-22	7, 8	RE261-3004-0004	. SEAL (Interchangeable with 12100CR4 MFD by 08199) (LC)	2	
-23	8	SF703821	. TRANSDUCER, Simulated, static test (LC)	1	
-24	8	SF703810	. CLAMP, Dual transducer mount	1	
		RD111-4010-6428	. BOLT (AP)	4	
		RD111-4010-6430	. BOLT (AP)	2	
		RD153-5002-0004	. WASHER (AP)	2	
-25	8	SF703609	. BRACKET ASSY, Dome transducer mount	1	
		RD111-4008-0608	. BOLT (AP)	3	
		RD153-5002-0006	. WASHER (AP)	3	
-26	8	KN426T6SP	. . INSERT (MFD by 29372)	6	
-27	6, 8	SF701304-11	. TUBE ASSY, Static firing instrumentation, PO2b-2 parameter (Replaced by AN814-4JL at PO2b-2 port after static firing on engines incorporating MD102, MD103, and MD166 changes) (LC)	1	
		MC124C4W	. . NUT (MFD by 92003)	2	
		MS20819-4J	. . SLEEVE (Replaces MS20819-4C for all applications)	2	
		RD172-0001-0001	. . TAPE (ROCKET OXIDIZER)	AR	
		RD172-0014-0027	. . TAPE (LIQUID OXYGEN)	AR	
		RD172-0018-2000	. . TAPE (2000 PSI)	AR	
		SF704304-5	. . TUBE, 304 CRES, 1/4 IN. OD by 0.049 gage by 26.00 IN. LG	1	
-27A	6	AN814-4JL	. PLUG AND BLEEDER (Supersedes AN814-4CL) (Replaces SF704304-11 at PO2b-2 port and associated hardware after static firing on engines incorporating MD102, MD103, and MD166 changes) (LC)	1	
-28	6, 8	VSF1015C4	. SEAL (MFD by 92215) (LC)	2	
-29	6	500103C4	. BOLT (MFD by 08199) (LC)	1	
-30	6	500101C4	. FITTING (MFD by 08199) (LC)	1	
-31	6	12120CR4	. SEAL (MFD by 08199) (LC)	2	
-32	6	RD273-2004-2004	. UNION (LC)	1	
-33	6	RE261-3004-0004	. SEAL (Interchangeable with 12100CR4 MFD by 08199) (LC)	1	
-34	6	SF703821	. TRANSDUCER, Simulated static test (LC)	1	
-35	3	SF704324-11	. TUBE ASSY, Static firing instrumentation, PF2b-1 parameter (Replaced by AN814-4JL at PF2b-1 port after static firing on engines incorporating MD102, MD103, and MD166 changes) (LC)	1	
		MC124C4W	. . NUT (MFD by 92003)	2	
		MS20819-4J	. . SLEEVE (Replaces MS20819-4C for all applications)	2	
		RD172-0002-0001	. . TAPE (ROCKET FUEL)	AR	
		RD172-0014-0033	. . TAPE (RP-1)	AR	
		RD172-0018-2500	. . TAPE (2500 PSI)	AR	
		SF704324-5	. . TUBE, 304 CRES, 1/4 IN. OD by 0.049 gage by 18.00 IN. LG	1	
-35A	3	AN814-4JL	. PLUG AND BLEEDER (Supersedes AN814-4CL) (Replaces SF704324-11 at PF2b-1 port and associated hardware after static firing on engines incorporating MD102, MD103, and MD166 changes) (LC)	1	
-36	3	VSF1015C4	. SEAL (MFD by 92215) (LC)	1	
-37	3	AN833-4J	. ELBOW (Supersedes AN833-4C) (LC)	2	
-38	3	RD262-3001-0004	. GASKET (LC)	1	
-39	3	RD262-1002-0004	. RING (LC)	1	
-40	3	RD114-1003-1004	. NUT (LC)	1	
-41	4	SF703611	. CLAMP, Dual transducer, 3.50 strut	1	
		RD111-4011-6428	. BOLT (AP)	4	
		RD153-5002-0001	. WASHER (AP)	4	
		RD153-1002-0004	. WASHER (AP)	4	
		RD114-8003-1004	. NUT (AP)	4	
-42	4	SF703612	. SUPPORT, Cap 3.50 strut	1	
		RD111-4011-6428	. BOLT (AP)	4	
		RD153-5002-0004	. WASHER (AP)	4	
		RD153-1002-0004	. WASHER (AP)	4	
		RD114-8003-1004	. NUT (AP)	4	
-43	4	SF704324-31	. TUBE ASSY, Static firing instrumentation (See SF704324-11 for parameter) (LC)	1	
		MC124C4W	. . NUT (MFD by 92003)	2	
		MS20819-4J	. . SLEEVE (Replaces MS20819-4C for all applications)	2	
		RD172-0002-0001	. . TAPE (ROCKET FUEL)	AR	
		RD172-0014-0033	. . TAPE (RP-1)	AR	
		RD172-0018-2500	. . TAPE (2500 PSI)	AR	
		SF704324-7	. . TUBE, 304 CRES 1/4 IN. OD by 0.049 gage by 8.00 IN. LG	1	

FIG. & INDEX NO	ZONE NO	PART NUMBER	1 2 3 4 5 6 7 DESCRIPTION	UNITS PER ASSY	USABLE ON CODE
38-44	3,4	VSF1015C4	. SEAL (MFD by 92215) (LC)	2	
-45	3,4	RD273-2004-2004	. UNION (LC)	2	
-46	4	RD262-3001-0004	. SEAL (LC)	1	
-47	4	SF703821	. TRANSDUCER, Simulated, static test	1	
-48	4	SF703607	. TUBE ASSY, Static firing instrumentation, GG2a parameter (Replaced by AN814-4JL at GG2a port after static firing on engines incorporating MD102, MD103, and MD166 changes) (LC)	1	
		MC124C4W	. . NUT (MFD by 92003)	2	
		MS20819-4J	. . SLEEVE (Replaces MS20819-4C for all applications)	2	
		RD172-0007-0001	. . TAPE (COMPRESSED GAS)	AR	
		RD172-0014-0006	. . TAPE (COMBUSTION GAS)	AR	
		RD172-0018-1500	. . TAPE (1500 PSI)	AR	
		SF703607-3	. TUBE, 304 CRES, 1/4 IN. OD by 0.049 gage by 50.00 IN. LG	1	
-48A	4	AN814-4JL	. PLUG AND BLEEDER (Supersedes AN814-4CL) (Replaces SF703607-3) GG2a port and associated hardware after static firing on engines incorporating MD102, MD103, and MD166 changes) (LC)	1	
-49	4	VSF1015C4	. SEAL (MFD by 92215) (LC)	2	
-50	4	RD273-2004-2004	. UNION (LC)	2	
-51	4	RE261-3004-1004	. SEAL (Interchangeable with 12100AA4 MFD by 08199) (LC)	2	
-52	4	SF703821	. TRANSDUCER, Simulated, static test (LC)	1	
-53	4	SF703819	. CLAMP, Transducer, static test	1	
		RD111-4010-0416	. BOLT (AP)	2	
		RD111-4008-3424	. BOLT (AP)	2	
		RD153-5002-0004	. WASHER (AP)	4	
-54	1	SF704309-11	. TUBE ASSY, Static firing instrumentation, CG1b parameter (Replaced by AN814-4JL at CG1b port after static firing on engines incorporating MD102, MD103, and MD166 changes) (LC)	1	EMA
		MC124C4W	. . NUT (MFD by 92003)	2	
		MS20819-4J	. . SLEEVE (Replaces MS20819-4C for all applications)	2	
		RD172-0007-0001	. . TAPE (COMPRESSED GAS)	AR	
		RD172-0014-0006	. . TAPE (COMBUSTION GAS)	AR	
		RD172-0018-1500	. . TAPE (1500 PSI)	AR	
		SF704309-5	. . TUBE, 304 CRES, 1/4 IN. OD by 0.049 gage by 27.00 IN. LG	1	
-54A	1	AN814-4JL	. PLUG AND BLEEDER (Supersedes AN814-4CL) (Replaces SF704309-11) CG1b port and associated hardware after static firing on engines incorporating MD102, MD103, and MD166 changes) (LC)	1	
-55	1	VSF1015C4	. SEAL (MFD by 92215) (LC)	2	
-56	1	RD273-2004-2004	. UNION (LC)	2	
-57	1	RE261-3004-1004	. SEAL (Interchangeable with 12100AA4 MFD by 08199) (LC)	2	
-58	1	SF703821	. TRANSDUCER, Simulated, static test (LC)	1	
-58A	4	SF703819	. CLAMP, Transducer, static test	1	
		RD111-4010-0416	. BOLT (AP)	2	
		RD111-4008-3424	. BOLT (AP)	2	
		RD153-5002-0004	. WASHER (AP)	4	
-59	12	SF704307-11	. TUBE ASSY, Static firing instrumentation, CG1b parameter (Replaced by AN814-4JL at CG1b port after static firing on engines incorporating MD102, MD103, and MD166 changes) (LC)	1	
		MC124C4W	. . NUT (MFD by 92003)	2	
		MS20819-4J	. . SLEEVE (Replaces MS20819-4C for all applications)	2	
		RD172-0007-0001	. . TAPE (COMPRESSED GAS)	AR	
		RD172-0014-0006	. . TAPE (COMBUSTION GAS)	AR	
		RD172-0018-2000	. . TAPE (2000 PSI)	AR	
		SF704307-5	. . TUBE, 304 CRES, 1/4 IN. OD by 0.049 gage by 18.00 IN. LG	1	
-59A	12	AN814-4JL	. PLUG AND BLEEDERS (Supersedes AN814-4CL) (Replaces SF704307-11 at CG1b port and associated hardware after static firing on engines incorporating MD102, MD103, and MD166 changes) (LC)	1	
-60	12	VSF1015C4	. SEAL (MFD by 92215) (LC)	2	
-61	12	RD273-2004-2004	. UNION (LC)	2	
-62	12	RE261-3004-1004	. SEAL (Interchangeable with 12100AA4 MFD by 08199) (LC)	2	
-63	12	SF703821	. TRANSDUCER, Simulated, static test (LC)	1	
-64	12	SF703819	. CLAMP, Transducer, static test	1	
		RD111-4010-0429	. BOLT (AP)	2	
		RD111-4010-0416	. BOLT (AP)	2	
		RD153-5002-0004	. WASHER (AP)	4	
-65	12	SF703413-3	. SUPPORT, Cap dome	1	
		RD111-4010-0613	. BOLT (AP)	3	
		RD153-5002-0006	. WASHER (AP)	3	
-66	8	SF703610	. CLAMP, Dual Transducer mount	1	
		RD111-4010-0429	. BOLT (AP)	4	
		RD111-4010-0430	. BOLT (AP)	2	
		RD153-5002-0004	. WASHER (AP)	6	
-67	5	SF703609	. BRACKET ASSY, Dome transducer mount	1	
		RD111-4008-0608	. BOLT (AP)	3	
		RD153-5002-0006	. WASHER (AP)	3	

FIG & INDEX NO	ZONE NO	PART NUMBER	DESCRIPTION 1 2 3 4 5 6 7	UNITS PER ASSY	USABLE ON CODE
38-68	6, 7	SF703702	. TUBE ASSY, Static firing instrumentation, PO7b redundant (LC)	1	
		MC124C4W	. . NUT (MFD by 92003)	2	
		MS20819-4J	. . SLEEVE (Replaces MS20819-4C for all applications)	2	
		RD172-0001-0001	. . TAPE (ROCKET OXIDIZER)	AR	
		RD172-0014-0027	. . TAPE (LIQUID OXYGEN)	AR	
		RD172-0018-0025	. . TAPE (25 PSI)	AR	
		SF703602-3	. TUBE, 304 CRES 1/4 IN OD by 0.049 gage by 18.00 IN. LG	1	
-69	5, 7	VSF1015C4	. SEAL (MFD by 92215) (LC)	2	
-70	7	RD273-2004-2004	. UNION (LC)	1	
-71	7	RE261-3004-0004	. SEAL (Interchangeable with 12100CR4 MFD by 08199) (LC)	1	
-72	7	SF703821	. TRANSDUCER, Simulated, static test (LC)	1	
-73	5	AN824-4J	. TEE (Supersedes AN824-4C) (LC)	1	
-74	5, 7	SF703601	. TUBE ASSY, Static firing instrumentation, PO7b parameter (LC)	1	
		MC124C4W	. . NUT (MFD by 92003)	2	
		MS20819-4J	. . SLEEVE (Replaces MS20819-4C for all applications)	2	
		RD172-0001-0001	. . TAPE (ROCKET OXIDIZER)	AR	
		RD172-0014-0027	. . TAPE (LIQUID OXYGEN)	AR	
		RD172-0018-0025	. . TAPE (25 PSI)	AR	
		SF703601-3	. . TUBE, 304 CRES, 1/4 IN. OD by 0.049 gage by 18.00 IN. LG	1	
-75	5, 7	VSF1015C4	. SEAL (MFD by 92215) (LC)	2	
-76	7	RD273-2004-2004	. UNION (LC)	1	
-77	7	RE261-3004-0004	. SEAL (Interchangeable with 12100CR4 MFD by 08199) (LC)	1	
-78	7	SF703821	. TRANSDUCER, Simulated, static test (LC)	1	
-79	6, 7	SF704322-11	. TUBE ASSY, Static firing instrumentation, PO7b parameter (Replaced by AN929-4C at PO7b port after static firing on engines incorporating MD103 change only)	1	
		MC124C4W	. . NUT (MFD by 92003)	2	
		MS20819-4J	. . SLEEVE (Replaces MS20819-4C for all applications)	2	
		RD172-0001-0001	. . TAPE (ROCKET OXIDIZER)	AR	
		RD172-0014-0027	. . TAPE (LIQUID OXYGEN)	AR	
		RD172-0018-0025	. . TAPE (25 PSI)	AR	
		SF704322-5	. TUBE, 304 CRES, 1/4 IN. OD by 0.049 gage by 10.00 IN. LG	1	
-79A	7	AN929-4C	. CAP ASSY (Replaces SF704322-11 at PO7b port after static firing on engines incorporating MD103 change only) (LC)	1	
-80	6, 7	VSF1015C4	. SEAL (MFD by 92215) (LC)	2	
-81	10, 11	SF704308-11	. TUBE ASSY, Static firing instrumentation, CG1d parameter (Replaced by AN814-4JL at CG1d port after static firing on engines incorporating MD102, MD103, and MD166 changes) (LC)	1	
		MC124C4W	. . NUT (MFD by 92003)	2	
		MS20819-4J	. . SLEEVE (Replaces MS20819-4C for all applications)	2	
		RD172-0007-0001	. . TAPE (COMPRESSED GAS)	AR	
		RD172-0014-0006	. . TAPE (COMBUSTION GAS)	AR	
		RD172-0018-1500	. . TAPE (1500 PSI)	AR	
		SF704308-5	. . TUBE, 304 CRES, 1/4 IN. OD by 0.049 gage by 20.00 IN. LG	1	
-81A	11	AN814-4JL	. PLUG AND BLEEDER (Supersedes AN814-4CL) (Replaces SF704308-11 at CG1d port and associated hardware after static firing on engines incorporating MD102, MD103, and MD166 changes) (LC)	1	
-82	10, 11	VSF1015C4	. SEAL (MFD by 92215) (LC)	2	
-83	11	RD273-2004-2004	. UNION (LC)	2	
-84	11	RE261-3004-1004	. SEAL (Interchangeable with 12100AA4 MFD by 08199) (LC)	2	
-85	11	SF703821	. TRANSDUCER, Simulated, static test (LC)	1	
-86	11	SF703819	. CLAMP, Transducer, static test	1	
		RD111-4010-0429	. BOLT (AP)	2	
		RD111-4010-0416	. BOLT (AP)	2	
		RD153-5002-0004	. WASHER (AP)	4	
-87	11	SF703413-3	. SUPPORT, Cap dome	1	
		RD111-4010-0613	. BOLT (AP)	3	
		RD153-5002-0006	. WASHER (AP)	3	
-88	13, 15	SF704308-11	. TUBE ASSY, Static firing instrumentation, PF2b-2 parameter (Replaced by AN814-4JL at PF2b-2 port after static firing on engines incorporating MD102, MD103, and MD166 changes) (LC)	1	
		MC124C4W	. . NUT (MFD by 92003)	2	
		MS20819-4J	. . SLEEVE (Replaces MS20819-4C for all applications)	2	
		RD172-0002-0001	. . TAPE (ROCKET FUEL)	AR	
		RD172-0014-0033	. . TAPE (RP-1)	AR	
		RD172-0018-2500	. . TAPE (2500 PSI)	AR	
		SF704308-5	. . TUBE, 304 CRES 1/4 IN. OD by 0.041 gage by 20.00 IN. LG	1	
-88A	14	AN814-4JL	. PLUG AND BLEEDER (Supersedes AN814-4CL) (Replaces SF704308-11 at PF2b-2 port and associated hardware after static firing on engines incorporating MD102, MD103, and MD166 changes) (LC)	1	
-89	13, 15	VSF1015C4	. SEAL (MFD by 92215) (LC)	2	
-90	13	AN833-4J	. ELBOW (Supersedes AN833-4C) (LC)	1	
-91	14	RD262-3001-0004	. GASKET (LC)	1	
-92	13	RD262-1002-0004	. RING (LC)	1	
-93	13	RD114-1003-1004	. NUT (LC)	1	
-94	15	RD273-2004-2004	. UNION (LC)	1	
-95	15	RD262-3001-0004	. GASKET (LC)	1	

FIG. & INDEX NO	ITEM NO	PART NUMBER	DESCRIPTION 1 2 3 4 5 6 7	UNITS PER ASSY	USABLE ON CODE
38-96	15	SF703821	. TRANSDUCER, Simulated, static test (LC)	1	
-97	15	SF703819	. CLAMP, Transducer, static test	1	
		RD111-4010-0416	. BOLT (AP)	2	
		RD111-1003-3424	. BOLT (AP)	2	
		RD153-5002-0004	. WASHER (AP)	4	
-98	15	308228	. STRAP, Strut bracket, pressurization system	1	
-99	15	SF703405-3	. SUPPORT, Cap 4.00 strut	1	
		RD111-4011-6527	. BOLT (AP)	2	
		RD153-5002-0005	. WASHER (AP)	2	
		RD153-1002-0005	. WASHER (AP)	2	
		RD114-8005-1005	. NUT (AP)	2	
-100	15	SF704310	. TUBE ASSY, Static firing instrumentation, TG5a parameter (Replaced by AN814-4JL at TG5a port after static firing on engines incorporating MD102, MD103, and MD106 changes) (LC)	1	
		MC124C4W	. . NUT (MFD by 92005)	2	
		MS20819-4J	. . SLEEVE (Replaces MS20819-4C for all applications)	2	
		RD172-0014-0006	. . TAPE (COMBUSTION GAS)	AR	
		RD172-0007-0001	. . TAPE (COMPRESSED GAS)	AR	
		RD172-0018-0100	. . TAPE (100 PSI)	AR	
		SF704310-3	. . TUBE, 304 CRES, 1/4 IN. OD by 0.049 gage by 30.00 IN. LG	1	
-100A	16	AN814-4JL	. PLUG AND BLEEDER (Supersedes AN814-4CL) (Replaces SF704310 at TG5a port and associated hardware after static firing on engines incorporating MD102, MD103, and MD106 changes) (LC)	1	
-101	15	VSF1015C4	. SEAL (MFD by 92215) (LC)	2	
-102	15	RD273-2004-2004	. UNION (LC)	2	
-103	15, 16	RE261-3004-1004	. SEAL (Interchangeable with 12100AA4 MFD by 06099) (LC)	2	
-104	15	SF703821	TRANSDUCER, Simulated, static test (LC)	1	
-105	16	SF703819	. CLAMP, Transducer, static test	1	
		RD111-4010-0416	. BOLT (AP)	2	
		RD111-4008-3424	. BOLT (AP)	2	
		RD153-5002-0004	. WASHER (AP)	4	
-106	16	308228	. STRAP, Strut bracket, pressurization system	1	
-107	16	SF703801-3	. SUPPORT, Cap, 4.00 strut, 90 degree	1	
		RD111-4011-6527	. BOLT (AP)	2	
		RD153-5002-0005	. WASHER (AP)	2	
		RD153-1002-0005	. WASHER (AP)	2	
		RD114-8005-1005	. NUT (AP)	2	
-108	13, 16	SF704316-11	. TUBE ASSY, Static firing instrumentation, PF10 parameter (Replaced by AN814-4JL at PF10 port after static firing on engines incorporating MD102, MD103, and MD106 changes) (LC)	1	
		MC124C4W	. . NUT (MFD by 92005)	2	
		MS20819-4J	. . SLEEVE (Replaces MS20819-4C for all applications)	2	
		RD172-0002-0001	. . TAPE (ROCKET FUEL)	AR	
		RD172-0014-0033	. . TAPE (RP-1)	AR	
		RD172-0018-2000	. . TAPE (2000 PSI)	AR	
		SF704316-5	. . TUBE, 304 CRES, 1/4 IN. OD by 0.049 gage by 30.00 IN. LG	1	
-108A	16	AN814-4JL	. PLUG AND BLEEDER (Supersedes AN814-4CL) (Replaces SF704316-11 at PF10 port and associated hardware after static firing on engines incorporating MD102, MD103, and MD106 changes) (LC)	1	
-109	13, 16	VSF1015C4	. SEAL (MFD by 92215) (LC)	2	
-110	13	RD273-2004-2004	. UNION (LC)	1	
-111	16	RD262-3001-0004	. GASKET (LC)	1	
-112	13	AN804-4J	. TEE (Supersedes AN804-4C) (LC)	1	
-113	13	RD262-3001-0004	. GASKET (LC)	1	
-114	13	RD262-1002-0004	. RING (LC)	1	
-115	13	RD114-1003-1004	. NUT (LC)	1	
-116	13	SF703821	. TRANSDUCER, Simulated, static test (LC)	1	
-117	16	SF703603	. TUBE ASSY, Static firing instrumentation, PF10 parameter (LC)	1	
		MC124C4W	. . NUT (MFD by 92003)	2	
		MS20819-4J	. . SLEEVE (Replaces MS20819-4C for all applications)	3	
		RD172-0002-0001	. . TAPE (ROCKET FUEL)	AR	
		RD172-0014-0033	. . TAPE (RP-1)	AR	
		RD172-0018-2000	. . TAPE (2000 PSI)	AR	
		SF703603-3	. . TUBE, 304 CRES, 1/4 IN. OD by 0.049 gage by 26.00 IN. LG	1	
-118	16	VSF1015C4	. SEAL (MFD by 92215) (LC)	2	
-119	16	RD273-2004-2004	. UNION (LC)	1	
-120	16	RD262-3001-0004	. GASKET (LC)	1	
-121	16	SF703821	. TRANSDUCER, Simulated, static test (LC)	1	
-122	15	SF703616	. SUPPORT, Cap 4.00 strut	1	
		RD111-4011-6426	. BOLT (AP)	4	
		RD153-5002-0004	. WASHER (AP)	4	
		RD153-1002-0004	. WASHER (AP)	4	
		RD114-8003-1004	. NUT (AP)	4	
-123	14	SF703615	. CLAMP, Dual transducer, 4.00 strut	1	
		RD111-4011-6426	. BOLT (AP)	4	
		RD153-5002-0004	. WASHER (AP)	4	
		RD153-1002-0004	. WASHER (AP)	4	
		RD114-8003-1004	. NUT (AP)	4	

FIG & INDEX NO	ZONE NO	PART NUMBER	DESCRIPTION 1 2 3 4 5 6 7	UNITS PER ASSY	USABLE ON CODE
38-124	10	SF703397	. TUBE ASSY, Static firing instrumentation, NH8 parameter (Replaced by AN814-4JL at NH8 port after static firing on engines incorporating MD102, MD103, and MD166 changes) (LC)	1	
		MC124C4W	. . NUT (MFD by 97003)	2	
		MS20819-4J	. . SLEEVE (Replaces MS20819-4C for all applications)	2	
		RD172-0005-0001	. . TAPE (LUBRICATION)	AR	
		RD172-0014-0033	. . TAPE (RP-1)	AR	
		RD172-0018-1000	. . TAPE (1000 PSI)	AR	
		SF703397-3	. TUBE, 304 CRES, 1/4 IN. OD by 0.049 gage by 12.00 IN. LG	1	
-124A	10	AN814-4JL	. PLUG AND BLEEDER (Supersedes AN814-4CL) (Replaces SF703397 at NH8 port and associated hardware after static firing on engines incorporating MD102, MD103, and MD166 changes) (LC)	1	
-125	10	VSF1015C4	. SEAL (MFD by 92215) (LC)	2	
-126	10	AN837-4J	. ELBOW (Supersedes AN837-4C) (LC)	1	
-127	10	AN833-4J	. ELBOW (Supersedes AN833-4C) (LC)	1	
-128	10	RD262-3001-0001	. GASKET (LC)	2	
-129	10	RD262-1002-0004	. RING (LC)	2	
-130	10	RD114-1003-1004	. NUT (LC)	2	
-131	10	SF703821	. TRANSDUCER, Simulated, static test (LC)	1	
-132	10	SF703819	. CLAMP, Transducer, static test	1	
		RD111-4011-0429	. BOLT (AP)	2	
		RD111-4011-0418	. BOLT (AP)	2	
		RD153-5002-0004	. WASHER (AP)	4	
-133	18	SF704319-11	. TUBE ASSY, Static firing instrumentation, LB1b parameter (Replaced by AN814-4JL at LB1b port after static firing on engines incorporating MD102, MD103, and MD166 changes) (LC)	1	FGB
		MC124C4W	. . NUT (MFD by 92003)	2	
		MS20819-4J	. . SLEEVE (Replaces MS20819-4C for all applications)	2	
		RD172-0005-0001	. . TAPE LUBRICATION)	AR	
		RD172-0014-0033	. TAPE (RP-1)	AR	
		RD172-0018-1000	. . TAPE (1000 PSI)	AR	
		SF703319-5	. . TUBE, 304 CRES, 1/4 IN. OD by 0.049 gage by 30.00 IN. LG	1	
-133A	18	AN814-4JL	. PLUG AND BLEEDER (Supersedes AN814-4CL) Replaces SF704319-11 at LB1b port and associated hardware after static firing on engines incorporating MD102, MD103, and MD166 changes) (LC)	1	
-134	18	VSF1015C4	. SEAL (MFD by 92215) (LC)	1	
-135	18	RD273-2004-2004	. UNION (LC)	1	FGB
-135A	18	NA5-24002T2	. FITTING, Orifice (LC)	1	EMB
-136	18	RD262-3001-0001	. GASKET (LC)	1	
-137	18	SF703821	. TRANSDUCER, Simulated, static test (LC)	1	
-138	18	SF703819	. CLAMP, Transducer, static test	1	
		RD111-4008-3124	. BOLT (AP)	2	
		RD111-4010-0416	. BOLT (AP)	2	
		RD153-5002-0004	. WASHER (AP)	4	
-139	18	SF703419-11	. SUPPORT ASSY, Cap inlet flange, fuel pump	1	
		AN3H3A	. BOLT (AP)	6	
		LD153-0010-0008	. WASHER (AP)	6	
-140	18, 19	SF704319-21	. TUBE ASSY, Static firing instrumentation, LB1b parameter (LC)	1	FGB
		MC124C4W	. . NUT (MFD by 92003)	2	
		MS20819-4J	. . SLEEVE (Replaces MS20819-4C for all applications)	2	
		RD172-0005-0001	. . TAPE (LUBRICATION)	AR	
		RD172-0014-0033	. . TAPE (RP-1)	AR	
		RD172-0018-1000	. . TAPE (1000 PSI)	AR	
		SF704319-7	. . TUBE, 304 CRES, 1/4 IN. OD by 0.049 gage by 32.00 IN. LG	1	
-141	18, 19	VSF1015C4	. SEAL (MFD by 92215) (LC)	2	FGB
-142	19	RD273-2004-2004	. UNION (LC)	1	FGB
-143	19	RD262-3001-0004	. GASKET (LC)	1	FGB
-144	19	SF703821	. TRANSDUCER, Simulated, static test (LC)	1	FGB
-145	18	AN804-4J	. TEE (Supersedes AN804-4C) (LC)	1	FGB
-145A	18	AN833-4J	. ELBOW (Supersedes AN833-4C) (LC)	1	EMB
-146	18	RD262-3001-0004	. GASKET (LC)	1	FGB
-147	18	RD262-1002-0004	. RING (LC)	1	FGB
-148	18	RD114-1003-1004	. NUT (LC)	1	FGB
-149	18	SF703819	. CLAMP, Transducer, static test	1	FGB
		RD111-4010-0429	. BOLT (AP)	2	
		RD111-4010-0416	. BOLT (AP)	2	
		RD153-5002-0004	. WASHER (AP)	4	
-150	18	SF703613	. PLATE, Adapter, transducer support	1	FGB
-151	18	LD152-0019-0250	. SPACER	1	FGB
-152	20	SF704302	. TUBE ASSY, Static firing instrumentation, KF6d parameter (Replaced by AN814-4JL at KF6d-2 port after static firing on engines incorporating MD102, MD103, and MD166 changes) (LC)	1	
		MC124C4W	. . NUT (MFD by 92203)	2	
		MS20819-4J	. . SLEEVE (Replaces MS20819-4C for all applications)	2	
		RD172-0002-0001	. . TAPE (ROCKET FUEL)	AR	
		RD172-0014-0033	. . TAPE (RP-1)	AR	
		RD172-0018-0200	. . TAPE (200 PSI)	AR	
		SF704302-3	. . TUBE, 304 CRES, 1/4 IN. OD by 0.049 gage by 21.00 IN. LG	1	

FIG & INDEX NO	ZONE NO	PART NUMBER	1 2 3 4 5 6 7 DESCRIPTION	UNITS PER ASSY	USABLE ON CODE
38-152A	20	AN814-4JL	. PLUG AND BLEEDER (Supersedes AN814-4CL) (Replaces SF704302 at KF6d-2 port and associated hardware after static firing on engines incorporating MD102, MD103, and MD166 changes) (LC)	1	
-153	20	VSF1015C4	. SEAL (MFR by 92215) (LC)	2	
-154	20	RD273-3001-2004	. UNION (LC)	2	
155	20	RD*02-3001-0004	. GASKET (LC)	2	
156	20	SF703821	. TRANSDUCER, Simulated, static test (LC)	1	
-157	20	SF703819	. CLAMP, Transducer, static test	1	
		RD111-4008-3429	. BOLT (AP)	2	
		RD111-4010-0416	. BOLT (AP)	2	
		RD153 5002-0004	. WASHER (AP)	1	
-158	20	SF703419-11	. SUPPORT ASSY, Cap inlet flange, fuel pump	1	
		AN913A	. BOLT (AP)	6	
		LD151-0010-0008	. WASHER (AP)	6	
-159	9	AN814-4JL	. PLUG AND BLEEDER (Supersedes AN814-4CL) (LC)	3	
-160	9	RD262-3001-0004	. GASKET (LC)	3	
-161	9	602089	TUBE ASSY, System close (Welded)(NHA 601601)(Propellant valves close tube)(LC)	REF	
-162	9	602088	TUBE ASSY, System open (Welded)(NHA 601601)(Propellant valves open tube)(LC)	REF	
-163		DELETED			
-164	8	703103-7	STRUT, Junction box support (NHA 702561)	REF	
-165	8	408845	TUBE ASSY, Fuel seal drain, primary (NHA 407001) (LC)	REF	
-166	17	458797	BRACKET, Lube system valve (NHA 458800)	REF	
-167	17, 18	408840	TUBE ASSY, Nitrogen purge, overboard drain (NHA 407001) (LC)	REF	
-168	17, 18	458777	TUBE ASSY, Fuel volute to valve, lube feed (Welded) (NHA 458800) (LC)	REF	
-169	17	558075	VALVE ASSY, Bearing coolant control (NHA 458800) (LC)	REF	
-169	17	668075-11	VALVE ASSY, Bearing coolant control (NHA 458P00) (LC)	REF	
-170	17	404920	ELBOW ASSY, Fuel inlet, NO. 2 (Welded) (NHA 407001) (LC)	REF	
-170	17	404920-11	ELBOW ASSY, Fuel inlet, NO. 2 (Welded) (NHA 407001) (LC)	REF	
-171	5, 8, 11	209250	DOME ASSY, Injector, thrust chamber (Welded) (NHA 209201) (LC)	REF	
-171	5, 8, 11	209250-11	DOME ASSY, Injector, thrust chamber (Welded) (NHA 209201) (LC)	REF	
-172	9, 10	558350	VALVE ASSY, Solenoid 3-way (J50) (NHA 601601) (LC)	REF	
-173	9	601875	MANIFOLD ASSY, Hydraulic filter and 4-way solenoid valve (NHA 601601) (LC)	REF	

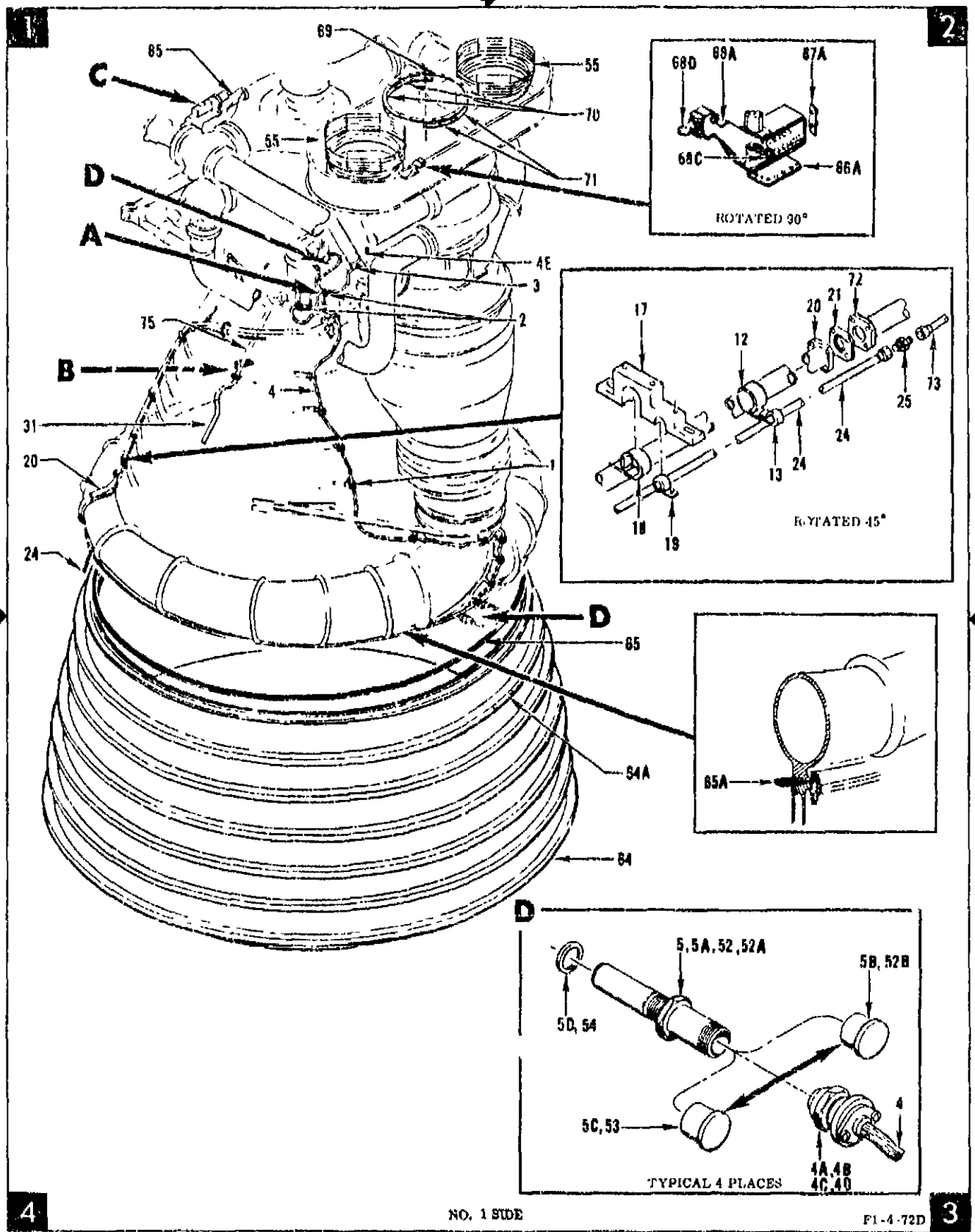

Figure 39. Loose Equipment Installation (Sheet 1 of 2)

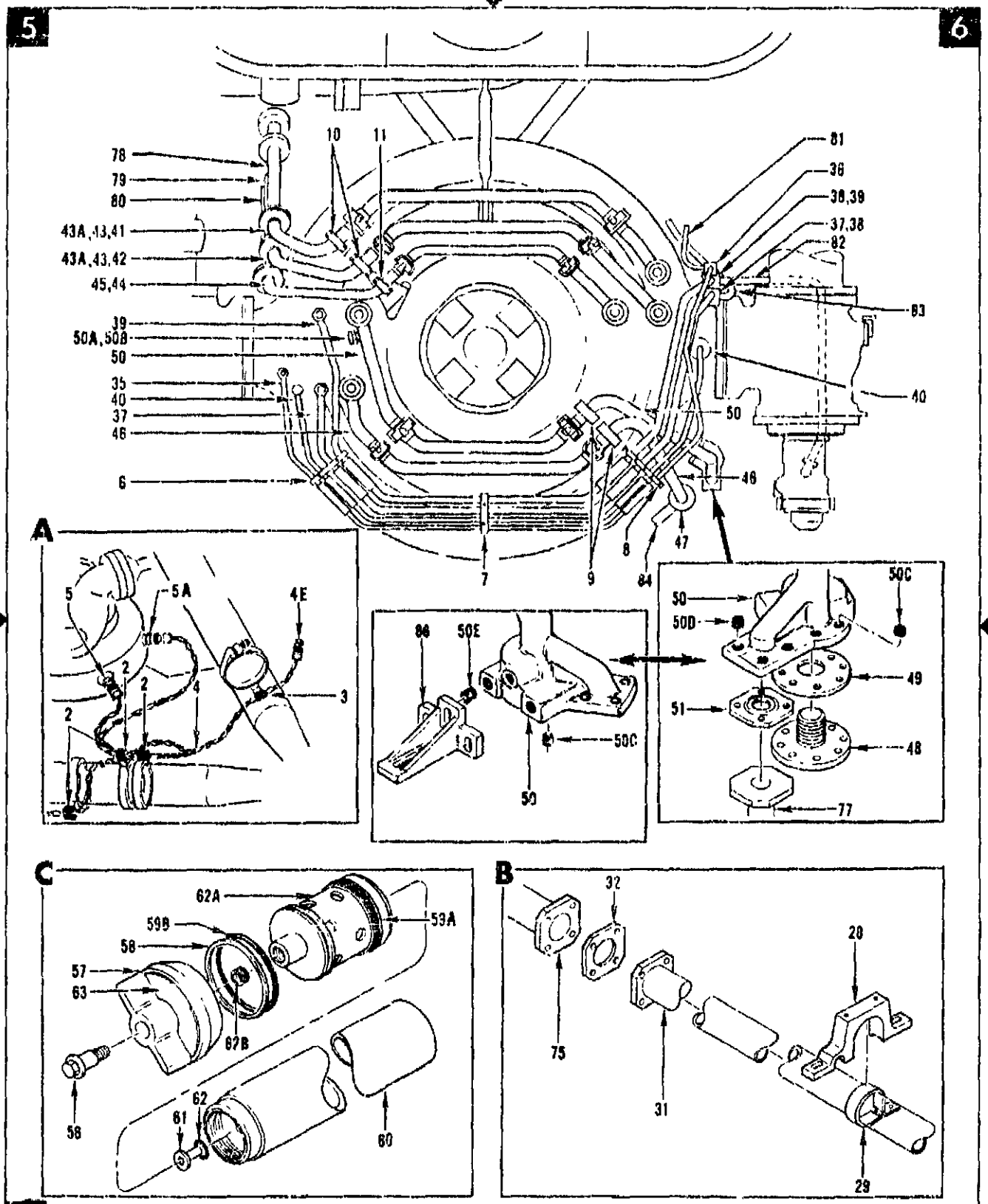

Figure 39. Loose Equipment Installation (Sheet 2 of 2)

FIG & INDEX NO	ZONE NO	PART NUMBER	DESCRIPTION 1 2 3 4 5 6 7	UNITS PER ASSY	USABLE ON CODE
39-		651576	LOOSE EQUIPMENT INSTALLATION (See figure 1, index 8, for REQMT)	REF	
- 1	2	RE127-2008-0010	. CLAMP	12	
		AN520C10R8	. SCREW (AP)	1	
		LD153-0010-0007	. WASHER (AP)	1	
		NAS679C3W	. NUT (AP)	1	
- 2	2,8	RE127-2008-0010	. CLAMP	4	
		NAS43HT3-24	. SPACER (AP)	1	
		LD153-0010-0007	. WASHER (AP)	1	
		NAS679CJW	. NUT (AP)	1	
- 3	2,6	RE127-2008-0013	. CLAMP	1	
		NAS43HT3-24	. SPACER (AP)	1	
		LD153-0010-0007	. WASHER (AP)	1	
		NAS679C3W	. NUT (AP)	1	
- 4	1,3,8	502932	. WIRING HARNESS ASSY, High voltage igniters (Replaces 502308 and 502930) (R/A on engines F-2029 THRU F-2053 incorporating MD116 and MD127 changes)	1	
- 4A	3	NA5-27556TS142S	. . PLUG ASSY, Electrical, high reliability, 14S-2S shell size (Gas generator igniter NO. 1) (P43)	1	
- 4B	3	NA5-27556TS142S	. . PLUG ASSY, Electrical, high reliability, 14S-2S shell size (Gas generator igniter NO. 2) (P44)	1	
- 4C	1	NA5-27556TS142S	. . PLUG ASSY, Electrical, high reliability, 14S-2S shell size (Turbine exhaust igniter NO. 1) (P45)	1	
- 4D	1	NA5-27556TS142S	. . PLUG ASSY, Electrical, high reliability, 14S-2S shell size (Turbine exhaust igniter NO. 2) (P46)	1	
- 4E	2	NA5-2755612211P	. . PLUG ASSY, Electrical, high reliability, 22-14P shell size (Interconnect to igniters) (P47)	1	
		RD414-1009-0002	. . PLUG, 8S-1S shell size (Harness igniter shields) (P450)	1	
		RD414-1011-0002	. . RECEPTACLE, 8S-1P shell size (Harness igniter shields) (J450)	1	
- 5	3,5	651990-11	. IGNITER ASSY, High voltage (Pyrotechnic igniter (Gas generator NO. 1)) (J43)	1	
- 5A	3,5	651990-11	. IGNITER ASSY, High voltage (Pyrotechnic igniter (Gas generator NO. 2)) (J44)	1	
			PARTIAL BREAKDOWN FOLLOWS		
- 5B	3	10-435925-141	. . CAP, Shielding (MFD by 77020) (Required during engine igniter installation at KSC) (LC)	1	
- 5C	3	RD205-6009-0001	. . CAP, Shorting (Not required during engine igniter installation at KSC) (LC)	1	
- 5D	3	651912-3	. . GASKET, Igniter, high voltage, copper crush (LC)	1	
- 6	5	308049	. CLIP, Support, purge hose, customer connect	1	
		AN520C10R14	. SCREW (AP)	1	
		AN520C10R18	. SCREW (AP)	1	
		LD153-0010-0008	. WASHER (AP)	4	
		NAS679C3W	. NUT (AP)	2	
- 7	5	308437	. CLIP, Support, purge hose, customer connect	1	
		AN520C10R14	. SCREW (AP)	1	
		AN520C10R16	. SCREW (AP)	1	
		LD153-0010-0008	. WASHER (AP)	4	
		NAS679C3W	. NUT (AP)	2	
- 8	6	651578	. COVER, Support, purge hose, customer connect (R/A replaced 651293)	1	
		RE127-2003-0006	. CLAMP	2	
		RE127-2003-0010	. CLAMP	2	
		RD111-1009-0414	. BOLT (AP)	5	
		LD153-0013-0002	. WASHER (AP)	5	
- 9	6	651297	. COVER, Bracket, customer connect ducts, hydraulic (R/A replaced 601911)	2	
		RD111-1009-0417	. BOLT (AP)	4	
		K2237-4	. PAD (MFD by 51116) (AP)	2	
		LD153-0013-0002	. WASHER (AP)	4	
-10	5	651296	. COVER, Bracket, customer connect return ducts (R/A replaced 308652)	2	
		RD111-1009-0417	. BOLT (AP)	4	
		K2237-6	. PAD (MFD by 51116) (AP)	2	
		LD153-0013-0002	. WASHER (AP)	4	
-11	5	651298	. COVER, Bracket, customer connect duct, helium supply (R/A replaced 651285)	1	
		RD111-1009-0417	. BOLT (AP)	4	
		K2237-2	. PAD (MFD by 51116) (AP)	2	
		LD153-0013-0002	. WASHER (AP)	4	
-12	2	RE127-2001-0020	. CLAMP	5	
-13	2	RE127-2001-0006	. CLAMP	5	
-14		DELETED			
		AN520C10R8	. SCREW (AP)	1	
		LD153-0010-0007	. WASHER (AP)	1	
		NAS679C3W	. NUT (AP)	1	
-15		DELETED			
-16		DELETED			
-17	2	408232	. CLAMP, Overboard manifold drain, oxidizer	5	
-18	2	RE127-2002-0020	. CLAMP	5	
-19	2	RE127-2002-0006	. CLAMP	5	
		RD111-1010-6416	. BOLT (AP)	2	

FIG & INDEX NO.	ZONE NO	PART NUMBER	DESCRIPTION 1 2 3 4 5 6 7	UNITS PER ASSY	USABLE ON CODE
39-		RD153-5002-0004	. WASHER (AP)	2	
		RD153-1002-0004	. WASHER (AP)	2	
		NAS679C4W	. NUT (AP)	2	
-20	1,3	651284	. LINE ASSY, Oxidizer, overboard drain (Welded) (LC)	1	
		RD111-4011-6425	. BOLT (AP)	4	
		RD153-5002-0004	. WASHER (AP)	4	
		RD153-1002-0004	. WASHER (AP)	4	
		RD114-8005-1004	. NUT (AP)	4	
		RD172-0013-0001	. . TAPE (LPS)	AR	
		RD172-0014-0040	. . TAPE (DRAIN)	AR	
		RD172-0001-0001	. . TAPE (ROCKET OXIDIZER)	AR	
-21	2	406760	. SEAL, Pressure actuated, cryogenic (LC)	1	
-22		DELETED			
-23		DELETED			
-24	1,2	651295	. TUBE ASSY, Nitrogen purge, overboard drain (LC)	1	
		AN818-8J	. . NUT (Replaces AN818-8C for all applications)	1	
		MS20819-8J	. . SLEEVE (Replaces MS20819-8C for all applications)	1	
		RD172-0007-0001	. . TAPE (COMPRESSED GAS)	AR	
		RD172-0014-0030	. . TAPE (NITROGEN)	AR	
		RD172-0014-0040	. . TAPE (DRAIN)	AR	
		RD172-0014-0039	. . TAPE (FLOW)	AR	
		651295-3	. . TUBE, 321 CRES, 1/2 IN. OD by 0.042 gage by 115.00 IN. LG	1	
-25	2	AN815-8J	. UNION (Supersedes AN815-8C) (LC)	1	
-26		DELETED			
-27		DELETED			
-28	7	408231	. CLAMP, Overboard drain, fuel	5	
-29	7	RE127-2002-0024	. CLAMP	5	
-30		DELETED			
		RD111-1010-6410	. BOLT (AP)	2	
		RD153-5002-0004	. WASHER (AP)	2	
		RD153-1002-0004	. WASHER (AP)	2	
		NAS679C4W	. NUT (AP)	2	
-31	1,7	651283	. LINE ASSY, Overboard drain, fuel (Welded) (LC)	1	
		RD111-4011-6424	. BOLT (AP)	4	
		RD153-5002-0004	. WASHER (AP)	4	
		RD153-1002-0004	. WASHER (AP)	4	
		RD114-8005-1004	. NUT (AP)	4	
		RD172-0005-0001	. . TAPE (LUBRICATION)	AR	
		RD172-0014-0040	. . TAPE (DRAIN)	AR	
		RD172-0014-0033	. . TAPE (RP-1)	AR	
		RD172-0018-0001	. . TAPE (1 PSI)	AR	
		RD172-0014-0039	. . TAPE (FLOW)	AR	
-32	7	19-406332-33	. SEAL ASSY, Plate (LC)	1	
-33		DELETED			
-34		DELETED			
-35	5	NA5-26884	. HOSE ASSY, Gas generator fuel injector purge, customer connect (Cocoon purge wrap-around hose) (LC)	1	
		RD111-1010-6424	. BOLT (AP)	4	
		LD153-0013-0002	. WASHER (AP)	4	
		RD153-1002-0004	. WASHER (AP)	4	
		RD114-8003-1004	. NUT (AP)	4	
-36	5	19-406332-23	. SEAL ASSY, Plate (LC)	1	
-37	5,6	NA5-26881	. HOSE ASSY, Turbopump LOX seal purge, customer connect (Turbopump oxidizer intermediate seal purge wrap-around hose) (LC)	1	
		RD111-1010-6424	. BOLT (AP)	4	
		LD153-0013-0002	. WASHER (AP)	4	
		RD153-1002-0004	. WASHER (AP)	4	
		RD114-8003-1004	. NUT (AP)	4	
-38	6	19-406332-15	. SEAL ASSY, Plate (LC)	2	
-39	5,6	NA5-26882	. HOSE ASSY, LOX dome purge, customer connect (Oxidizer dome purge wrap-around hose) (LC)	1	
		RD111-1010-6424	. BOLT (AP)	4	
		LD153-0013-0002	. WASHER (AP)	4	
		RD153-1002-0004	. WASHER (AP)	4	
		RD114-8003-1004	. NUT (AP)	4	
-40	5,6	NA5-26883	. HOSE ASSY, Thrust chamber jacket pre-fill, customer connect (Pre-fill wrap-around hose) (LC)	1	
-41	5	406070	. DUCT ASSY, GOX outlet, customer connect (GOX wrap-around duct) (Welded) (LC)	1	
-42	5	406075	. DUCT ASSY, Helium return, customer connect (Helium return wrap-around duct) (Welded) (LC)	1	
		RD111-4011-6527	. BOLT (AP)	8	
		RD153-5002-0005	. WASHER (AP)	8	
		RD153-1002-0005	. WASHER (AP)	8	
		RD114-8005-1005	. NUT (AP)	8	
-43	6	408356	. SEAL, Pressure-actuated, hot gas (LC)	2	GTB
-43A	5	409805	. SEAL, Pressure-actuated, hot gas (LC)	2	GTC, GUA

FIG & INDEX NO	ZONE NO	PART NUMBER	DESCRIPTION 1 2 3 4 5 6 7	UNITS PER ASSY	USABLE ON CODE
39-44	5	406073	. DUCT ASSY, Helium supply, customer connect (Helium supply wrap-around duct) (Welded) (LC)	1	
		RD111-4011-6527	. BOLT (AP)	6	
		RD153-5002-0005	. WASHER (AP)	6	
		RD153-1002-0005	. WASHER (AP)	6	
		RD114-8005-1005	. NUT (AP)	6	
-45	6	406349	. SEAL, Pressure actuated (LC)	1	
-46	5,6	406072	. DUCT ASSY, Hydraulic return, customer connect (Hydraulic return wrap-around duct) (Welded) (LC)	1	
		RD111-4011-6428	. BOLT (AP)	6	
		RD153-5003-0004	. WASHER (AP)	6	
		RD153-1002-0004	. WASHER (AP)	6	
		RD114-8005-1004	. NUT (AP)	6	
-47	6	19-406338-3	. SEAL ASSY, Plate, dual type (LC)	1	BKA
-48	7	651202	. COVER, Customer connect duct, hydraulic ground supply to filter (LC)	1	
		RD111-4010-6510	. BOLT (AP)	8	
		RD153-5002-0005	. WASHER (AP)	8	
-49	7	19-408758-3	. SEAL ASSY, Plate, dual type (LC)	1	
-50	5,6	406071	. DUCT ASSY, Hydraulic supply, customer connect (Hydraulic supply wrap around duct) (Welded) (LC)	1	
-50A	5	RD265-3004-2002	. . PLUG (LC)	1	
-50B	5	MS29512-04	. . PACKING (LC)	1	
-50C	6,7	1191-5CNVX468	. . INSERT (MFD by 91767) (LC)	8	
-50D	6	KN428SP	. . INSERT (MFD by 29372) (LC)	4	
-50E	8	KN524SP	. . INSERT (MFD by 29372) (LC)	3	
-51	7	19-406332-13	. SEAL ASSY, Plate (LC)	1	
-52	2	651990-11	. IGNITER ASSY, High voltage (GFP) (Pyrotechnic igniter) (Turbine exhaust) (J45)	1	
-52A	2	651990-11	. IGNITER ASSY, High voltage (GFP) (Pyrotechnic igniter) (Turbine exhaust) (J46)	1	
			PARTIAL BREAKDOWN FOLLOWS		
-52B	3,4	10-439925-141	. . CAP, Shielding (MFD by 77820) (Required during engine igniter installation at KSC) (LC)	1	
-53	4	RD265-6000-0001	. . CAP, Shorting (Not required during engine igniter installation at KSC) (LC)	1	
-54	2	651912-3	. . GASKET, Igniter, high voltage, copper crush (LC)	1	
-55	1,2	NA5-260016	. BOOT, Insulation (Fuel inlet elbow to-interface panel insulation boot)	2	
		651329-11	. IGNITER ASSY, Hypergol, type K (Hypergol cartridge) (LC)	1	
-56	8	650854	. . BOLT, Retainer, hypergol igniter, type J (LC)	1	
-57	8	651339	. . CAP, Retainer, hypergol igniter (LC)	1	
-58	8	MS28783-6	. . RING (LC)	1	
-59		DELETED			
-59A	8	MS29513-227	. . PACKING (LC)	1	
-59B	8	MS29513-228	. . PACKING (LC)	1	
-60	8	651327	. . CARTRIDGE ASSY, Hypergol igniter, type J (Hypergol igniter) (Welded)	1	
-61	8	19-651330	. . SEAL, Panel, blind fasteners (LC)	1	
-62	8	5-017-77-545	. . O-RING (MFD by 83259) (LC)	1	
-62A	8	651337	. . PLUG ASSY, Hypergol igniter (LC)	1	
-62B	8	3591-6CNX75	. . . INSERT (MFD by 91767) (LC)	1	
-63	8	RD170-3032-0001	. . PLATE	1	
		RD170-2033-0001	. . PLATE	1	
-64	3	209210-21	. EXTENSION ASSY, Nozzle, 23 injection (Thrust chamber nozzle extension)	1	CRD
-64	3	209210-31	EXTENSION ASSY, Nozzle, 23 injection (Thrust chamber nozzle extension)	1	EVA
		RD111-4013-0108	. BOLT (AP)	240	
		LD153-0013-0002	. WASHER (AP)	240	
		RD153-1002-0001	. WASHER (AP)	240	
		H19083-4	. NUT (HUDEY 75237) (AP)	240	
-64A	3	BN523-1032-1	. . NUT ASSY, Blind (MFD by 73197)	72	CRD
-64A	3	BN523-1032-2	. . NUT ASSY, Blind (MFD by 73197)	72	EVA
-65	3	397	. GASKET, Thermocore, 1/8 IN. square (MFD by 75165)	1	
-65A	3	19-460887	. SEAL, Asbestos, tadpole	1	
-66		DELETED			
-66A	2	651592	. DOOR, Post, support, electrical cable	1	
		AN520C10R14	. SCREW (AP)	12	
		LD153-0010-0008	. WASHER (AP)	12	
-67		DELETED			
-67A	2	651591	. PLATE ASSY, Post, support electrical cable (Riveted)	1	
		RD111-1010-6417	. BOLT (AP)	2	
		LD153-0013-0002	. WASHER (AP)	2	
-68		DELETED			
-68A	2	651590	. POST ASSY, Support, electrical cable (Welded)	1	
		RD111-1010-6416	. BOLT (AP)	3	
		RD111-1010-6417	. BOLT (AP)	3	
		RD111-1009-0413	. BOLT (AP)	2	
		RD111-1009-0412	. BOLT (AP)	2	
		RD111-4009-0010	. BOLT (AP)	1	
		NAS1102C4-40	. SCREW (AP)	2	
		LD153-0013-0002	. WASHER (AP)	5	

FIG & INDEX NO	ZONE NO	PART NUMBER	DESCRIPTION 1 2 3 4 5 6 7	UNITS PER ASSY	USABLE ON CODE
39-68A		RD153-1002-0004	. WASHER (AP)	5	
		RD153-1002-0003	. WASHER (AP)	1	
		RD153-5002-0008	. WASHER (AP)	1	
		RD114-8005-0001	. NUT (AP)	3	
		RD114-8005-2004	. NUT (AP)	2	
		RD114-8005-1008	. NUT (AP)	1	
-68B		DELETED			
		651590-21	. . POST ASSY (NHA 651590)	1	
-68C	2	BN359-1032-3	. . . NUT ASSY, Blind (Used on 651570 also) (MFD by 73197)	13	
-68D	2	651590-27	. . . ROD END (NHA 651590-21)	1	
-69	1	651598	. SEAL ASSY, Insulation, Interface panel (GOX inlet (Interface panel, oxidizer inlet insulation seal)	2	
-70	2	651596	. INSULATION CHANNEL, Interface panel	2	
-71	2	651587	. INSULATION CHANNEL, Interface panel	2	
		NAS1003-3A	. BOLT (AP)	10	
		LD153-6013-0001	. WASHER (AP)	10	
		RD153-1003-0006	. WASHER (AP)	10	
		RD114-8003-1003	. NUT (AP)	10	
-72	2	408845	LINE ASSY, Drain oxidizer overboard (Welded) (LC)	REF	
-73	2	408841	TUBE ASSY, Drain, nitrogen purge (LC)	REF	
74		DELETED			
-75	1,7	409243	LINE ASSY, Overboard drain fuel (LC)	REF	
-76		DELETED			
-77	7	602037	HOSE ASSY, Ground supply (Engine control valve ground hydraulic supply hose) (LC)	REF	
		RD111-4010-6418	BOLT (AP)	4	
		LD153-5002-0004	WASHER (AP)	4	
-78	5	406069	DUCT ASSY, GOX return, heat exchanger end (GOX duct (Heat exchanger end)) (LC)	REF	
-78	5	406069-11	DUCT ASSY, GOX return, heat exchanger end (GOX duct (Heat exchanger end))(LC)	REF	
-78	5	406069-21	DUCT ASSY, GOX return, heat exchanger end (GOX duct (Heat exchanger end)) (LC)	REF	
-78	5	406069-31	DUCT ASSY, GOX return, heat exchanger end (GOX duct (Heat exchanger end)) (LC)	REF	
-79	5	406040	DUCT ASSY, Bellow return, heat exchanger end (LC)	REF	
-79	5	406087	DUCT ASSY, Bellow return, heat exchanger end (LC)	REF	
-80	5	406068	DUCT ASSY, Bellow supply, heat exchanger end (LC)	REF	
-81	6	308441	TUBE ASSY, Purge cocoon (R/A replaced 308636 and 308671, (LC)	REF	
-82	6	410079	TUBE ASSY, Dome purge, NO. 1 main oxidizer valve (LC)	REF	
-83	6	410080	LINE ASSY, Purge, pump seal (Welded) (Turbopump seal purge line) (LC)	REF	
-84	6	NAS-26750	HOSE ASSY, Hydraulic return, checkout valve to customer connect (Checkout valve ground return hose) (LC)	REF	
-84	6	NAS-26670	HOSE ASSY, Hydraulic return, checkout valve to hydraulic supply wrap-around duct (Checkout valve ground return hose) (LC)	REF	
-85	1	407791	MANIFOLD ASSY, Hypergol (LC)	REF	
-86	8	651287	SUPPORT, Post, customer connect, hydraulic supply	REF	
		RD111-4008-6508	BOLT (AP)	3	
		RD153-5002-0005	WASHER (AP)	3	

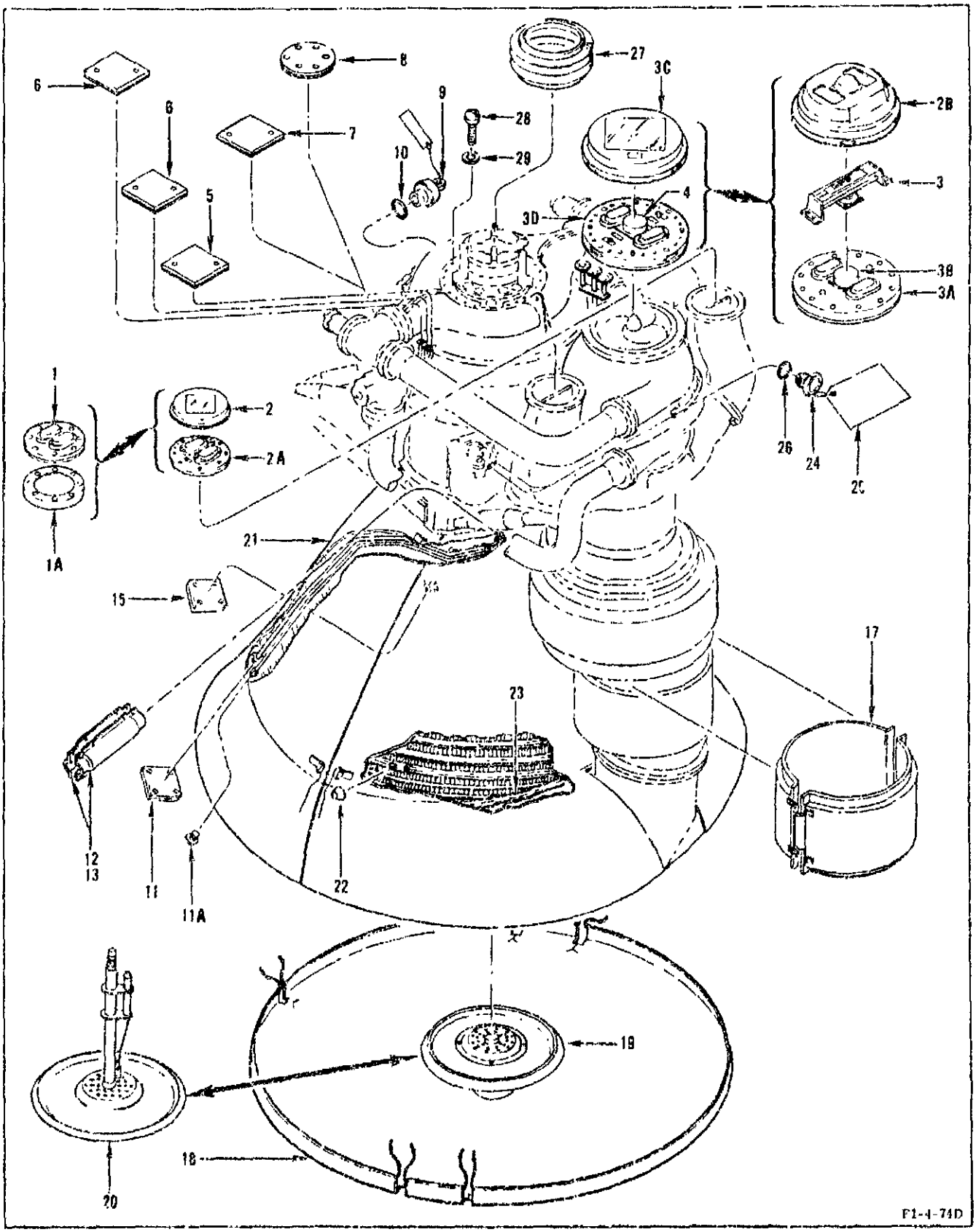

Figure 40. Engine Closures

FIG & INDEX NO	ZONE NO	PART NUMBER	DESCRIPTION 1 2 3 4 5 6 7	UNITS PER ASSY	USABLE ON CODE
40-		RK395-00024	ENGINE CLOSURES (See figure 1 for REQMT)	REF	
- 1		RK395-44032-011	. CLOSURE ASSY, Fuel inlet (NO. 1 and NO. 2 fuel inlet)	2	FRA
- 1A		RK395-38006	. PROTECTOR, Flange (NO. 1 and NO. 2 fuel inlet)	2	FRB
		MS35276-297	. SCREW (AP)	8	FRB
		LD153-0010-0013	. WASHER (AP)	8	FRB
- 2		ST3950180RKL021	. COVER ASSY, Protective, inlet closure, fuel and oxidizer (NO. 1 and NO. 2 fuel inlet)	2	FRA
- 2A		ST3950153RKI 001	. CLOSURE ASSY, Fuel inlet (NO. 1 and NO. 2 fuel inlet) (Contains captive fasteners)	2	FRA
- 2B		ST3950180RKI 011	. COVER ASSY, Protective inlet closure, fuel and oxidizer (Turbopump oxidizer inlet)	1	FRB
- 3		G4088	. FIXTURE ASSY, Preload, turbopump shaft (Turbopump oxidizer inlet) (Installed with RK395-44034-021 closure only)	1	FRB
		MS20007H22	. BOLT (AP)	4	FRB
		LD153-0013-0005	. WASHER (AP)	4	FRB
- 3A		RK395-44034-021	. CLOSURE ASSY, Oxidizer inlet (Turbopump oxidizer inlet) (Installed with G4088 fixture)	1	FRB
		NAS1007-15H	. BOLT (AP)	12	FRB
		LD153-0010-0013	. WASHER (AP)	12	FRB
- 3B		ST3950092RKL011	. . CUP ASSY, Rotor clamp, turbopump shipping	1	FRB
		AN4-7A	. . BOLT (AP)	4	FRB
		LD153-0010-0010	. . WASHER (AP)	4	FRB
- 3C		ST3950180RKI 001	. COVER ASSY Protective, inlet closure, fuel and oxidizer (Turbopump oxidizer inlet)	1	FRA
- 3D		ST3950154RKL001	. CLOSURE ASSY, Oxidizer inlet (Turbopump oxidizer inlet) (Not installed with G4088 fixture) (Contains captive fasteners)	1	FRA
- 4		ST3950173RKI 001	. . CUP ASSY, Closure, oxidizer inlet, turbopump (Turbopump oxidizer inlet) (NHA RK395-00024)	1	FRA
		AN4-7A	. . BOLT (AP)	1	FRA
		LD153-0010-0010	. . WASHER (AP)	4	FRA
- 5		RX20660-33	. PLATE ASSY (Inflo-purge line)	1	
- 6		RX20660-45	. PLATE ASSY (Inflo-purge line)	2	
		NAS501-4-10	. BOLT (AP)	2	
		LD153-0010-0010	. WASHER (AP)	4	
		AN316C4R	. NUT (AP)	2	
- 7		RK395-44001-021	. PLATE ASSY, Rectangular (Inflo-hydraulic supply)	1	
		NAS501-4-13	. BOLT (AP)	4	
		LD153-0010-0010	. WASHER (AP)	8	
		AN316C4R	. NUT (AP)	4	
- 8		RK395-44010-011	. CLOSURE ASSY, Round (Inflo-hydraulic return)	1	
		NAS501-4-13	. BOLT (AP)	6	
		LD153-0010-0010	. WASHER (AP)	12	
		AN316C4R	. NUT (AP)	6	
- 9		RX20841	. CLOSURE ASSY, Cartridge, hypergol	1	
-10		AN6230-6	. GASKET	1	
-11		RX20836	. PLATE ASSY, LOX bleed line	1	
		NAS501-4-11	. BOLT (AP)	4	
		LD153-0010-0010	. WASHER (AP)	8	
		AN316C4R	. NUT (AP)	4	
-11A		RD265-2001-0008	. PLUG (Nitrogen purge overboard drain)	1	
-12		RK395-10026-011	. COVER ASSY, Bellows (Near side)	2	
-13		RK395-10026	. COVER ASSY, Bellows (Far side)	2	
-14		DELETED			
-15		RK395-10004-021	. PLATE ASSY, Fuel overboard drain	1	
		NAS501-4-12	. BOLT (AP)	4	
		LD153-0010-0010	. WASHER (AP)	8	
		AN316C4R	. NUT (AP)	4	
-16		DELETED			
-17		RK395-10065	. COVER ASSY, Bellows	2	
-18		RK395-10034-011	. CLOSURE ASSY, Thrust chamber	1	
-19		RX20700-11	. CLOSURE ASSY, Thrust chamber throat (For inter- and intra-plant use only)	1	
-20		G4089	. CLOSURE ASSY, Security thrust chamber throat (Use during shipment to the customer only)	1	
-21		RX20865	. COVER ASSY, Exterior, thrust chamber (For inter- and intra-plant use only)	1	
-21		G4048	. COVER ASSY, Protective, thrust chamber (Use during shipment to the customer only)	1	
-21A		DELETED			
-22		RK395-10100	. PROTECTOR, Stud, thrust chamber	119	
-23		425	. TAPE (2 IN and 4 IN. widths) (MFD by 76381)	AR	
		S13950122RKI 001	PLUG ASSY, Port, igniter, gas generator	1	
-24		ST3950122RKI 003	. . PLUG, Port, igniter, gas generator (Plug MS9015-08 may be used as an alternate)	2	
-25		ST3950122RKI 005	. . STREAMER, Port, igniter, gas generator	2	
-26		651912-3	. . GASKET, igniter, high voltage, copper crush (NHA 651949-11) (Gasket AN301-8C may be used as an alternate with plug MS9015-08)	2	
-27		NAS-2600(1-1	. BOOT, Gimbal (Gimbal bearing boot) (See figure 4, index 175, and figure 6, index 175, for RFQMT)	REF	
-28		MS9575-08	. SCREW	30	
-29		LD153-0010-0010	. WASHER	72	
		RD265-5018-0004	. CAP, Protective closure, plastic (Used on adapter assy, caliper, check, interface panel) (Uninstalled engines)	1	

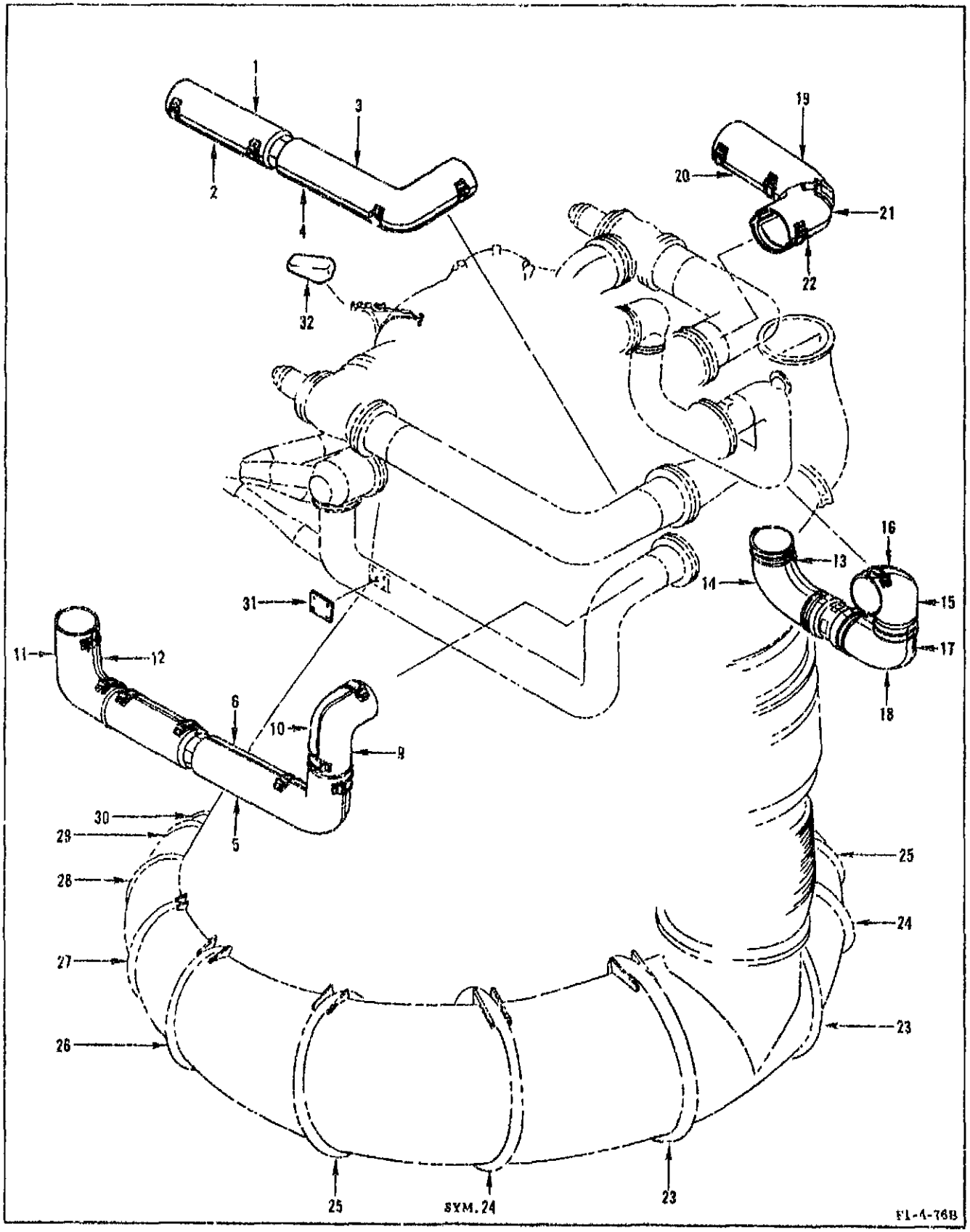

Figure 41. Engine Thrust Chamber Manifold and Propellant Duct Closures

FIG & INDEX NO	ZONE NO	PART NUMBER	DESCRIPTION 1 2 3 4 5 6 7	UNITS PER ASSY	USABLE ON CODE
41-		RK395-00024	ENGINE THRUST CHAMBER MANIFOLD AND PROPELLANT DUCT CLOSURES . . . (See figure 1 for REQMT)	REF	
- 1		ST3950010RKL011	. COVER ASSY, Protective, NO 1 oxidizer duct (Used on engines . . . . . F-2056 and SUBS)	1	
- 2		ST3950010RKL012	. COVER ASSY, Protective, NO 1 oxidizer duct (Used on engines . . . . . F-2056 and SUBS)	1	
- 3		ST3950010RKL021	. COVER ASSY Protective, NO. 1 oxidizer duct (Alternate ST3990011RKL001, . . . for inter- and intra plant use only) (Used on engines F-2056 and SUBS)		
- 4		ST3950010RKL022	. COVER ASSY, Protective, NO 1 oxidizer duct (Used on engines . . . . . F-2056 and SUBS)	1	
- 5		ST3950012RKL001	. COVER ASSY, Protective, NO. 1 fuel duct (Alternate ST3990043RKL001, ... for inter- and intra- plant use only) (Used on engines F-2056 and SUBS)	1	
- 6		ST3950012RKL002	. COVER ASSY, Protective, NO 1 fuel duct (Used on engines . . . . . F-2056 and SUBS)	1	
		ST3950017RKL005	. BELT, Drive (AP)	4	
		ST3950018RKL002	. HOOK, Protective cover, duct (AP)	8	
		ST3950019RKL003	. ANGLE, Protective cover, duct (AP)	4	
		1050-420-10	. SCREW (MFD by 14497) (AP)	8	
		1050-420-12	. SCREW (MFD by 14497) (AP)	8	
		2000-420	. NUT (MFD by 14497) (AP)	16	
- 7		DELETED			
- 8		DELETED			
- 9		ST3950013RKL001	. COVER ASSY, Protective NO 1 fuel duct, pump end (Alternate . . . . . ST3990044RKL001, for inter- and intra- plant use only) (Used on engines F-2056 and SUBS)	1	
-10		ST3950013RKL002	. COVER ASSY, Protective, NO 1 fuel duct, pump end (Used on engines . . . . . F-2056 and SUBS)	1	
-11		ST3950011RKL001	. COVER ASSY, Protective, NO. 1 fuel duct	1	
-12		ST3950011RKL002	. COVER ASSY, Protective, NO. 1 fuel duct	1	
-13		ST3950023RKL001	. COVER ASSY, Protective NO. 2 fuel duct (Alternate ST3990046RKL001, ... for inter- and intra- plant use only) (Used on engines F-2056 and SUBS)	1	
-14		ST3950023RKL002	. COVER ASSY, Protective, NO 2 fuel duct (Used on engines . . . . . F-2056 and SUBS)	1	
-15		ST3950021RKL001	. COVER ASSY, Protective, NO. 2 fuel duct, pump end (Alternate . . . . . ST3950045RKL001, for inter- and intra- plant use only) (Used on engines F-2056 and SUBS)	1	
-16		ST3950021RKL002	. COVER ASSY, Protective, NO 2 fuel duct, pump end (Used on engines . . . . . F-2056 and SUBS)	1	
-17		ST3950022RKL001	. COVER ASSY, Protective, NO 2 fuel duct (Used on engines . . . . . F-2056 and SUBS)	1	
-18		ST3950022RKL002	. COVER ASSY, Protective, NO 2 fuel duct (Used on engines . . . . . F-2056 and SUBS)	1	
		ST3950017RKL005	. BELT, Drive (AP)	2	
		ST3950018RKL003	. HOOK, Protective cover duct (AP)	4	
		ST3950019RKL003	. ANGLE, Protective cover, duct (AP)	2	
		1050-420-10	. SCREW (MFD by 14497) (AP)	4	
		1050-420-12	. SCREW (MFD by 14497) (AP)	4	
		2000-420	. NUT (MFD by 14497) (AP)	8	
-19		ST3950020RKL021	. COVER ASSY, Protective NO. 2 oxidizer duct (Alternate ST3990042RK1001, . . . for inter- and intra- plant use only) (Used on engines F-2056 and SUBS)	1	
-20		ST3950020RKL022	. COVER ASSY, Protective, NO. 2 oxidizer duct (Used on engines . . . . . F-2056 and SUBS)	1	
-21		ST3950020RKL011	. COVER ASSY Protective, NO. 2 oxidizer duct (Used on engines . . . . . F-2056 and SUBS)	1	
-22		ST3950020RKL012	. COVER ASSY, Protective, NO 2 oxidizer duct (Used on engines . . . . . F-2056 and SUBS)	1	
		ST3950017RKL005	. BELT, Drive (AP)	3	
		ST3950018RKL003	. HOOK, Protective cover, duct (AP)	6	
		ST3950019RKL003	. ANGLE, Protective cover, duct (AP)	6	
		1050-420-10	. SCREW (MFD by 14497) (AP)	6	
		1050-420-12	. SCREW (MFD by 14497) (AP)	6	
		2000-420	. NUT (MFD by 14497) (AP)	12	
-23		ST3950116RKL019	. PROTECTOR, Omega joint (For inter- and intra-facility protection)	2	
-24		ST3950116RKL017	. PROTECTOR, Omega joint (For inter- and intra-facility protection)	2	
-25		ST3950116RKL015	. PROTECTOR, Omega joint (For inter- and intra-facility protection)	2	
-26		ST3950116RKL013	. PROTECTOR, Omega joint (For inter- and intra-facility protection)	2	
-27		ST3950116RKL009	. PROTECTOR Omega joint (For inter- and intra-facility protection)	2	
-28		ST3950116RKL007	. PROTECTOR, Omega joint (For inter- and intra-facility protection)	2	
-29		ST3950116RKL005	. PROTECTOR, Omega joint (For inter- and intra-facility protection)	2	
-30		ST3950116RKL003	. PROTECTOR Omega joint (For inter- and intra-facility protection)	2	
-31		RK395-10072-011	. PLATE ASSY	2	
		NAS501-12-10A	. BOLT (AP)	4	
		LD153-0010-0024	. WASHER (AP)	4	
-32		RK395-38040	. PAD, Support, duct, hydraulic	1	

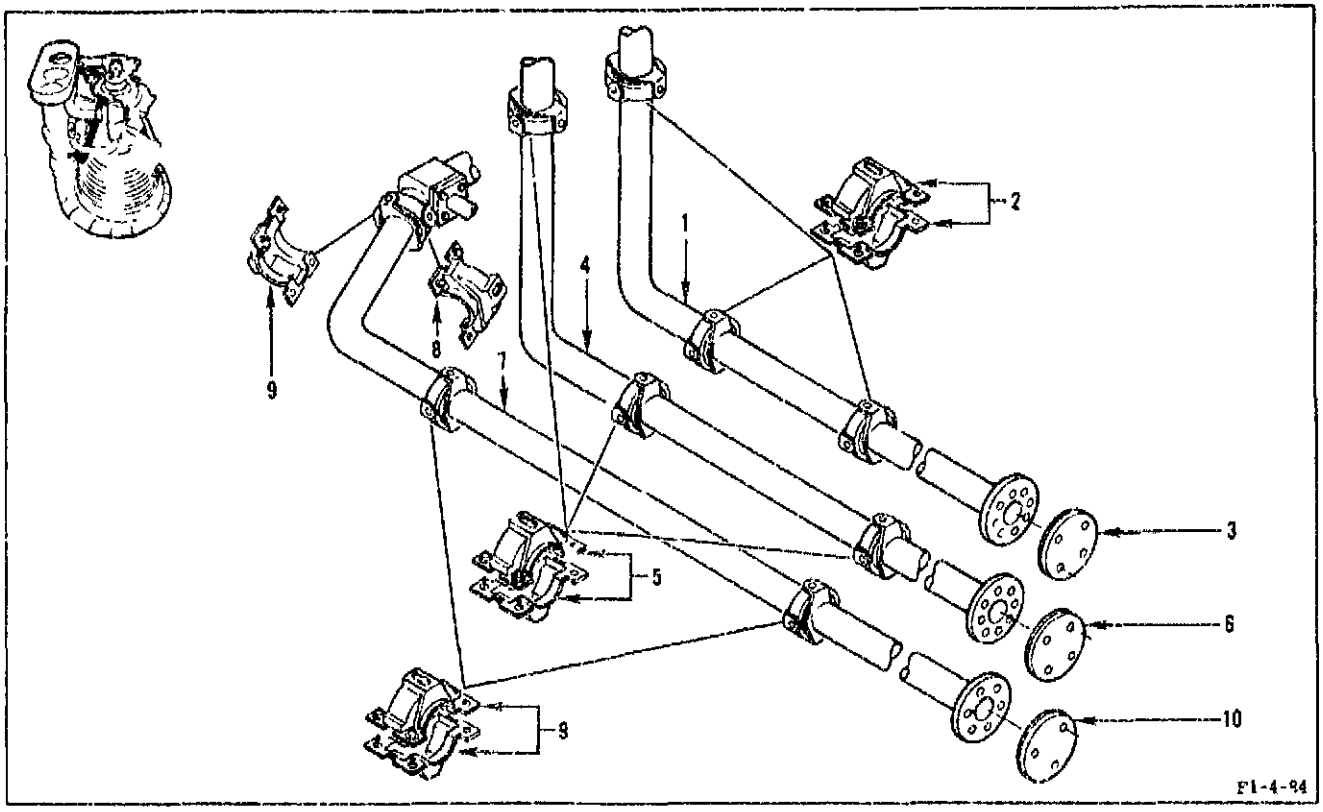

Figure 42. Engine Pressurization Duct Closures

FIG & INDEX NO	ZONE NO	PART NUMBER	DESCRIPTION 1 2 3 4 5 6 7	UNITS PER ASSY	USABLE ON CODE
42-		RK395-00024	ENGINE PRESSURIZATION DUCT CLOSURES (See figure 1 for REQMT)	REF	
- 1		406069	. DUCT ASSY, GOX return, heat exchanger end	REF	
- 1		406069-11	. DUCT ASSY, GOX return, heat exchanger end	REF	
- 1		406069-21	. DUCT ASSY, GOX return, heat exchanger end	REF	
- 1		406069-31	. DUCT ASSY, GOX return, heat exchanger end	REF	
- 2		ST3950165RKL001	. . CLOSURE ASSY, Gimbal retainer (Alternate RK395-10033-011)	6	
		AN3-3	. . BOLT (AP)	4	
		LD153-0010-0008	. . WASHER (AP)	8	
		MS35426-13	. . NUT (AP)	4	
- 3		RK395-10002-011	. . PLATE ASSY, Round	1	
		NAS501-5-12	. . BOLT (AP)	4	
		LD153-0010-0012	. . WASHER (AP)	8	
		AN316C5R	. . NUT (AP)	4	
- 4		406840	. DUCT ASSY, Helium return, heat exchanger end	REF	
- 4		406087	. DUCT ASSY, Helium return, heat exchanger end	REF	
- 5		ST3950164RKL001	. . CLOSURE ASSY, Gimbal retainer (Alternate RK395-10032-051)	6	
		AN3-3	. . BOLT (AP)	4	
		LD153-0010-0009	. . WASHER (AP)	8	
		MS35426-13	. . NUT (AP)	4	
- 6		RK395-10002-011	. . PLATE ASSY, Round	1	
		NAS501 5-11	. . BOLT (AP)	4	
		LD153-0010-0012	. . WASHER (AP)	8	
		AN316C5R	. . NUT (AP)	4	
- 7		406629-11	. DUCT ASSY, Helium supply, heat exchanger end	REF	
- 7		406068	. DUCT ASSY, Helium supply, heat exchanger end	REF	
- 8		ST3950164RKL021	. . CLOSURE ASSY, Gimbal retainer (Alternate RK395-10032-051)	1	
- 9		ST3950164RKL011	. . CLOSURE ASSY, Gimbal retainer (Alternate RK395-10032-041)	5	
		AN3-3	. . BOLT (AP)	4	
		LD153-0010-0008	. . WASHER (AP)	8	
		MS35426-13	. . NUT (AP)	4	
-10		RK395-10023-021	. . PLATE ASSY, Round	1	
		NAS501-5-1.	. . BOLT (AP)	3	
		LD153-0010-0012	. . WASHER (AP)	6	
		AN316C5R	. . NUT (AP)	2	

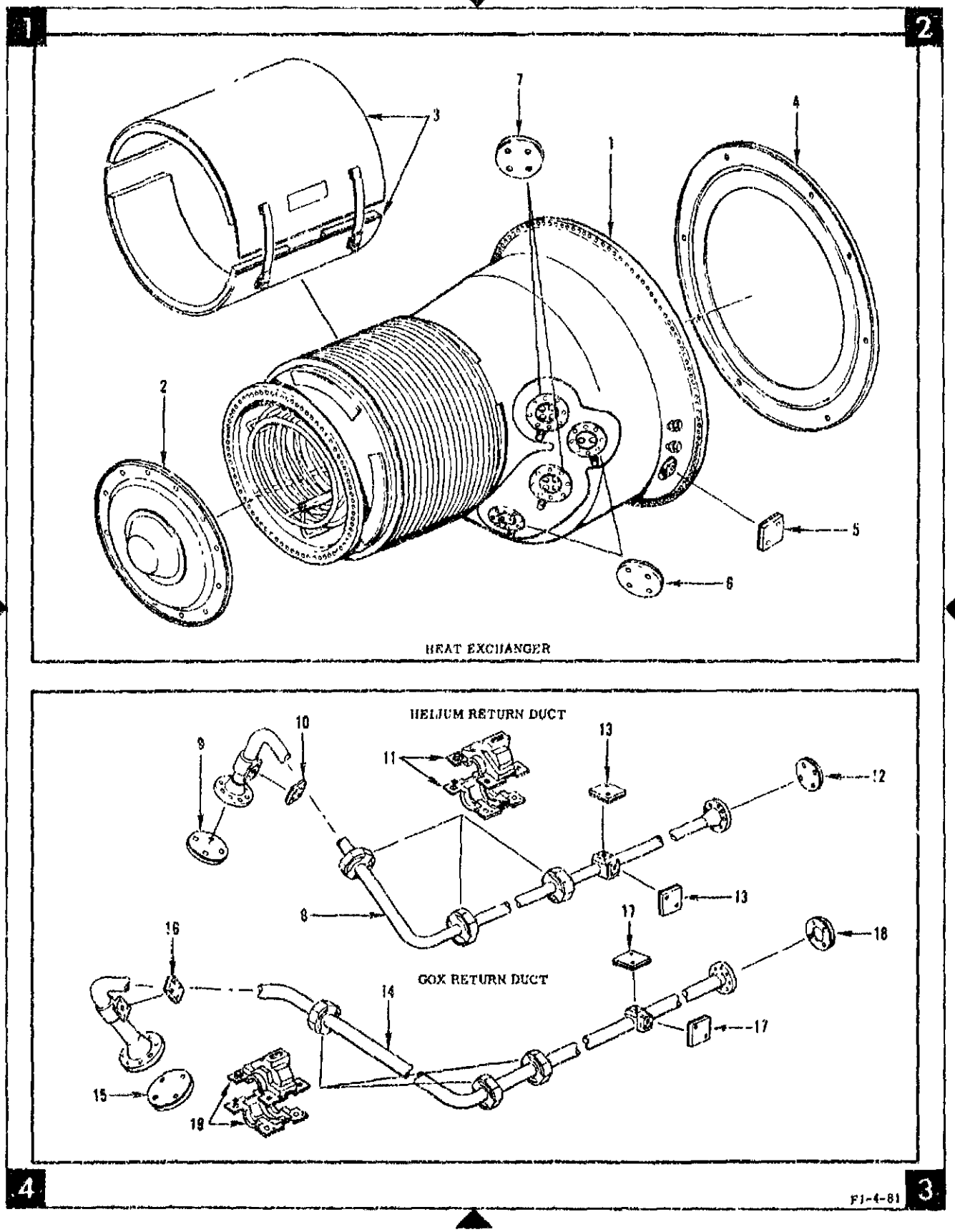

Figure 43. Pressurization Heat Exchanger, Oxidizer Flowmeter, and Duct Closures (Sheet 1 of 2)

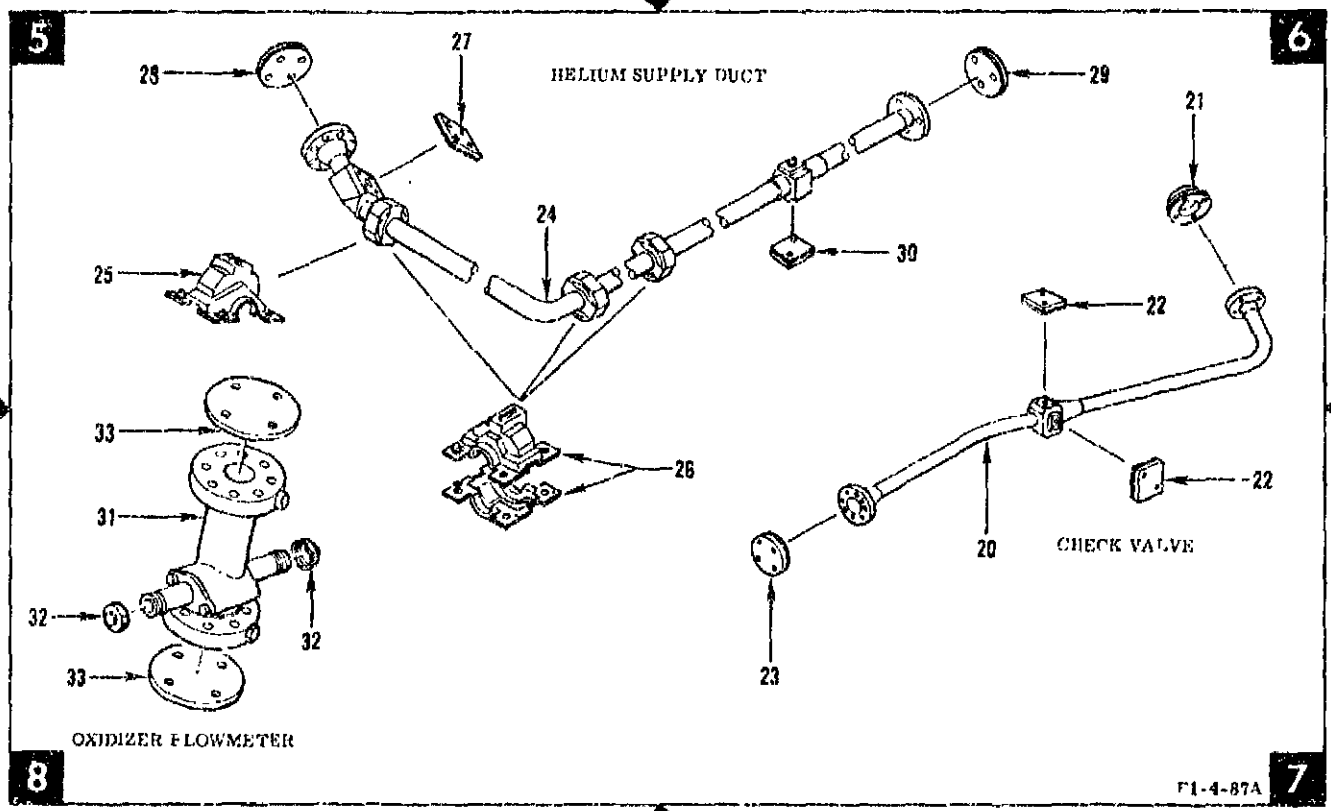

Figure 43. Pressurization Heat Exchanger, Oxidizer Flowmeter, and Duct Closures (Sheet 2 of 2)

FIG & INDEX NO	ZONE NO	PART NUMBER	DESCRIPTION 1 2 3 4 5 6 7	UNITS PER ASSY	USABLE ON CODE
43-		RK395-00024	PRESSURIZATION HEAT EXCHANGER AND DUCT CLOSURES (See figure 1 for REQMT)	REF	
		RK395-00032	. PROTECTIVE CLOSURE INSTL, Pressurization system	1	
- 1	2	308551-11	. . HEAT EXCHANGER ASSY	REF	
- 2	1	RX20842	. . . Closure Assy, Heat exchanger	1	
		NAS501-4-13	. . . Bolt (AP)	12	
		LD153-0010-0010	. . . Washer (AP)	24	
		AN316C4R	. . . Nut (AP)	12	
- 3	1	RK395-10065	. . . Cover Assy, Bellows	2	
- 4	2	RX20641	. . . Closure Assy, Turbine exhaust	1	
		NAS501-4-10	. . . Bolt (AP)	8	
		LD153-0010-0010	. . . Washer (AP)	16	
		AN316C4R	. . . Nut (AP)	8	
- 5	2	RK395-44062-011	. . . Plate Assy, Rectangular	1	
		NAS501-4H6A	. . . Bolt (AP)	2	
		LD153-0010-0010	. . . Washer (AP)	2	
- 6	2	RK395-44060-021	. . . Plate Assy, Round	2	
		NAS501-5H6A	. . . Bolt (AP)	4	
		LD153-0010-0012	. . . Washer (AP)	4	
- 7	2	RK395-44060-031	. . . Plate Assy Round	2	
		NAS501-6H6A	. . . Bolt (AP)	4	
		LD153-0010-0014	. . . Washer (AP)	4	
- 8	4	406640	. . DUCT ASSY, Helium return, heat exchanger end	REF	
- 8	4	406067	. . DUCT ASSY, H lium return, heat exchanger end	REF	
- 9	4	RX20610-361 (a)	. . . Plate Assy	1	
		NAS501 5-15	. . . Bolt (AP)	4	
		LD153 0010-0012	. . . Washer (AP)	8	
		AN316C5R	. . . Nut (AP)	4	
-10	4	RX20673-41	. . . Plate Assy	1	
		MS35276-230	. . . Screw (AP)	4	
		LD153-0010-0010	. . . Washer (AP)	4	

(a) See figure 61 for Alternate Closure Installation on line flanges 6 inches or less.

FIG. & INDEX NO	ZONE NO.	PART NUMBER	DESCRIPTION 1 2 3 4 5 6 7	UNITS PER ASSY	USABLE ON CODE
43-11	4	ST3950164RKL001	. . . Closure Assy, Gimbal retainer (Alternate RK395-10032-031)	6	
		AN3-3	. . . Bolt (AP)	4	
		LD153-0010-0008	. . . Washer (AP)	8	
		MS35426-13	. . . Nut (AP)	4	
-12	3	RK395-10002-011 (a)	. . . Plate Assy, Round	1	
		NAS501-5-11	. . . Bolt (AP)	4	
		LD153-0010-0012	. . . Washer (AP)	8	
		AN316C5R	. . . Nut (AP)	4	
-13	3	RX20660-33	. . . Plate Assy	2	
		MS35276-279	. . . Screw (AP)	2	
		LD153-0010-0010	. . . Washer (AP)	2	
-14	4	406069	. . DUCT ASSY, GOX return, heat exchanger end	REF	
-14	4	406069-11	. . DUCT ASSY, GOX return, heat exchanger end	REF	
-14	4	406069-21	. . DUCT ASSY, GOX return, heat exchanger end	REF	
-14	4	406069-31	. . DUCT ASSY, GOX return, heat exchanger end	REF	
-15	4	RX20610-371 (a)	. . . Plate Assy, Round	1	
		NAS501-5-21	. . . Bolt (AP)	4	
		LD153-0010-0012	. . . Washer (AP)	8	
		AN316C5R	. . . Nut (AP)	4	
-16	4	RX20673-41	. . . Plate Assy	1	
		MS35276-280	. . . Screw (AP)	4	
		LD153-0010-0010	. . . Washer (AP)	4	
-17	3	RX20660-33	. . . Plate Assy	2	
		MS35276-279	. . . Screw (AP)	2	
		LD153-0010-0010	. . . Washer (AP)	2	
-18	3	RK395-10002-011 (a)	. . . Plate Assy, Round	1	
		NAS501-5-12	. . . Bolt (AP)	4	
		LD153-0010-0012	. . . Washer (AP)	8	
		AN316C5R	. . . Nut (AP)	4	
-19	4	ST3950165RKL001	. . . Closure Assy, Gimbal retainer (Alternate RK395-10033-011)	6	
		AN3-3	. . . Bolt (AP)	4	
		LD153-0010-0008	. . . Washer (AP)	8	
		MS35426-13	. . . Nut (AP)	4	
-20	7	407840	. . VALVE ASSY, Check, heat exchanger	REF	
-20	7	407870	. . VALVE ASSY, Check, heat exchanger	REF	
-21	6	RK395-10001 (a)	. . . Closure Assy, Round	1	
		NAS501-5-10	. . . Bolt (AP)	4	
		LD153-0010-0012	. . . Washer (AP)	8	
		AN316C5R	. . . Nut (AP)	4	
-22	6, 7	RX20660-33	. . . Plate Assy	2	
		MS35276-279	. . . Screw (AP)	2	
		LD153-0010-0010	. . . Washer (AP)	2	
-23	7	RX20868-171 (a)	. . . Plate Assy	1	
		NAS501-5-14	. . . Bolt (AP)	4	
		LD153-0010-0012	. . . Washer (AP)	8	
		AN316C5R	. . . Nut (AP)	4	
-24	5	406629-11	. . DUCT ASSY, Helium supply, heat exchanger end	REF	
-24	5	406068	. . DUCT ASSY, Helium supply, heat exchanger end	REF	
-25	8	ST3950164RKL021	. . . Closure Assy, Gimbal retainer (Alternate RK395-10032-051)	1	
-26	8	ST3950164RKL011	. . . Closure Assy, Gimbal retainer (Alternate RK395-10032-041)	5	
		AN3-3	. . . Bolt (AP)	4	
		LD153-0010-0008	. . . Washer (AP)	8	
		MS35426-13	. . . Nut (AP)	4	
-27	5	RX20673-41	. . . Plate Assy	1	
		MS35276-280	. . . Screw (AP)	4	
		LD153-0010-0010	. . . Washer (AP)	4	
-28	5	RX20610-361 (a)	. . . Plate Assy	1	
		NAS501-5-15	. . . Bolt (AP)	4	
		LD153-0010-0012	. . . Washer (AP)	8	
		AN316C5R	. . . Nut (AP)	4	
-29	6	RK395-10023-021 (a)	. . . Plate Assy, Round	1	
		NAS501-5-11	. . . Bolt (AP)	3	
		LD153-0010-0012	. . . Washer (AP)	6	
		AN316C5R	. . . Nut (AP)	3	
-30	7	RX20660-33	. . . Plate Assy	1	
		MS35276-279	. . . Screw (AP)	2	
		LD153-0010-0010	. . . Washer (AP)	2	
-31		NA5-27299T2	. . TRANSDUCER, Liquid oxygen, volumetric liquid flow (Oddizer flowmeter) (Tap F16) (J132)	REF	
-32		RK265-5002-3004	. . . Cap	2	
-33		RX20868-171 (a)	. . . Plate Assy	2	
		NAS501-5-14	. . . Bolt (AP)	4	
		LD153-0010-0012	. . . Washer (AP)	8	
		AN316C5R	. . . Nut (AP)	4	

(a) See figure 61 for Alternate Closure Installation on line flanges 6 inches or less.

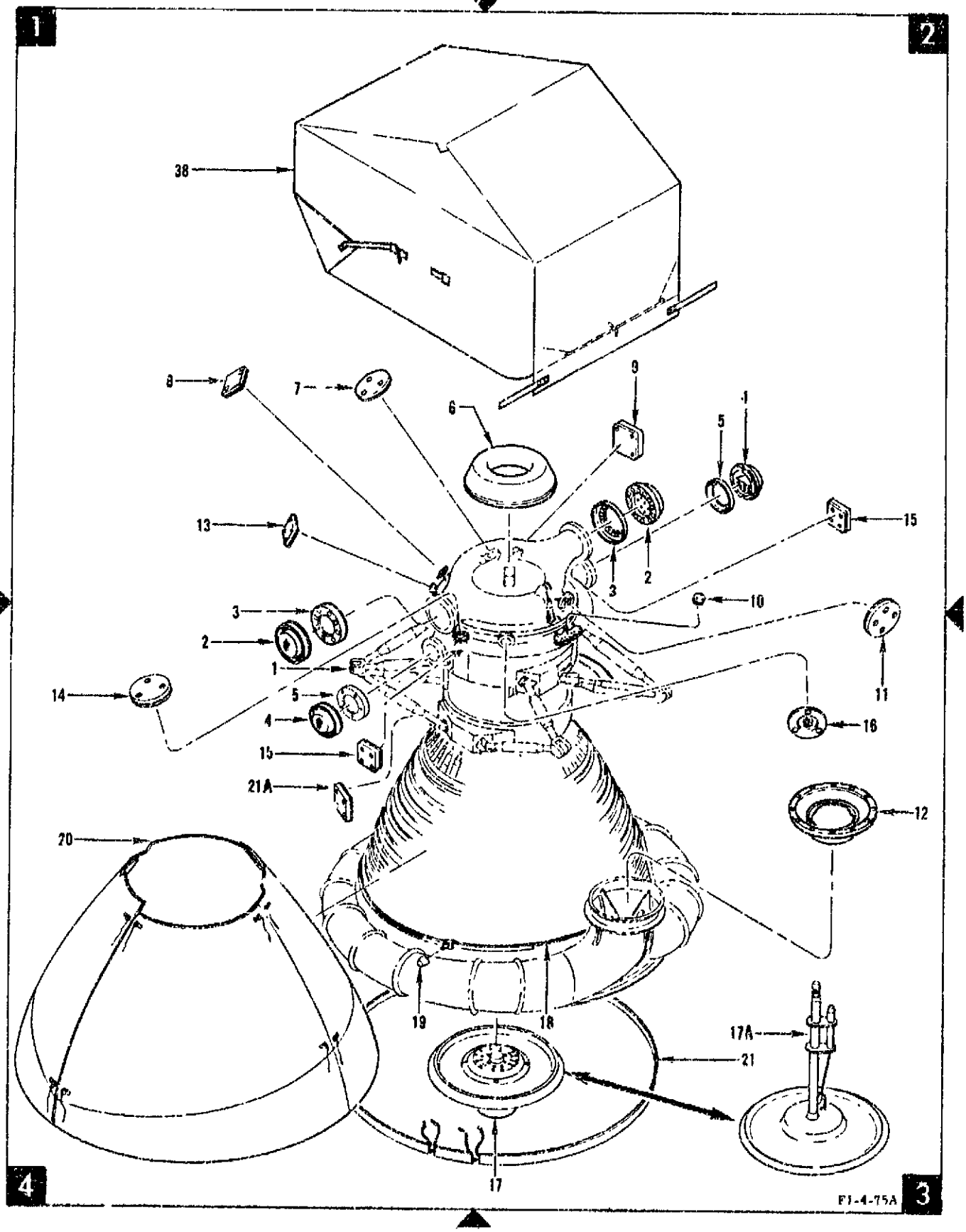

Figure 44. Thrust Chamber Closures (Sheet 1 of 3)

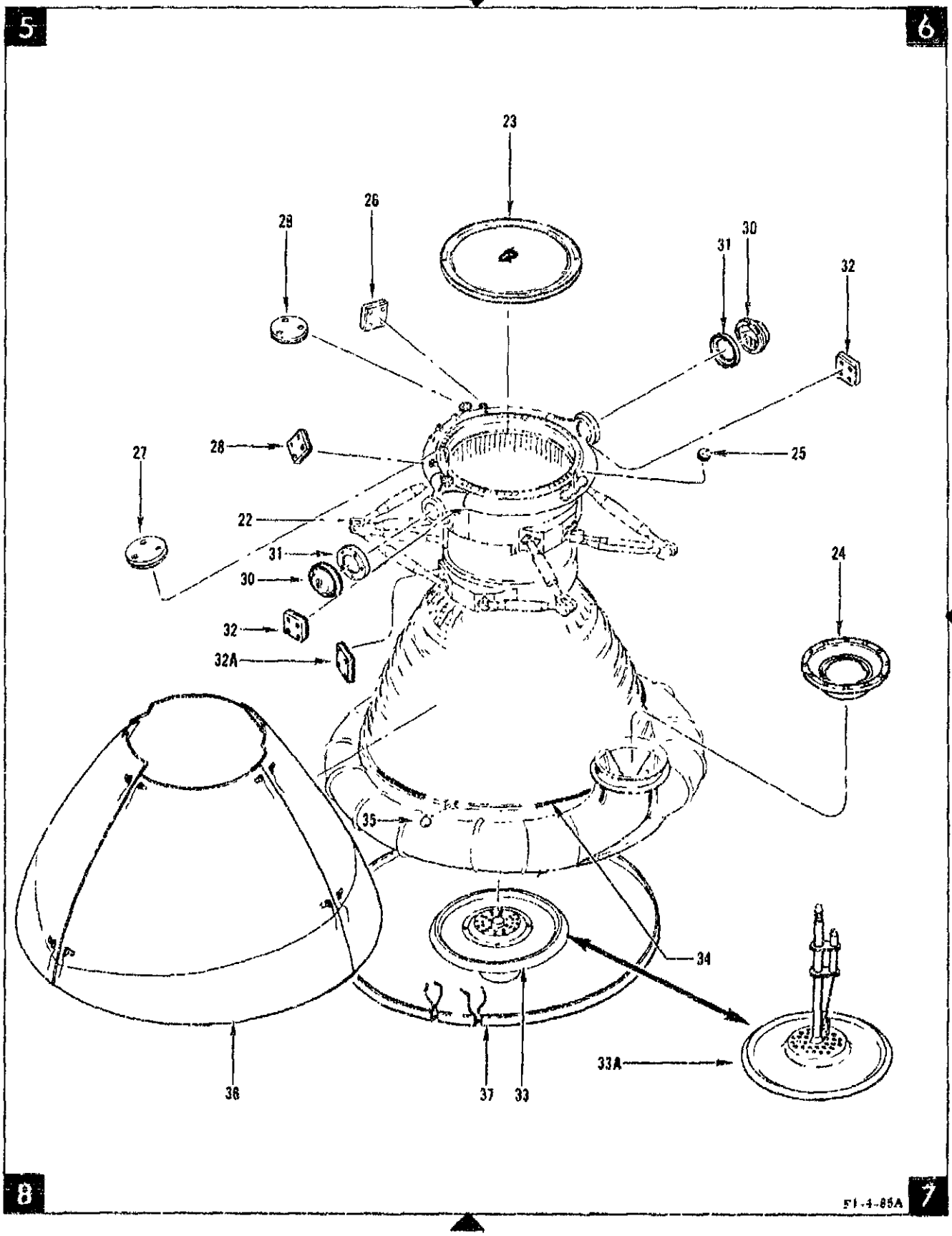

Figure 44. Thrust Chamber Closures (Sheet 2 of 3)

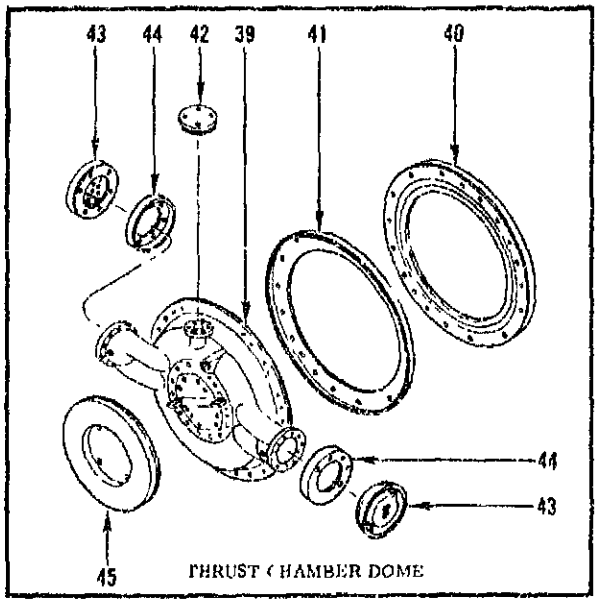

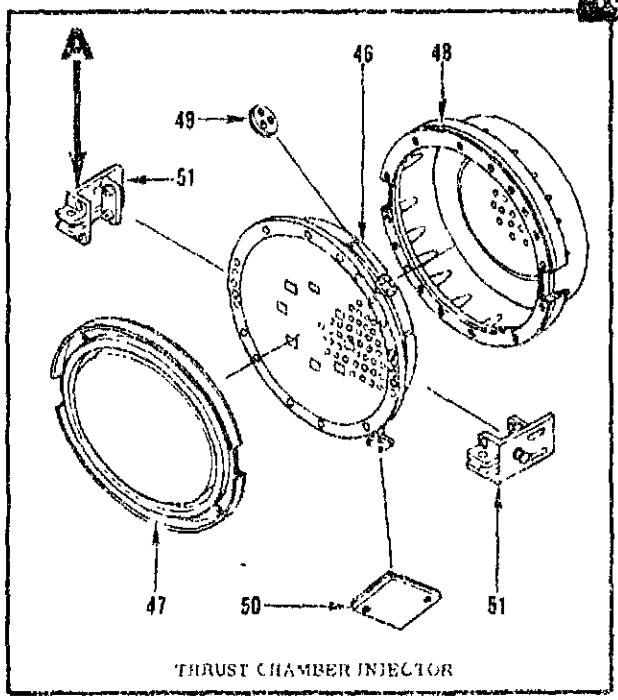

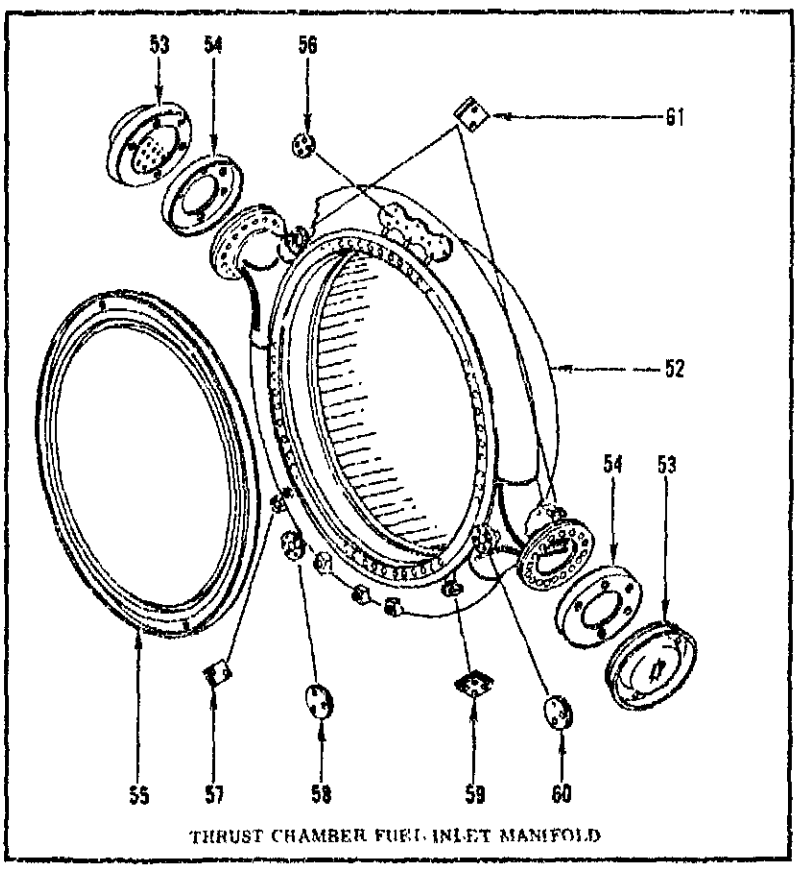

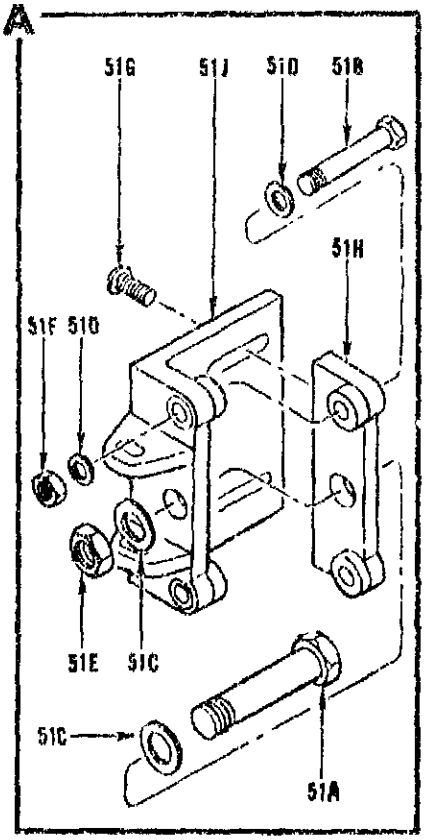

F1-4-80B

Figure 44. Thrust Chamber Closures (Sheet 3 of 3)

FIG & INDEX NO	ZONE NO	PART NUMBER	DESCRIPTION 1 2 3 4 5 6 7	UNITS PER ASSY	USABLE ON CODE
44-		RK395-00024	THRUST CHAMBER CLOSURES (See figure 1 for REQMT)	REF	
		RK395-00036	. PROTECTIVE CLOSURE INSTL, Thrust chamber	1	
- 1	4	209201-41	. . THRUST CHAMBER ASSY	REF	
- 1	4	209401-51	. . THRUST CHAMBER ASSY	REF	
- 1	4	209201-61	. . THRUST CHAMBER ASSY	REF	
- 1	4	209401-71	. . THRUST CHAMBER ASSY	REF	
- 1	4	209201-31	. . THRUST CHAMBER ASSY	REF	
- 1	4	209201-91	. . THRUST CHAMBER ASSY	REF	
- 1	4	209201-101	. . THRUST CHAMBER ASSY	REF	
- 1	4	209201-111	. . THRUST CHAMBER ASSY	REF	
- 1	4	209201-121	. . THRUST CHAMBER ASSY	REF	
- 2	2,4	RX20615-11	. . . Closure Assy, LOX pump discharge	2	
- 3	2,4	RX20697-19	. . . Ring, Flange protector, extruded	2	
		NAS501-10-17	. . . Bolt (AP)	6	
		LD153-0010-0022	. . . Washer (AP)	12	
		AN316C10R	. . Nut (AP)	6	
- 4	2,4	RX20640-11	. . . Closure Assy, Fuel discharge	2	
- 5	2,4	RX20697-23	. . . Ring, Flange protector, extruded	2	
		NAS501-10-15	. . . Bolt (AP)	5	
		LD153-0010-0022	. . . Washer (AP)	10	
		AN316C10R	. . . Nut (AP)	5	
- 6	1	RX20806	. . . Closure Assy, Gimbal mount	1	
		NAS501-14H11A	. . . Bolt (AP)	4	
		LD153-0010-0026	. . . Washer (AP)	4	
- 7	1	RX20868-41	. . . Plate Assy	1	
		MS35276-279	. . . Screw (AP)	3	
		LD153-0010-0010	. . . Washer (AP)	3	
- 8	1	RX20660-45	. . . Plate Assy	1	
		NAS501-3-12	. . . Bolt (AP)	2	
		LD153-0010-0006	. . . Washer (AP)	4	
		AN121526	. . . Nut (AP)	2	
- 9	2	RX20660-57	. . . Plate Assy	1	
		NAS501-4-10	. . . Bolt (AP)	2	
		LD153-0010-0010	. . . Washer (AP)	4	
		AN316C4R	. . . Nut (AP)	2	
-10	2	RX20610-161	. . . Plate Assy	3	
		MS35276-279	. . . Screw (AP)	3	
		MS35276-307	. . . Screw (AP)	3	
		LD153-0010-0010	. . . Washer (AP)	3	
		LD153-0010-0014	. . . Washer (AP)	3	
-11	3	RX20610-211	. . . Plate Assy	1	
		NAS501-5-13	. . . Bolt (AP)	4	
		LD153-0010-0012	. . . Washer (AP)	8	
		AN316C5R	. . . Nut (AP)	4	
-12	3	RX20682	. . . Closure Assy, Preservation and packaging, turbine exhaust nozzle	1	
		NAS501-4-10	. . . Bolt (AP)	12	
		LD153-0010-0010	. . . Washer (AP)	24	
		AN316C4R	. . . Nut (AP)	12	
-13	1	RX20660-59	. . . Plate Assy	1	
		NAS501-4-12	. . . Bolt (AP)	4	
		LD153-0010-0010	. . . Washer (AP)	8	
		AN316C4R	. . . Nut (AP)	4	
-14	4	RX20645	. . . Plate Assy, Preservation and packaging, combustor	1	
		NAS501-4-11	. . . Bolt (AP)	3	
		LD153-0010-0010	. . . Washer (AP)	6	
		AN316C4R	. . . Nut (AP)	3	
-15	2,4	RK395-10004	. . . Plate Assy	2	
		MS35276-295	. . . Screw (AP)	2	
		LD153-0010-0012	. . . Washer (AP)	2	
-16	3	RX20658-11	. . . Closure Assy, Preservation and packaging turbine inlet	1	
		NAS501-3-11	. . . Bolt (AP)	3	
		LD153-0010-0008	. . . Washer (AP)	6	
		AN121526	. . . Nut (AP)	3	
-17	3	RX20700-11	. . . Closure Assy, Thrust chamber throat (For inter- and intra-plant use only)	1	
-17A	3	G4089	. . . Closure Assy, Security, thrust chamber throat (Use during shipment to the customer only)	1	
-18	3	425	. . . Tape (2 IN. and 4 IN. widths) (MFD by 76381)	AR	
-19	4	RK395-10100	. . . Protector, Stud, thrust chamber	119	
-20	4	RX20665	. . . Cover Assy, Exterior, thrust chamber (For inter- and intra-plant use only)	1	
-20	4	G4048	. . . Cover Assy, Protective, thrust chamber (Use during shipment to the customer only)	1	
-21	3	RK395-40034-011	. . . Closure Assy, Thrust Chamber (Alternate RX20667)	1	
-21A	4	RK395-10072-011	. . . Plate Assy	2	
		NAS501-12-10A	. . . Bolt (AP)	4	
		LD153-0010-0024	. . . Washer (AP)	4	

FIG & INDEX NO	ZONE NO	PART NUMBER	DESCRIPTION 1 2 3 4 5 6 7	UNITS PER ASSY	USABLE ON CODE
44-22	5	209202-31	. . BODY ASSY, Thrust chamber	REF	
-22	5	209202-51	. . BODY ASSY, Thrust chamber	REF	
-22	5	209202-61	. . BODY ASSY, Thrust chamber	REF	
-22	5	209202-71	. . BODY ASSY, Thrust chamber	REF	
-22	5	209202-81	. . BODY ASSY, Thrust chamber	REF	
-22	5	209202-91	. . BODY ASSY, Thrust chamber	REF	
-22	5	209202-101	. . BODY ASSY, Thrust chamber	REF	
-22	5	209202 111	. . BODY ASSY, Thrust chamber	REF	
-23	6	RX20695	. . . Closure Assy, Preservation and packaging, dome	1	
		NAS601-12H10A	. . . Bolt (AP)	16	
		LD153-0010-0024	. . . Washer (AP)	16	
-24	6	RX20682	. . . Closure Assy, Preservation and packaging, turbine exhaust nozzle	1	
		NAS501-4-10	. . . Bolt (AP)	12	
		LD153-0010-0010	. . . Washer (AP)	24	
		AN316C4R	. . . Nut (AP)	12	
-25	6	RX20610-161	. . . Plate Assy	3	
		MS35276-279	. . . Screw (AP)	3	
		MS35276-307	. . . Screw (AP)	3	
		LD153-0010-0010	. . . Washer (AP)	3	
		LD153-0010-0014	. . . Washer (AP)	3	
-26	5	RX20660-57	. . . Plate Assy	1	
		NAS501-4-10	. . . Bolt (AP)	2	
		LD153-0010-0010	. . . Washer (AP)	4	
		AN316C4R	. . . Nut (AP)	2	
-27	5	RX20645	. . . Plate Assy, Preservation and packaging, combustor	1	
		NAS501-4-11	. . . Bolt (AP)	3	
		LD153-0010-0010	. . . Washer (AP)	6	
		AN316C4R	. . . Nut (AP)	3	
-28	5	RX20660-59	. . . Plate Assy	1	
		NAS501-4-12	. . . Bolt (AP)	4	
		LD153-0010-0010	. . . Washer (AP)	8	
		AN316C4R	. . . Nut (AP)	4	
-29	5	RX20868-41	. . . Plate Assy	1	
		MS35276-280	. . . Screw (AP)	3	
		LD153-0010-0010	. . . Washer (AP)	3	
-30	5,6	RX20640-11	. . . Closure Assy, Fuel discharge	2	
-31	5,6	RX20697-23	. . . Ring, Flange protector, extruded	2	
		NAS501-10-15	. . . Bolt (AP)	5	
		LD153-0010-0022	. . . Washer (AP)	10	
		AN316C10R	. . . Nut (AP)	5	
-32	6,8	RK395-10004	. . . Plate Assy	2	
		MS35276-295	. . . Screw (AP)	2	
		LD153-0010-0012	. . . Washer (AP)	2	
-32A	8	RK395-10072-011	. . . Plate Assy	2	
		NAS501-12-10A	. . . Bolt (AP)	4	
		LD153-0010-0021	. . . Washer (AP)	1	
-33	7	RX20700-11	. . . Closure Assy, Thrust chamber throat (For inter- and intra-plant use only)	1	
-33A	7	G4089	. . . Closure Assy, Security thrust chamber throat (Use during shipment to the customer only)	1	
-34	7	425	. . . Tape (2 IN. and 4 IN. widths) (MIL-D by 76381)	AR	
-35	8	RK395-10100	. . . Protector, Stud, thrust chamber	119	
-36	8	RX20665	. . . Cover Assy, Exterior, thrust chamber (For inter- and intra-plant use only)	1	
-36	8	G4048	. . . Cover Assy, Protective thrust chamber (Use during shipment to the customer only)	1	
-37	7	RK395-40034-011	. . . Closure Assy, Thrust chamber (Alternate RX20667)	1	
-38	1	RX20884	. . . Shroud Assy, Thrust chamber, upper (For vertical storage only)	2	
		RK395-00041	. PROTECTIVE CLOSURE INSTL, Dome	1	
-39	9	209250	. . DOME ASSY, Injector, thrust chamber (Oxidizer dome)	REF	
-39	9	209250-11	. . DOME ASSY, Injector, thrust chamber (Oxidizer dome)	REF	
-40	9	RK395-10061	. . . Closure Assy, Thrust chamber dome	1	
-41	9	RX20697-13	. . . Ring, Flange protector, extruded	1	
		NAS501-12-26	. . . Bolt (AP)	16	
		LD153-0010-0024	. . . Washer (AP)	32	
		MS9361-17	. . . Nut (AP)	16	
-42	9	RX20610-211	. . . Plate Assy	1	
		NAS501-5-13	. . . Bolt (AP)	4	
		LD153-0010-0012	. . . Washer (AP)	8	
		AN316C5R	. . . Nut (AP)	1	
-43	9	RX20615-11	. . . Closure Assy, LOX pump discharge	2	
-44	9	RX20697-19	. . . Ring, Flange protector extruded	2	
		NAS501-10 17	. . . Bolt (AP)	6	
		LD153-0010-0022	. . . Washer (AP)	12	
		MS9361-15	. . . Nut (AP)	6	
-45	9	RX20808	. . . Closure Assy, Gimbal mount	1	
		RD111-6001-1101	. . . Screw (AP)	4	

FIG & INDEX NO	ZONE NO	PART NUMBER	DESCRIPTION 1 2 3 4 5 6 7	UNITS PER ASSY	USABLE ON CODE
44-		RK395-00040	. PROTECTIVE CLOSURE INSTL, Injector	1	
-46	10	209741	. . PLATE ASSY, Baffled injector, 31 ring (Thrust chamber injector)	REF	
-45	10	209641-11	. . PLATE ASSY, Baffled injector, 31 ring (Thrust chamber injector)	REF	
-47	10	RK395-10061-011	. . . Closure Assy, Thrust chamber dome	1	
48	10	RX20825-41	. . . Closure Assy, Injector	1	
		NAS501-9 25A	. . . Bolt (AP)	16	
		LD153-0010-0020	. . . Washer (AP)	32	
		NAS509-9	. . . Nut (AP)	16	
-49	10	RX20058-11	. . . Closure Assy, Preservation and packaging, turbine inlet	1	
		NAS501-3-11	. . . Bolt (AP)	3	
		LD153-0010-0008	. . . Washer (AP)	6	
		AN121526	. . . Nut (AP)	3	
-50	10	RX20660-45	. . . Plate Assy	1	
		NAS501-3-12	. . . Bolt (AP)	2	
		LD153-0010-0008	. . . Washer (AP)	4	
		AN121526	. . . Nut (AP)	2	
-51	10	RX19149-11	. . . Adapter Assy, Sling	2	
-51A		AN10-26A	. . . Bolt (AP)	2	
-51B	11	AN5-24A	. . . Bolt (AP)	4	
-51C		RD153-5001-0010	. . . Washer (AP)	2	
-51D	1	RD153-5001-0005	. . . Washer (AP)	4	
-51E		RD114-1002-0010	. . . Nut (AP)	2	
-51F		RD114-1002-0005	. . . Nut (AP)	4	
-51G	11	DT35233-81	. . . . Screw (MFD by 03038)	2	
-51H		RX19140-11	. . . . Cover Assy, Sling, adapter bracket injector (Welded)	1	
-51J	11	RX10145-11	. . . Base Sling Assy, Adapter bracket, injector (Welded)	1	
		RK395-00006	. PROTECTIVE CLOSURE INSTL, Fuel inlet manifold	1	
-52	11	209708	. MANIFOLD ASSY, Fuel inlet	REF	
-53	9, 11	RX20640-11	. . . Closure Assy, Fuel discharge	2	
-54	9, 12	RX20887-23	. . . Ring, Flange protector, extruded	2	
		NAS501-10-15	. . . Bolt (AP)	5	
		LD153-0010-0022	. . . Washer (AP)	10	
		AN316C10R	. . . Nut (AP)	5	
-55	12	RX20695	. . . Closure Assy, Preservation and packaging, dome	1	
		NAS501-12H10A	. . . Bolt (AP)	16	
		LD153-0010-0024	. . . Washer (AP)	16	
-56	9	RX20610-101	. . . Plate Assy	3	
		MS35276-270	. . . Screw (AP)	3	
		MS35276-307	. . . Screw (AP)	3	
		LD153-0010-0010	. . . Washer (AP)	3	
		LD153-0010-0014	. . . Washer (AP)	3	
-57	12	RX20660-57	. . . Plate Assy	1	
		NAS501-4 10	. . . Bolt (AP)	2	
		LD153-0010-0010	. . . Washer (AP)	4	
		AN316C4R	. . . Nut (AP)	2	
58	12	RX20610-11	. . . Plate Assy	1	
		MS35276-279	. . . Screw (AP)	3	
		LD153-0010-0010	. . . Washer (AP)	3	
-59	12	RX20660-59	. . . Plate Assy	1	
		NAS501-4-12	. . . Bolt (AP)	4	
		LD153-0010-0010	. . . Washer (AP)	8	
		AN316C4R	. . . Nut (AP)	4	
-60	12	RX20645	. . . Plate Assy, Preservation and packaging, combustor	1	
		NAS501-4-11	. . . Bolt (AP)	3	
		LD153-0010-0010	. . . Washer (AP)	6	
		AN316C4R	. . . Nut (AP)	3	
-61	11	RK395-10004	. . . Plate Assy	2	
		MS35276-295	. . . Screw (AP)	2	
		LD153-0010-0012	. . . Washer (AP)	2	

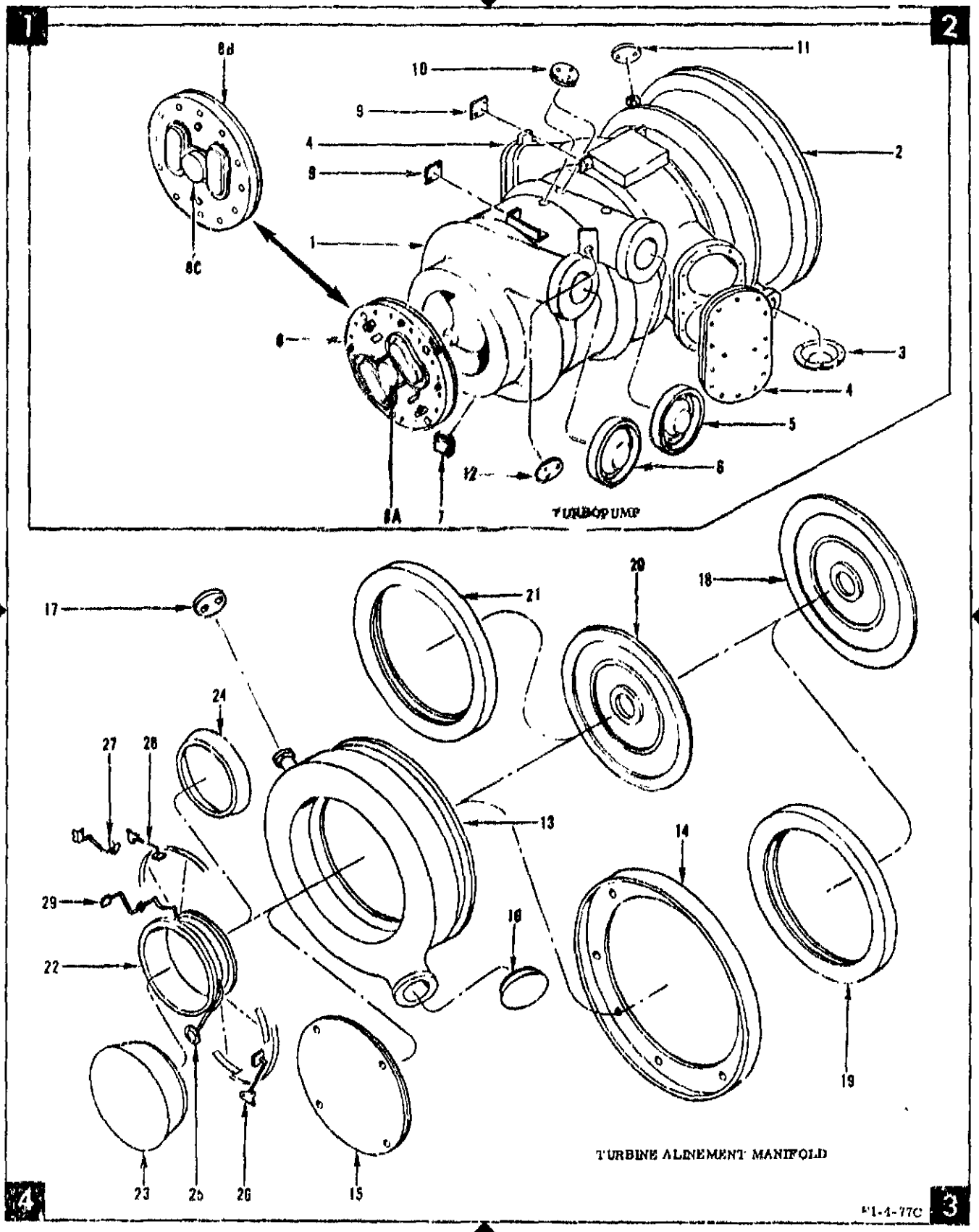

Figure 45. Turbopump Closures (Sheet 1 of 2)

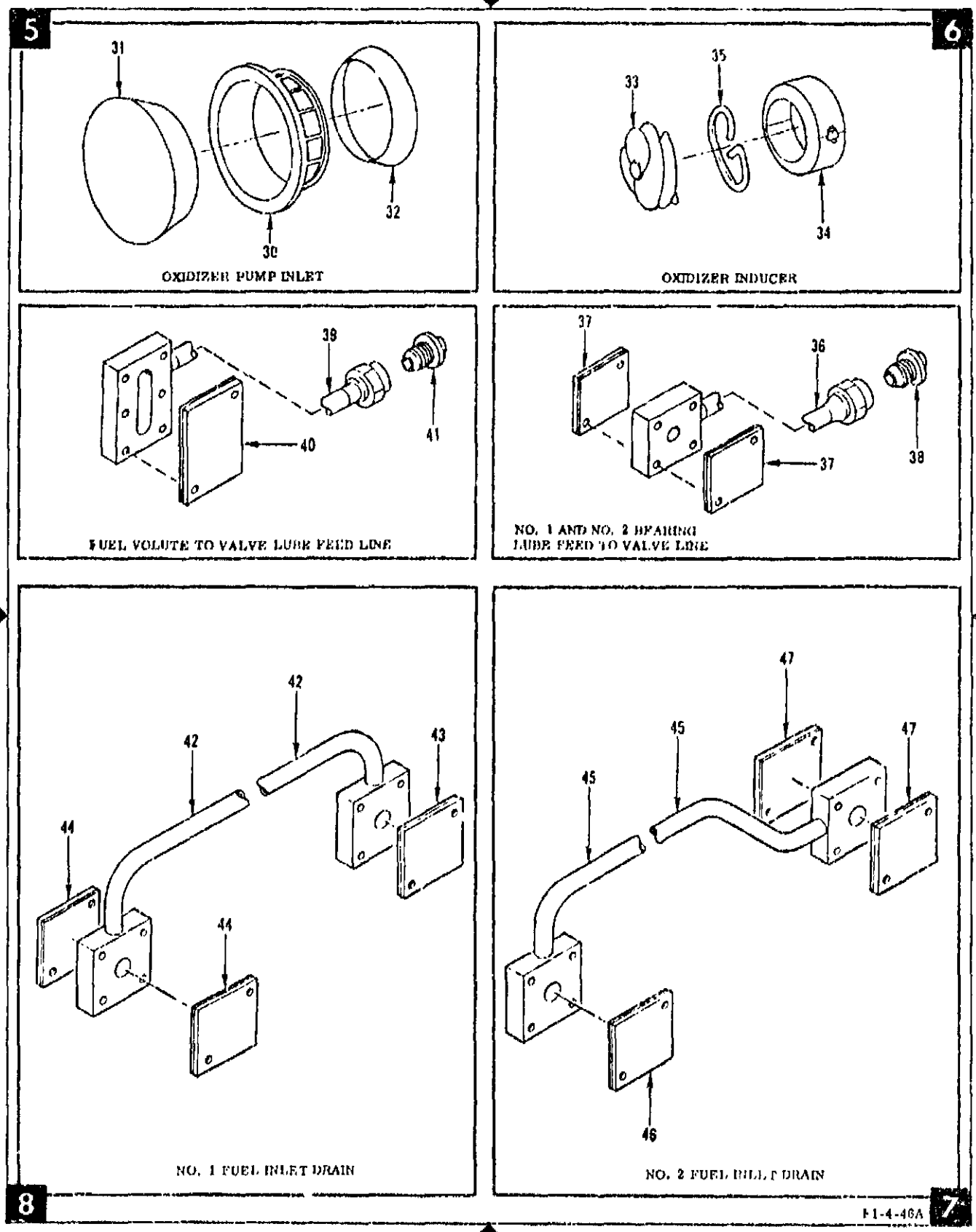

Figure 45. Turbopump Closures (Sheet 2 of 2)

FIG & INDEX NO	ZONE NO	PART NUMBER	DESCRIPTION 1 2 3 4 5 6 7	UNITS PER ASSY	USABLE ON CODE
45-		RK395-00024	TURBOPUMP CLOSURES (See figure 1 for REQMT)	REF	
		RK395-00039	. PROTECTIVE CLOSURES INSTL, Turbopump	1	
			PARTIAL BREAKDOWN FOLLOWS		
- 1	1	458800-131	. . TURBOPUMP ASSY	REF	
- 1	1	458800-141	. . TURBOPUMP ASSY	REF	
- 1	1	458800-161	. . TURBOPUMP ASSY	REF	
- 1	1	458800-171	. . TURBOPUMP ASSY	REF	
- 2	2	RX20641	. . . Closure Assy, Turbine Exhaust	1	
		NAS501-4-11	. . . Bolt (AP)	8	
		LD153-0010-0010	. . . Washer (AP)	16	
		AN316C4R	. . . Nut (AP)	8	
- 3	2	RX20643	. . . Closure Assy, Preservation and packaging, turbine inlet	1	
		NAS501-8-14	. . . Bolt (AP)	8	
		LD153-0010-0018	. . . Washer (AP)	16	
		AN316C8R	. . . Nut (AP)	8	
- 4	1,2	RK395-44016	. . . Plate Assy, Fuel inlet	2	
		NAS501-7-20	. . . Bolt (AP)	10	
		NAS501-7H5A	. . . Bolt (AP)	2	
		LD153-0010-0018	. . . Washer (AP)	22	
		AN316C7R	. . . Nut (AP)	10	
- 5	2	RX20640-11	. . . Closure Assy, Fuel discharge	2	
		NAS501-10-26	. . . Bolt (AP)	5	
		LD153-0010-0022	. . . Washer (AP)	10	
		AN316C10R	. . . Nut (AP)	5	
- 6	2	RX20645-11	. . . Closure Assy, LOX pump discharge	2	
		NAS501-10-26	. . . Bolt (AP)	6	
		LD153-0010-0022	. . . Washer (AP)	12	
		AN316C10R	. . . Nut (AP)	6	
- 7	1	RK395 10004-011	. . . Plate Assy	1	
		NAS501-4-10	. . . Bolt (AP)	4	
		LD153-0010-0010	. . . Washer (AP)	8	
		AN316C4R	. . . Nut (AP)	4	
- 8	1	RK395-44034-021	. . . Closure Assy, Oxidizer inlet (Turbopump oxidizer inlet)	1	FRB
		NAS1007-13H	. . . Bolt (AP)	12	FRB
		LD153-0010-0016	. . . Washer (AP)	12	FRB
- 8A	1	ST3950092RK1011	. . . . Cup Assy, Rotor clamp, turbopump shipping	1	FRB
		AN4-7A	. . . . Bolt (AP)	4	FRB
		LD153 0010-0010	. . . . Washer (AP)	4	FRB
- 8B	1	ST3950154RK1001	. . . Closure Assy, Oxidizer inlet (Turbopump oxidizer inlet) (Contains captive fasteners)	1	FRA
- 8C	1	ST3950173RK1001	. . . . Cup Assy, Closure, oxidizer inlet, turbopump (Turbopump oxidizer inlet) (NHA RK395-00024)	1	FRA
		AN4-7A	. . . . Bolt (AP)	4	FRA
		LD153 0010-0010	. . . . Washer (AP)	4	FRA
- 9	1	RX20660-33	. . . Plate Assy	2	
		AN501AD416-10	. . . Screw (AP)	2	
		LD153-0010-0010	. . . Washer (AP)	2	
-10	1	RX20610-111	. . . Plate Assy	4	
		MS35276-270	. . . Screw (AP)	2	
		LD153-0010-0010	. . . Washer (AP)	2	
-11	2	RX20610-31	. . . Plate Assy	1	
		NAS501-4-7	. . . Bolt (AP)	2	
		LD153-0010-0010	. . . Washer (AP)	4	
		AN316C4R	. . . Nut (AP)	2	
-12	1	RK395-10023-051	. . . Plate Assy, Round	1	
		MS35276-270	. . . Screw (AP)	3	
		LD153-0010-0010	. . . Washer (AP)	3	
-13	3	459537-11	. . MANIFOLD ASSY, Turbine-alinement	REF	
-13	3	460202	. . MANIFOLD ASSY, Turbine-alinement	REF	
-14	3	RK395-38039-003	. . . Protector, Flange	1	
		NAS501-4-11	. . . Bolt (AP)	8	
		LD153-0010-0010	. . . Washer (AP)	16	
		AN316C4R	. . . Nut (AP)	8	
-15	4	RX20808-121	. . . Plate Assy	1	
		NAS501-4-7	. . . Bolt (AP)	4	
		LD153 0010-0010	. . . Washer (AP)	8	
		AN316C4R	. . . Nut (AP)	4	
-16	3	RX20633-17	. . . Cover, Preservation and packaging	1	
-17	3	RX20610-31	. . . Plate Assy	1	
		NAS501-4-7	. . . Bolt (AP)	2	
		LD153-0010-0010	. . . Washer (AP)	4	
		AN316C4R	. . . Nut (AP)	2	
-18	2	457114	. . WHEEL ASSY, Second stage turbine	REF	
-19	3	RX20677-15	. . . Protector, turbine blade, molded	1	

FIG & INDEX NO.	ZONE NO	PART NUMBER	DESCRIPTION 1 2 3 4 5 6 7	UNITS PER ASSY	USABLE ON CODE
45-20	2	457089	. . WHEEL ASSY, first stage, turbine	REF	
-21	2	RX20677-17	. . . Protector, Turbine blade, molded	1	
-22	4	459164	. . SUPPORT ASSY, Bearing, turbine	REF	
-22	4	460984	. . SUPPORT ASSY, Bearing, turbine	REF	
-23	4	RX20633-27	. . . Cover, Preservation and packaging	1	
-24	4	RX20633-23	. . . Cover, Preservation and packaging	1	
-25	4	RX20610-31	. . . Plate Assy	1	
		AN501AD416-10	. . . Screw (AP)	2	
		LD153-0010-0010	. . . Washer (AP)	2	
-26	4	RK395-44003	. . . Support Assy, Lube hose	1	
		NAS1300C4T12	. . . Screw (AP)	2	
-27	4	RK395-44004	. . . Support Assy, Lube hose	1	
		NAS1300-4T12	. . . Screw (AP)	1	
-28	4	RK395-44003	. . . Support Assy, Lube hose	1	
		NAS1300-4T12	. . . Screw (AP)	2	
-29	4	RX20660-57	. . . Plate Assy	1	
		NAS501-4-12	. . . Bolt (AP)	2	
		LD153-0010-0010	. . . Washer (AP)	4	
		AN316C4R	. . . Nut (AP)	2	
-30	5	459748	. . INLET ASSY, Oxidizer pump	REF	
-31	5	RX20633-31	. . . Cover, Preservation and packaging	1	
-32	5	RX20633-27	. . . Cover, Preservation and packaging	1	
-33	6	459738	. . INDUCER ASSY, Oxidizer pump	REF	
-34	6	RK395-40040	. . . Cover Assy, Inducer	2	
-35	6	RK395-38038	. . . Guard, Protective, inducer blade	3	
-36	7	460982	. . TUBE ASSY, Valve to NO. 1 and NO. 2 bearings lube feed	REF	
-37	7	RX20660-57 (a)	. . . Plate Assy	2	
		NAS501-4-14	. . . Bolt (AP)	2	
		LD153-0010-0010	. . . Washer (AP)	4	
		AN316C4R	. . . Nut (AP)	2	
-38	7	RD265-2001-0005	. . . Plug	1	
-39	8	458777	. . TUBE ASSY, Fuel volute to valve, lube feed	REF	
-40	8	RK395-10011 (a)	. . . Closure Assy, Rectangular	1	
		NAS501-3-12	. . . Bolt (AP)	2	
		LD153-0010-0008	. . . Washer (AP)	4	
		AN121526	. . . Nut (AP)	2	
-41	8	RD265-2001-0003	. . . Plug	1	
-42		458780	. . TUBE ASSY, Inlet drain, NO. 1 fuel	REF	
-43		RX20660-33 (a)	. . . Plate Assy	1	
		NAS501-4-12	. . . Bolt (AP)	2	
		LD153-0010-0010	. . . Washer (AP)	4	
		AN316C4R	. . . Nut (AP)	2	
-44		RX20660-33 (a)	. . . Plate Assy	2	
		NAS501-4-14	. . . Bolt (AP)	2	
		LD153-0010-0010	. . . Washer (AP)	4	
		AN316C4R	. . . Nut (AP)	2	
-45		458790	. . TUBE ASSY, Inlet drain, NO. 2 fuel	REF	
-46		RX20660-33 (a)	. . . Plate Assy	1	
		NAS501-4-12	. . . Bolt (AP)	2	
		LD153-0010-0010	. . . Washer (AP)	4	
		AN316C4R	. . . Nut (AP)	2	
-47		RX20660-33 (a)	. . . Plate Assy	2	
		NAS501-4-14	. . . Bolt (AP)	2	
		LD153-0010-0010	. . . Washer (AP)	4	
		AN316C4R	. . . Nut (AP)	2	

(a) See figure 61 for Alternate Closure Installation on line flanges 6 inches or less.

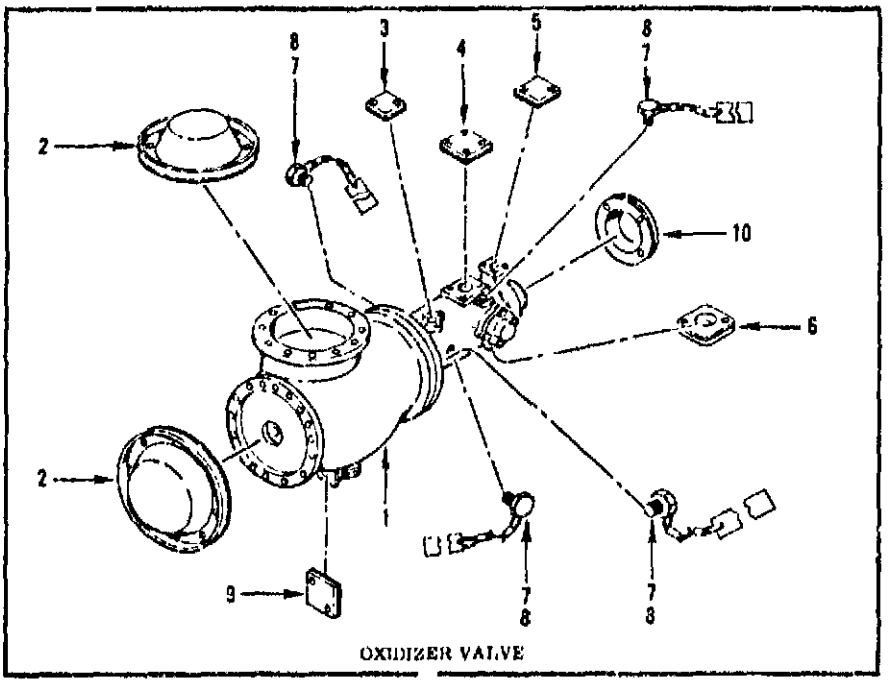

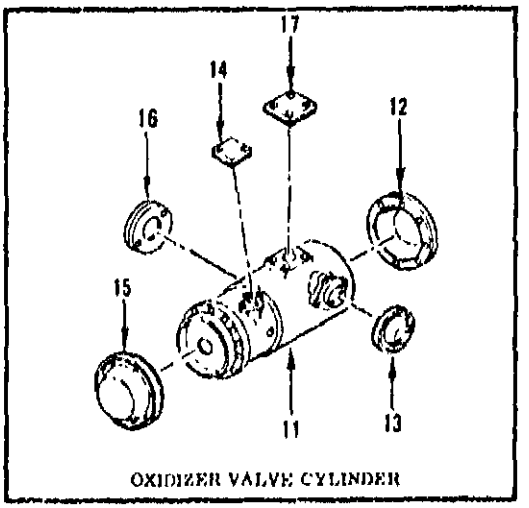

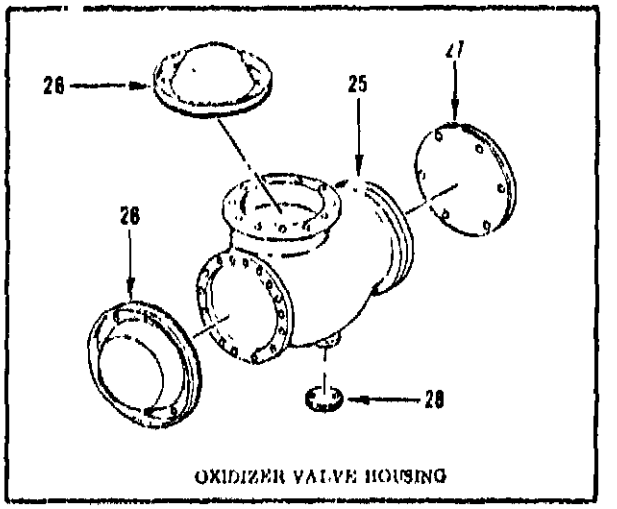

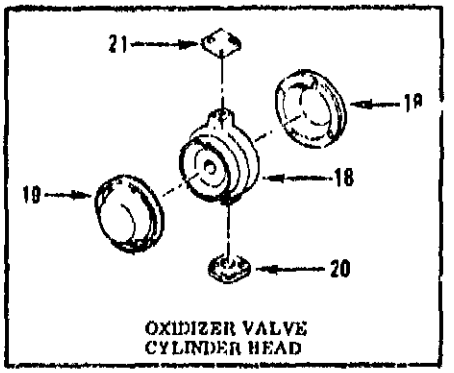

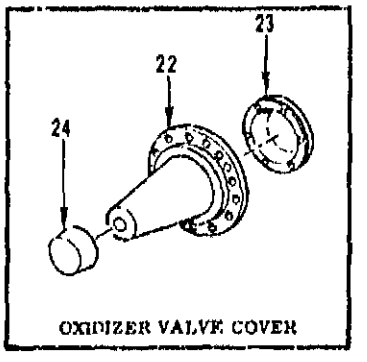

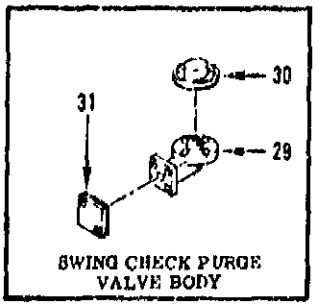

FI-4-86

Figure 46. Oxidizer Valve Closures

FIG & INDEX NO	ZONE NO	PART NUMBER	DESCRIPTION 1 2 3 4 5 6 7	UNITS PER ASSY	USABLE ON CODE
46-		RK395-00024	OXIDIZER VALVE CLOSURES (See figure 1 for REQMT)	REF	
		RK395-00035	. PROTECTIVE CLOSURE INSTL, Main LOX valve	1	
- 1		409465-21	. . VALVE ASSY, Oxidizer	REF	
- 1		409465-11	. . VALVE ASSY, Oxidizer	REF	
- 1		409465-31	. . VALVE ASSY, Oxidizer	REF	
- 2		RX20315-11	. . . Closure Assy, LOX pump discharge	2	
		NAS1010-3H	. . . Bolt (AP)	6	
		LD153-0013-0008	. . . Washer (AP)	6	
- 3		RX20660-9	. . . Plate Assy	1	
		AN501AD416-8	. . . Screw (AP)	2	
		LD153-0010-0010	. . . Washer (AP)	2	
- 4		RX20660-45	. . . Plate Assy	1	
		AN501AD416-8	. . . Screw (AP)	2	
		LD153-0010-0010	. . . Washer (AP)	2	
- 5		RX20660-29	. . . Plate Assy	1	
		AN501AD10-8	. . . Screw (AP)	2	
		LD153-0010-0008	. . . Washer (AP)	2	
- 6		RX20772-11	. . . Closure Assy	1	
		AN501AD416-8	. . . Screw (AP)	2	
		LD153-0010-0010	. . . Washer (AP)	2	
- 7		RX20845-21	. . . Closure Assy, LOX valve	4	
- 8		MS20512-04	. . . Packing	4	
- 9		RX20660-57	. . . Plate Assy	1	
		AN501AD416-8	. . . Screw (AP)	2	
		LD153-0010-0010	. . . Washer (AP)	2	
-10		RX20717-21	. . . Closure Assy	1	
		AN501AD416-28	. . . Screw (AP)	2	
		LD153-0010-0010	. . . Washer (AP)	4	
		AN316C4R	. . . Nut (AP)	2	
-11		408056	. . CYLINDER ASSY, Oxidizer valve	REF	
-12		RX20138	. . . Closure Assy, Preservation and packaging, gas generator valve	1	
		AN501AD616-10	. . . Screw (AP)	8	
		LD153-0010-0014	. . . Washer (AP)	8	
-13		RX20763	. . . Cover Assy, Oxidizer valve	1	
		AN500AD6-5	. . . Screw (AP)	2	
		LD153-0010-0004	. . . Washer (AP)	2	
-14		RX20660-9	. . . Plate Assy	1	
		AN501AD416-8	. . . Screw (AP)	2	
		LD153-0010-0010	. . . Washer (AP)	2	
-15		RX20717-31	. . . Closure Assy	1	
		NAS501-4-10	. . . Bolt (AP)	0	
		LD153-0010-0010	. . . Washer (AP)	12	
		AN316C4R	. . . Nut (AP)	6	
-16		RX20610-151	. . . Plate Assy	1	
		AN501AD10-8	. . . Screw (AP)	2	
		LD153-0010-0008	. . . Washer (AP)	2	
-17		RX20660-45	. . . Plate Assy	1	
		AN501AD416-8	. . . Screw (AP)	2	
		LD153-0010-0010	. . . Washer (AP)	2	
-18		405965	. . CYLINDER HEAD ASSY, Oxidizer valve	REF	
-18		405965-11	. . CYLINDER HEAD ASSY, Oxidizer valve	REF	
-19		RX20717-21	. . . Closure Assy	2	
		AN501AD416-28	. . . Screw (AP)	4	
		LD153-0010-0010	. . . Washer (AP)	8	
		AN316C4R	. . . Nut (AP)	4	
-20		RX20772-11	. . . Closure Assy	1	
		AN501AD416-8	. . . Screw (AP)	2	
		LD153-0010-0010	. . . Washer (AP)	2	
-21		RX20660-29	. . . Plate Assy	1	
		AN501AD10-8	. . . Screw (AP)	2	
		LD153-0010-0008	. . . Washer (AP)	2	
-22		408052	. . COVER ASSY, Main oxidizer valve	REF	
-23		RX20717-31	. . . Closure Assy	1	
		AN501AD616-10	. . . Screw (AP)	6	
		1095-6-8-3	. . . Spacer (MFD by 14497) (AP)	6	
-24		1704-466Y	. . . Cap (MFD by 97045)	1	
-25		402466	. . HOUSING ASSY, Oxidizer valve	REF	
-26		RX20615-11	. . . Closure Assy, LOX pump discharge	2	
		NAS1010-3H	. . . Bolt (AP)	6	
		LD153-0013-0008	. . . Washer (AP)	6	

FIG & INDEX NO	ZONE NO	PART NUMBER	DESCRIPTION 1 2 3 4 5 6 7	UNITS PER ASSY	USABLE ON CODE
46-27		ST3950025RKL001	. . . Plate Assy	1	
		NAS1009-11H	. . . Bolt (AP)	6	
		1095-10-1BB	. . . Bushing (MFD by 14497) (AP)	6	
-38		RX20888-21	. . . Plate Assy	1	
		AN501AD516-8	. . . Screw (AP)	2	
		LD153-0010-0012	. . . Washer (AP)	2	
-29		554119	. . VALVE ASSY, Check, oxidizer dome purge	REF	
-29		554102	. . BODY ASSY, Swing check purge, valve	REF	
-30		RK305-10042-011	. . . Closure Assy, Molded	1	
		NAS501-4-7	. . . Bolt (AP)	2	
		LD153-0010-0010	. . . Washer (AP)	4	
		AN310C4R	. . . Nut (AP)	2	
-31		RX20860-57	. . . Plate Assy	1	
		AN501AD416-10	. . . Screw (AP)	2	
		LD153-0010-0010	. . . Washer (AP)	2	

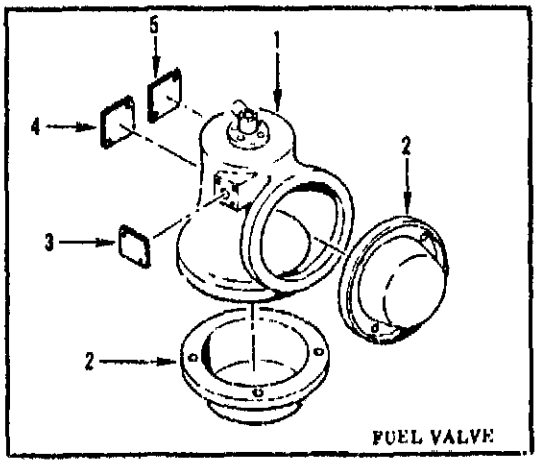

FUEL VALVE

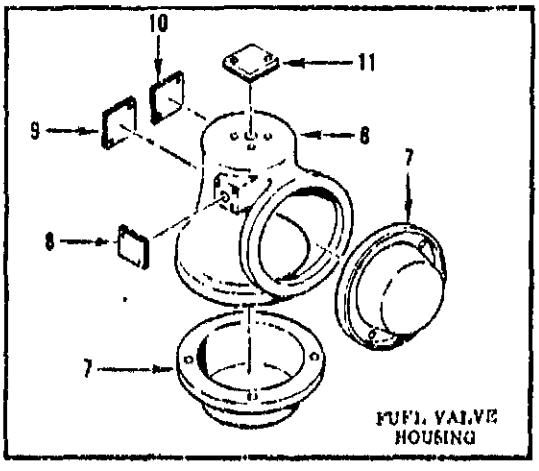

FUEL VALVE HOUSING

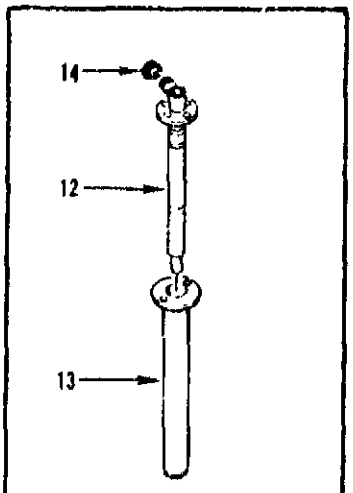

FUEL VALVE VARIABLE INDICATOR

FI-4-78A

Figure 47. Fuel Valve Closures

FIG & INDEX NO	ZONE NO	PART NUMBER	DESCRIPTION 1 2 3 4 5 6 7	UNITS PER ASSY	USABLE ON CODE
47-		EK305-00024	FUEL VALVE CLOSURES (See figure 1 for RQMT)	REF	
		RX50070	. PROTECTIVE CLOSURE INSTL, Fuel valve	1	
- 1		410910-11	. . VALVE ASSY, Fuel	REF	
- 2		RX20640-11	. . . Cover Assy, Fuel discharge	2	
		NAS501-10H10A	. . . Bolt (AP)	5	
		LD153-0010-0022	. . . Washer (AP)	5	
- 3		RX20660-33	. . . Plate Assy	1	
		NAS501-4H5A	. . . Bolt (AP)	2	
		LD153-0010-0010	. . . Washer (AP)	2	
- 4		RX20660-57	. . . Plate Assy	1	
- 5		RX20660-65	. . . Plate Assy	1	
		NAS501-4H5A	. . . Bolt (AP)	2	
		LD153-0010-0010	. . . Washer (AP)	2	
- 6		410909	. . HOUSING ASSY, Main fuel valve	REF	
- 7		RX20640-11	. . . Cover Assy, Fuel discharge	1	
		NAS501-10H10A	. . . Bolt (AP)	10	
		LD153-0010-0022	. . . Washer (AP)	10	
- 8		RX20660-33	. . . Plate Assy	1	
		NAS501-4H5A	. . . Bolt (AP)	2	
		LD153-0010-0010	. . . Washer (AP)	2	

FIG & INDEX NO	ZONE NO	PART NUMBER	DESCRIPTION 1 2 3 4 5 6 7	UNITS PER ASSY	USABLE ON CODE
47- 9		RX20660-57	. . . Plate Assy	1	
-10		RX20660-65	. . . Plate Assy	1	
		NAS501-4H5A	. . . Bolt (AP)	2	
		LD153-0010-0010	. . . Washer (AP)	2	
-11		RX20730	. . . Cover Assy, 4-way control valve	1	
		NAS501-4H5A	. . . Bolt (AP)	2	
		LD153-0010-0010	. . . Washer (AP)	2	
-12		408083-11	. . INDICATOR ASSY, Main fuel valve	REF	
-13		RK395-10006	. . . Closure Assy, Tubular	1	
		MS35266-66	. . . Screw (AP)	2	
		LD153-0010-0008	. . . Washer (AP)	2	
		AN121528	. . . Nut (AP)	2	
-14		RD265-6002-3005	. . . Cap	1	

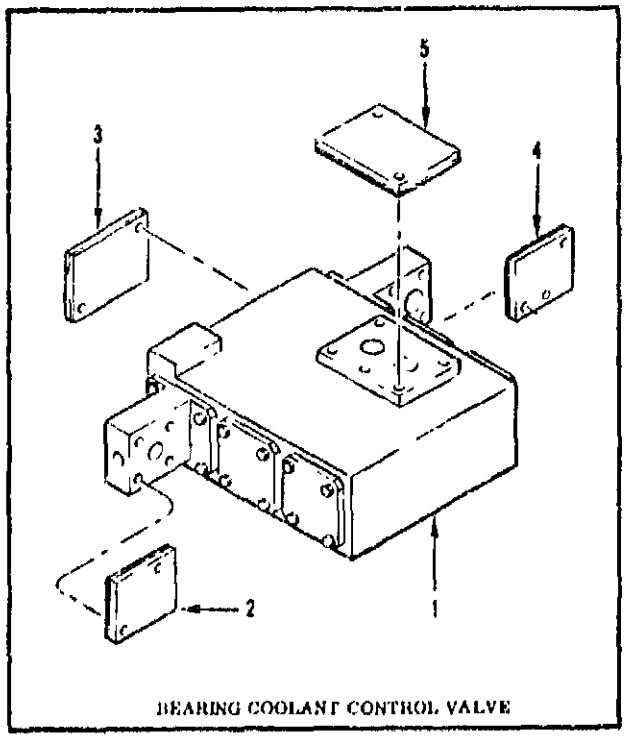

BEARING COOLANT CONTROL VALVE

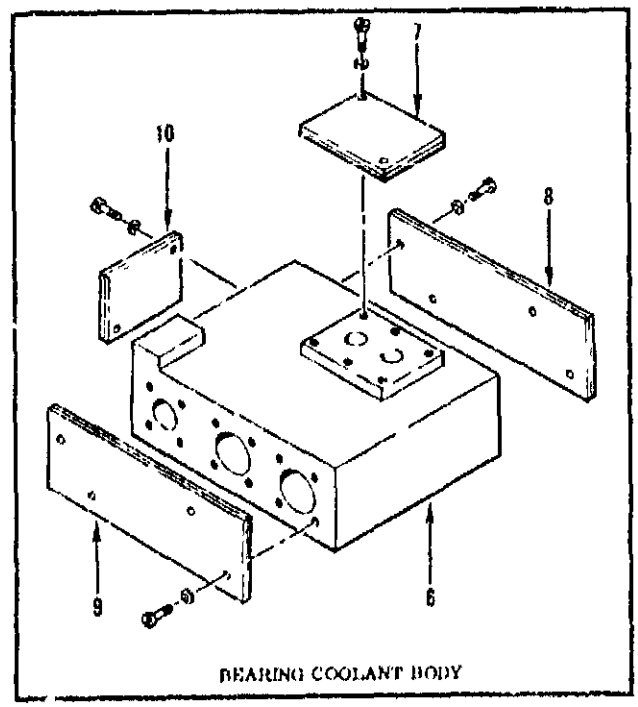

BEARING COOLANT BODY

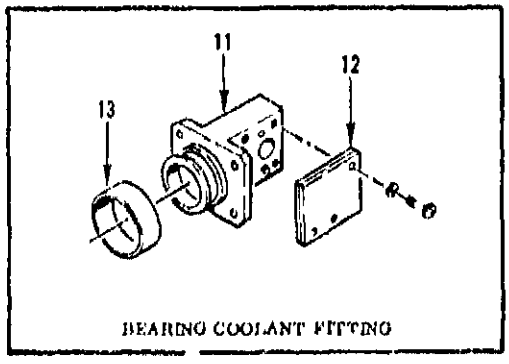

BEARING COOLANT FITTING

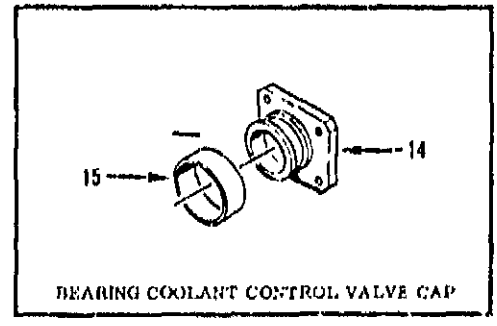

BEARING COOLANT CONTROL VALVE CAP

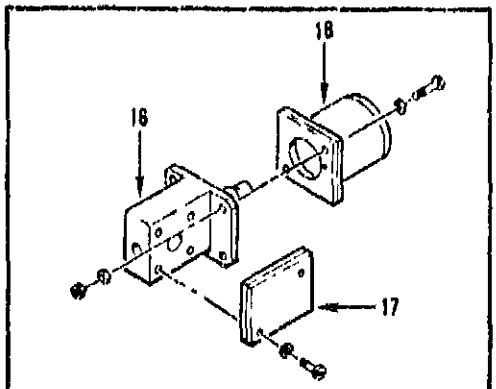

BEARING COOLANT
CONTROL VALVE RETAINER

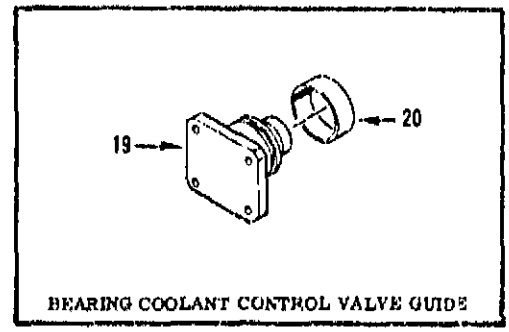

BEARING COOLANT CONTROL VALVE GUIDE

F1-4-80

Figure 48. Coolant Valve Closures

FIG & INDEX NO	ZONE NO	PART NUMBER	1 2 3 4 5 6 7 DESCRIPTION	UNITS PER ASSY.	USABLE ON CODE
48-		RK395-00024	COOLANT VALVE CLOSURES (See figure 1 for REQMT)	REF	
- 1		RK395-00046	. PROTECTIVE CLOSURE INSTL, Valve assembly, coolant	1	
- 1		558075	. . VALVE ASSY, Bearing coolant control	REF	
- 1		558075-11	. . VALVE ASSY, Bearing coolant control	REF	
- 2		RX20660-33	. . . Plate Assy	1	
		MS35276-280	. . . Screw (AP)	2	
		LD153-0010-0010	. . . Washer (AP)	2	
- 3		RX20660-57	. . . Plate Assy	1	
		MS35276-280	. . . Screw (AP)	2	
		LD153-0010-0010	. . . Washer (AP)	2	
- 4		RK395-10009	. . . Closure Assy, Rectangular	1	
		MS35276-280	. . . Screw (AP)	2	
		LD153-0010-0010	. . . Washer (AP)	2	
- 5		RK395-10011	. . . Closure Assy, Rectangular	1	
		MS35276-264	. . . Screw (AP)	2	
		LD153-0010-0008	. . . Washer (AP)	2	
- 6		556017	. . BODY ASSY, Bearing coolant control valve	REF	
- 7		RK395-10011	. . . Closure Assy, Rectangular	1	
		MS35276-264	. . . Screw (AP)	2	
		LD151-0010-0008	. . . Washer (AP)	2	
- 8		RK395-10014	. . . Cover Assy, Rectangular	1	
		MS35276-280	. . . Screw (AP)	4	
		LD153-0010-0010	. . . Washer (AP)	4	
- 9		RK395-10014 011	. . . Cover Assy, Rectangular	1	
		MS35276-264	. . . Screw (AP)	4	
		LD153-0010-0008	. . . Washer (AP)	4	
-10		RX21060-57	. . . Plate Assy	1	
		MS35276-280	. . . Screw (AP)	2	
		LD163-0010-0010	. . . Washer (AP)	2	
-11		556022	. . FITTING ASSY, Bearing coolant control valve	REF	
-12		RK395-10009	. . . Closure Assy, Rectangular	1	
		MS35276-280	. . . Screw (AP)	2	
		LD153-0010-0010	. . . Washer (AP)	2	
-13		RK395-50041	. . . Band, Groove protector	1	
-14		556018	. . CAP, Bearing coolant control valve	REF	
-15		RK395-50041	. . . Band, Groove protector	1	
-16		556019	. . RETAINER ASSY, Bearing coolant control valve	REF	
-17		RX20660-33	. . . Plate Assy	1	
		MS35276-280	. . . Screw (AP)	2	
		LD153-0010-0010	. . . Washer (AP)	2	
-18		RK395-10010	. . . Closure Assy, Square, tubular	1	
		AN525D10-14	. . . Screw (AP)	2	
		LD153-0011-0012	. . . Washer (AP)	4	
		AN315D3R	. . . Nut (AP)	2	
-19		555157	. . GUIDE, Bearing coolant control valve	REF	
-20		RK395-50041-005	. . . Band, Groove protector	1	

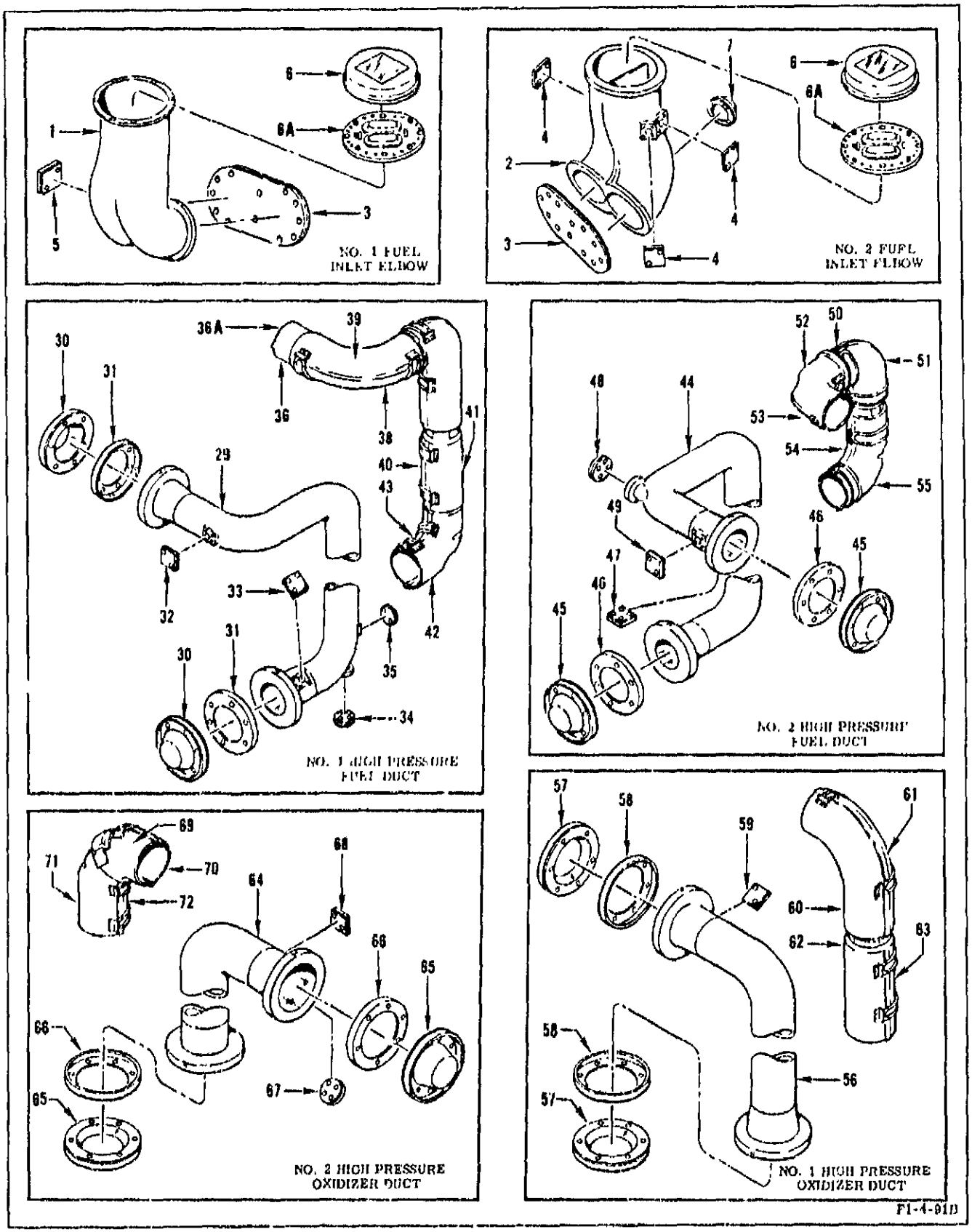

Figure 49. Propellant Feed Duct and Elbow Closures

FIG & INDEX NO	ZONE NO	PART NUMBER	DESCRIPTION 1 2 3 4 5 6 7	UNITS PER ASSY		USABLE ON CODE
49-		RK395-00024	PROPELLANT FEED DUCT AND ELBOW CLOSURES (See figure 1 for REQMT)	REF	REF	
		RK395-00028	. PROTECTIVE CLOSURE INSTL, Propellant feed system (Propellant feed duct and elbow closures)	1		
		RK395-00048	. PROTECTIVE CLOSURE INSTL, Propellant feed system (Propellant feed duct closures)		1	
			PARTIAL BREAKDOWN FOLLOWS			
- 1		404913	. . ELBOW ASSY, Fuel inlet, NO. 1	REF		
- 2		404912	. . ELBOW ASSY, Fuel inlet, NO. 2	REF		
- 2		404920	. . ELBOW ASSY, Fuel inlet, NO. 2	REF		
		404920-11	. . ELBOW ASSY, Fuel inlet, NO. 2	REF		
- 3		RK395-44016	. . . Plate Assy, Fuel inlet	1		
		NAS501-7H5A	. . . Bolt (AP)	5		
		NAS501-7-20	. . . Bolt (AP)	7		
		LD153-0010-0016	. . . Washer (AP)	19		
		AN316C7R	. . . Nut (AP)	7		
- 4		RX20660-33	. . . Plate Assy (NHA 404912)	1		
		MS35276-280	. . . Screw (AP)	2		
		LD153-0010-0010	. . . Washer (AP)	2		
- 4		RX20660-33	. . . Plate Assy (NHA 404920 and 404920-11)	3		
		MS35276-280	. . . Screw (AP)	2		
		LD153-0010-0010	. . . Washer (AP)	2		
- 5		RX20660-33	. . . Plate Assy (NHA 404913)	1		
		MS35276-280	. . . Screw (AP)	2		
		LD153-0010-0010	. . . Washer (AP)	2		
- 6		ST3950180RKL021	. . . Cover Assy, Protective inlet closure, fuel	2		
- 6A		ST3950153RKL001	. . . Closure Assy, Fuel inlet (Replaces RK395-44302 or RK395-44002-011 for spares)	2		
- 7		RX20607	. . . Closure Assy, Preservation and packaging	1		
		MS35276-285	. . . Screw (AP)	4		
		LD153-0010-0012	. . . Washer (AP)	4		
- 8 THRU -28		DELETED				
-29		408804	. . DUCT ASSY, Fuel, NO. 1 high pressure		REF	
-29		409270	. . DUCT ASSY, Fuel, NO. 1 high pressure		REF	
-29		409270-11	. . DUCT ASSY, Fuel, NO. 1 high pressure		REF	
-30		RX20640-11	. . . Closure Assy, Fuel discharge		2	
-31		RX20697-17	. . . Ring, Flange protector, extruded		2	
		AN501-10-20	. . . Bolt (AP)		5	
		LD153-0014-0026	. . . Washer (AP)		10	
		AN316-10R	. . . Nut (AP)		5	
-32		RK395-10072	. . . Plate Assy (NHA 408804)		1	
		AN501A416-8	. . . Screw (AP)		2	
		LD153-0014-0014	. . . Washer (AP)		2	
-33		RX20673-41	. . . Plate Assy		1	
		AN501A416-8	. . . Screw (AP)		4	
		LD153-0014-0014	. . . Washer (AP)		4	
-34		RX20868-171	. . . Plate Assy		1	
		AN501A416-8	. . . Screw (AP)		4	
		LD153-0014-0014	. . . Washer (AP)		4	
-35		RK395-10031	. . . Plate Assy, Round		1	
		AN501A416-8	. . . Screw (AP)		2	
		LD153-0014-0014	. . . Washer (AP)		2	
-36		ST3950014RKL001	. . . Cover Assy, Protective, NO. 1 fuel duct, flight instrumentation (LH)		1	
-36A		ST3950014RKL002	. . . Cover Assy, Protective, NO. 1 fuel duct, flight instrumentation (RH)		1	
-37		DELETED				
-38		ST3950013RKL001	. . . Cover Assy, Protective, NO. 1 fuel duct, pump end (LH)		1	
-39		ST3950013RKL002	. . . Cover Assy, Protective, NO. 1 fuel duct, pump end (RH)		1	
-40		ST3950012RKL001	. . . Cover Assy, Protective, NO. 1 fuel duct (LH)		1	
-41		ST3950012RKL002	. . . Cover Assy, Protective, NO. 1 fuel duct (RH)		1	
-42		ST3950011RKL001	. . . Cover Assy, Protective, NO. 1 fuel duct (LH)		1	
-43		ST3950011RKL002	. . . Cover Assy, Protective, NO. 1 fuel duct (RH)		1	
-44		408818	. . DUCT ASSY, Fuel NO. 2 high pressure (NO. 2 fuel high-pressure duct)		REF	
-45		RX20640-11	. . . Closure Assy, fuel discharge		2	
-46		RX20697-17	. . . Ring, Flange protector, extruded		2	
		AN10-26	. . . Bolt (AP)		5	
		LD153-0014-0026	. . . Washer (AP)		10	
		AN316-10R	. . . Nut (AP)		5	
-47		RX20673-41	. . . Plate Assy		1	
		AN501A416-8	. . . Screw (AP)		4	
		LD153-0014-0014	. . . Washer (AP)		4	
-48		RX20610-221	. . . Plate Assy		1	
		AN501A416-8	. . . Screw (AP)		4	
		LD153-0014-0018	. . . Washer (AP)		4	

FIG & INDEX NO	ZONE NO	PART NUMBER	DESCRIPTION 1 2 3 4 5 6 7	UNITS PER ASSY	USABLE ON CODE
49-49		RX20660-33	. . . Plate Assy	1	
		AN501A416-8	. . . Screw (AP)	2	
		LD153-0014-0014	. . . Washer (AP)	2	
49A		RK365 10031	. . . Plate Assy, Round	1	
		AN501A416-8	. . . Screw (AP)	2	
		LD153-0014-0014	. . . Washer (AP)	2	
-50		ST3950022RKL001	. . . Cover Assy, Protective, NO. 2 fuel duct (LH)	1	
-51		ST3950022RKL002	. . . Cover Assy, Protective, NO. 2 fuel duct (RH)	1	
52		ST3950021RKL001	. . . Cover Assy, Protective, NO. 2 fuel duct, pump end (LH)	1	
-53		ST3950021RKL002	. . . Cover Assy, Protective, NO. 2 fuel duct, pump end (RH)	1	
-54		ST3950023RKL001	. . . Cover Assy, Protective, NO. 2 fuel duct (LH)	1	
-55		ST3950023RKL002	. . . Cover Assy, Protective, NO. 2 fuel duct (RH)	1	
-56		408802	. . DUCT ASSY, Oxidizer, high pressure NO. 1	REF	
-56		409272	. . DUCT ASSY, Oxidizer, high pressure NO. 1	REF	
56		409272 11	. . DUCT ASSY, Oxidizer, high pressure NO. 1	REF	
-57		RX [illegible]815-11	. . . Closure Assy, LOX pump discharge	2	
-58		RX20697-12	. . . Ring, Flange protector, extruded	2	
		AN10-26	. . . Bolt (AP)	6	
		LD153-0014-0028	. . . Washer (AP)	12	
		AN316-10R	. . . Nut (AP)	6	
-59		RX20660-33	. . . Plate Assy (NHA 408802)	1	
		AN501A416-8	. . . Screw (AP)	2	
		LD153-0014-0014	. . . Washer (AP)	2	
-60		ST3950010RKL021	. . . Cover Assy, Protective, NO. 1 oxidizer duct (LH)	1	
-61		ST3950010RKL022	. . . Cover Assy, Protective, NO. 1 oxidizer duct (RH)	1	
-62		ST3950010RKL011	. . . Cover Assy, Protective, NO. 1 oxidizer duct (LH)	1	
-63		ST3950010RKL012	. . . Cover Assy, Protective, NO. 1 oxidizer duct (LH)	1	
-64		409516	. . DUCT ASSY, Oxidizer, high pressure, NO 2	REF	
-65		RX20615 11	. . . Closure Assy, LOX pump discharge	2	
66		RX20697-19	. . . Ring, Flange protector, extruded	1	
		AN10-26	. . . Bolt (AP)	6	
		LD153-0014-0028	. . . Washer (AP)	12	
		AN316-10R	. . . Nut (AP)	6	
-67		RX20610-211	. . . Plate Assy	1	
		AN501AD516-10	. . . Screw (AP)	4	
		LD153-0014-0016	. . . Washer (AP)	4	
		AN316-4R	. . . Nut (AP)	4	
-68		RX20660-33	. . . Plate Assy	1	
		AN501A416-8	. . . Screw (AP)	2	
		LD153-0014-0014	. . . Washer (AP)	2	
-69		ST3950020RKL011	. . . Cover Assy, Protective, NO. 2 oxidizer duct (LH)	1	
-70		ST3950020RKL012	. . . Cover Assy, Protective, NO. 2 oxidizer duct (RH)	1	
-71		ST3950020RKL021	. . . Cover Assy, Protective, NO. 2 oxidizer duct (LH)	1	
-72		ST3950020RKL022	. . . Cover Assy, Protective, NO. 2 oxidizer duct (RH)	1	

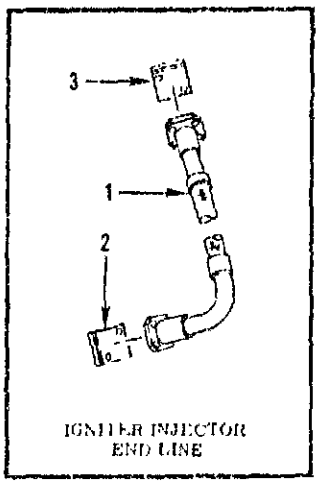

IGNITER INJECTOR END LINE

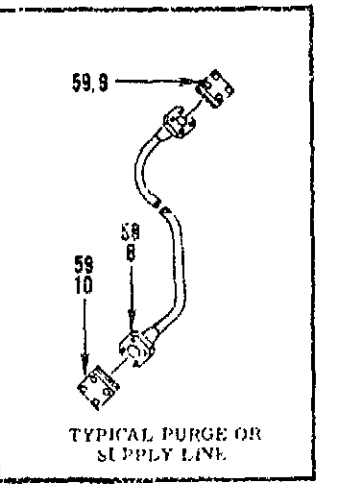

TYPICAL PURGE OR SUPPLY LINE

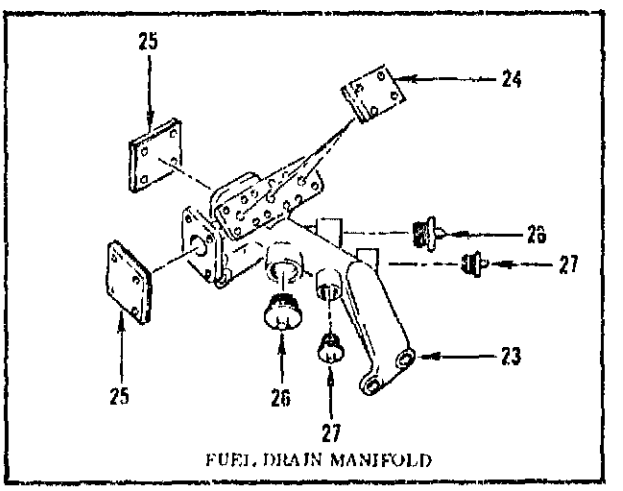

FUEL DRAIN MANIFOLD

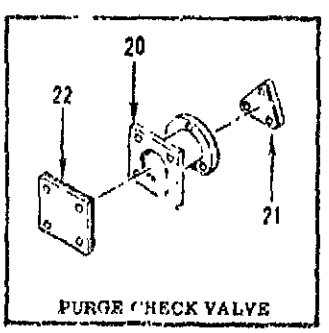

PURGE CHECK VALVE

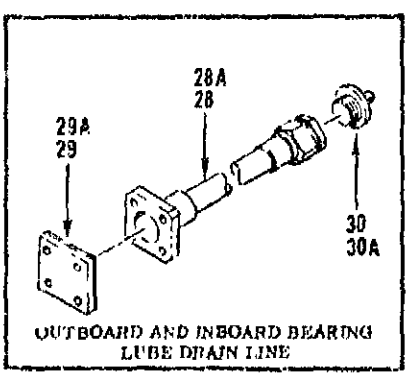

OUTBOARD AND INBOARD BEARING LUBE DRAIN LINE

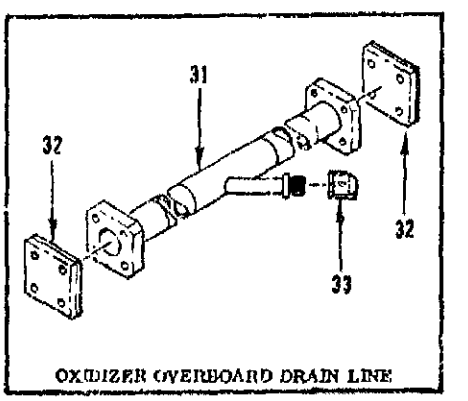

OXIDIZER OVERBOARD DRAIN LINE

F1-4-82C

Figure 50. Propellant Feed Line and Manifold Closures (Sheet 1 of 2)

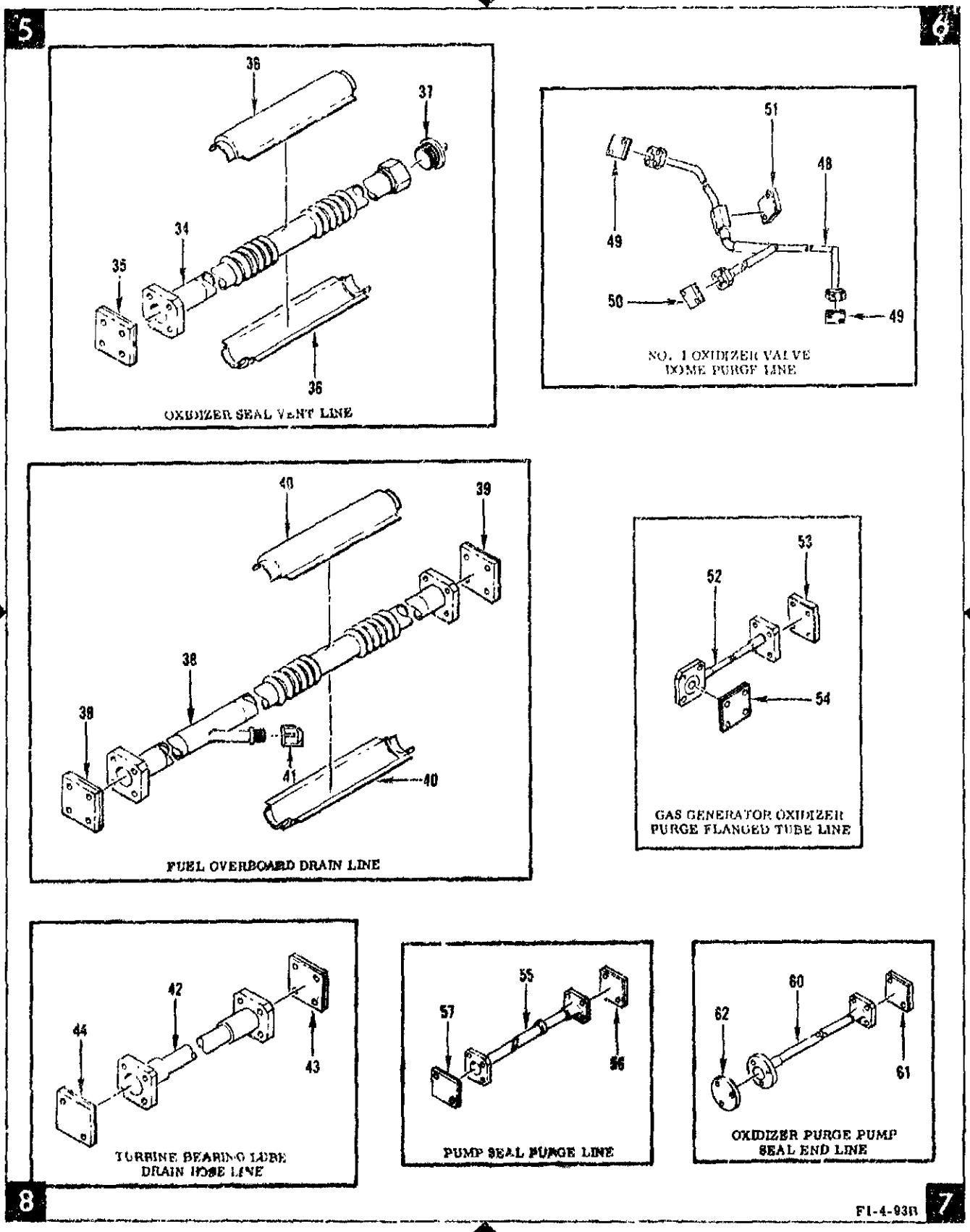

Figure 50. Propellant Feed Line and Manifold Closures (Sheet 2 of 2)

FIG & INDEX NO	ZONE NO	PART NUMBER	DESCRIPTION 1 2 3 4 5 6 7	UNITS PER ASSY		USABLE ON CODE
50-		RK395-00024	PROPELLANT FEED LINE AND MANIFOLD CLOSURES (See figure 1 for REQMT)	REF	REF	
		RK395-00028	. PROTECTIVE CLOSURE INSTL, Propellant feed system (Propellant feed line and manifold closures)	1		
		RK395-00048	. PROTECTIVE CLOSURE INSTL, Propellant feed system (Propellant feed line closures)		1	
			PARTIAL BREAKDOWN FOLLOWS			
- 1	1	407877	. . LINE ASSY, Igniter injector end (Hypergol manifold outlet hose)	REF		
- 1	1	NA5-260163	. . HOSE ASSY, Hypergol manifold to thrust chamber injector (Hypergol manifold outlet hose)	REF		
- 2	1	RX20660-45 (a)	. . . Plate Assy	1		
		NAS501-4-10	. . . Bolt (AP)	2		
		LD153-0010-0010	. . . Washer (AP)	4		
		AN316C4R	. . . Nut (AP)	2		
- 3	1	RX20660-45 (a)	. . . Plate Assy	1		
		NAS501-4-12	. . . Bolt (AP)	2		
		LD153-0010-0010	. . . Washer (AP)	4		
		AN316C4R	. . . Nut (AP)	2		
- 4 THRU - 7		DELETED				
- 8	2	407011	. . LINE ASSY, Dome purge, NO. 2 main oxidizer valve	REF		
- 9	2	RX20660-57 (a)	. . . Plate Assy	1		
		NAS501-4-10	. . . Bolt (AP)	2		
		LD153-0010-0010	. . . Washer (AP)	4		
		AN316C4R	. . . Nut (AP)	2		
-10	2	RX20660-57 (a)	. . . Plate Assy	1		
		NAS501-4-12	. . . Bolt (AP)	2		
		LD153-0010-0010	. . . Washer (AP)	4		
		AN316C4R	. . . Nut (AP)	2		
-11 THRU -19		DELETED				
-20	4	308915	. . VALVE ASSY, Check, purge (Gas generator oxidizer purge check valve)	REF		
-21	4	RX20123 (a)	. . . Cover Assy, Preservation and packaging, vernier poppet valve	1		
		NAS501-4-7	. . . Bolt (AP)	3		
		LD153-0010-0010	. . . Washer (AP)	6		
		AN316C4R	. . . Nut (AP)	3		
-22	4	RX20673-41 (a)	. . . Plate Assy	1		
		NAS501-4-10	. . . Bolt (AP)	4		
		LD153-0010-0010	. . . Washer (AP)	8		
		AN316C4R	. . . Nut (AP)	4		
-23	3	407474	. . MANIFOLD, Fuel drain	REF		
-24	2	RX20660-65	. . . Plate Assy	3		
		MS35276-280	. . . Screw (AP)	4		
		LD153-0010-0010	. . . Washer (AP)	4		
-25	1, 4	RK395-10004-021	. . . Plate Assy	2		
		MS35276-280	. . . Screw (AP)	4		
		LD153-0010-0010	. . . Washer (AP)	4		
-26	3, 4	RD265-2001-0006	. . . Plug	2		
-27	3	RD265-2001-0003	. . . Plug	2		
-28	4	410087	. . TUBE ASSY, Drain, bearing lubrication, outboard	REF		
-28A	4	408236	. . LINE ASSY, Bearing lube drain, inboard	REF		
-29	4	RX20660-35 (a)	. . . Plate Assy	1		
-29A	4	RX20660-55 (a)	. . . Plate Assy	1		
		NAS501-4-12	. . . Bolt (AP)	4		
		LD153-0010-0010	. . . Washer (AP)	8		
		AN316C4R	. . . Nut (AP)	4		
-30	3	RD265-2001-0005 (a)	. . . Plug	1		
-30A	3	RD265-2001-0005 (a)	. . . Plug	1		
-31	3	408245	. . LINE ASSY, Oxidizer, overboard drain	REF		
-32	3	RX20636 (a)	. . . Plate Assy, LOX bleed line	2		
		NAS501-4-11	. . . Bolt (AP)	4		
		LD153-0010-0010	. . . Washer (AP)	8		
		AN316C4R	. . . Nut (AP)	4		
-33	3	RD265-5016-0008	. . . Cap	1		
-34	5	410092	. . TUBE ASSY, Dual vent, oxidizer	REF		
-35	5	RX20636 (a)	. . . Plate Assy, LOX bleed line	1		
		NAS501-4-10	. . . Bolt (AP)	4		
		LD153-0010-0010	. . . Washer (AP)	8		
		AN316C4R	. . . Nut (AP)	4		

(a) See figure 61 for Alternate Closure Installation on line flanges 6 inches or less.

FIG & INDEX NO	ZONE NO	PART NUMBER	1 2 3 4 5 6 7 DESCRIPTION	UNITS PER ASSY	USABLE ON CODE
50-36	5	RK395-10026-011	. . . Cover Assy, Bellows	2	
-37	5	RD265-2001-0020	. . . Plug	1	
-38	8	408243	. . LINE ASSY, Overboard drain, fuel	REF	
-39	5, 8	RK395-10004-021 (a)	. . . Plate Assy	2	
		NAS501-4-12	. . . Bolt (AP)	4	
		LD153-0010-0010	. . . Washer (AP)	8	
		AN316C4R	. . . Nut (AP)	4	
-40	5, 8	RK395-10026	. . . Cover Assy, Bellows	2	
-41	8	RD265-5010-0016	. . . Cap	1	
-42	8	408848	. . HOSE ASSY, Drain bearing lube	REF	
-43	8	RX20660-65 (a)	. . . Plate Assy	1	
		NAS501-4-12	. . . Bolt (AP)	4	
		LD153-0010-0010	. . . Washer (AP)	8	
		AN316C4R	. . . Nut (AP)	4	
-44	8	RX20660-33 (a)	. . . Plate Assy	1	
		NAS501-4-12	. . . Bolt (AP)	2	
		LD153-0010-0010	. . . Washer (AP)	4	
		AN316C4R	. . . Nut (AP)	2	
-45 THRU -47		DELETED			
-48	6	410079	. . TUBE ASSY, Dome purge, NO. 1 main oxidizer valve		REF
-49	6	RX20660-57 (a)	. . . Plate Assy		2
		NAS501-4-11	. . . Bolt (AP)		2
		LD153-0010-0010	. . . Washer (AP)		4
		AN316C4R	. . . Nut (AP)		2
-50	6	RX20660-45 (a)	. . . Plate Assy		1
		NAS501-4-10	. . . Bolt (AP)		2
		LD153-0010-0010	. . . Washer (AP)		4
		AN316C4R	. . . Nut (AP)		2
-51	6	RX20660-57	. . . Plate Assy		1
		MS9575-08	. . . Bolt (AP)		2
		LD153-0010-0010	. . . Washer (AP)		2
-52	7	410098	. . TUBE ASSY, Flanged, oxidizer purge, gas generator		REF
-53	7	RX20660-57 (a)	. . . Plate Assy		1
		NAS501-4-11	. . . Bolt (AP)		2
		LD153-0010-0010	. . . Washer (AP)		4
		AN316C4R	. . . Nut (AP)		2
-54	7	RX20816 (a)	. . . Plate Assy, LOX connector		1
		NAS501-4-12	. . . Bolt (AP)		4
		LD153-0010-0010	. . . Washer (AP)		8
		AN316C4R	. . . Nut (AP)		4
-55	7	410086	. . LINE ASSY, Purge pump seal (Welded) (Turbopump seal purge line)		REF
-56	7	RX20660-57 (a)	. . . Plate Assy		1
		NAS501-4-10	. . . Bolt (AP)		2
		LD153-0010-0010	. . . Washer (AP)		4
		AN316C4R	. . . Nut (AP)		2
-57	8	RX20660-45 (a)	. . . Plate Assy		1
		NAS501-4-7	. . . Bolt (AP)		2
		LD153-0010-0010	. . . Washer (AP)		4
		AN316C4R	. . . Nut (AP)		2
-58	2	409205	. . TUBE ASSY, Igniter fuel supply		REF
-59	2	RX20673-41 (a)	. . . Plate Assy		2
		NAS501-4-11	. . . Bolt (AP)		4
		LD153-0010-0010	. . . Washer (AP)		8
		AN316C4R	. . . Nut (AP)		1
-60	7	410089	. . TUBE ASSY, Purge oxidizer pump seal, pump end (Welded) (Turbopump oxidizer seal purge tube - pump end)		REF
-61	7	RX20660-57 (a)	. . . Plate Assy		1
		NAS501-4-7	. . . Bolt (AP)		2
		LD153-0010-0010	. . . Washer (AP)		4
		AN316C4R	. . . Nut (AP)		2
-62	7	RK395-10023-051 (a)	. . . Plate Assy, Round		1
		NAS501-4-11	. . . Bolt (AP)		3
		LD153-0010-0010	. . . Washer (AP)		6
		AN316C4R	. . . Nut (AP)		3

(a) See figure 61 for Alternate Closure installation on line flanges 6 inches or less.

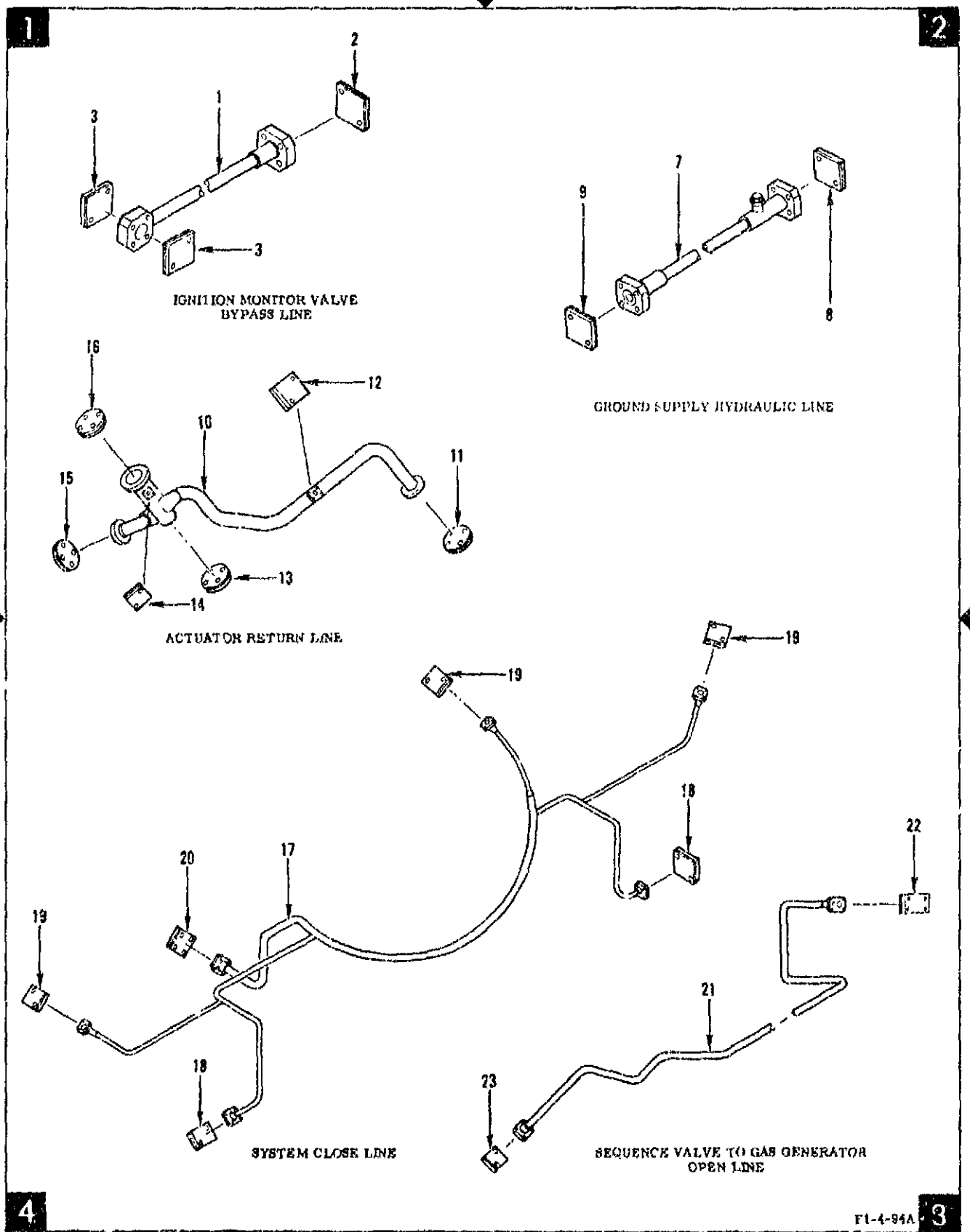

Figure 51. Hydraulic Control Line Closures (Sheet 1 of 3)

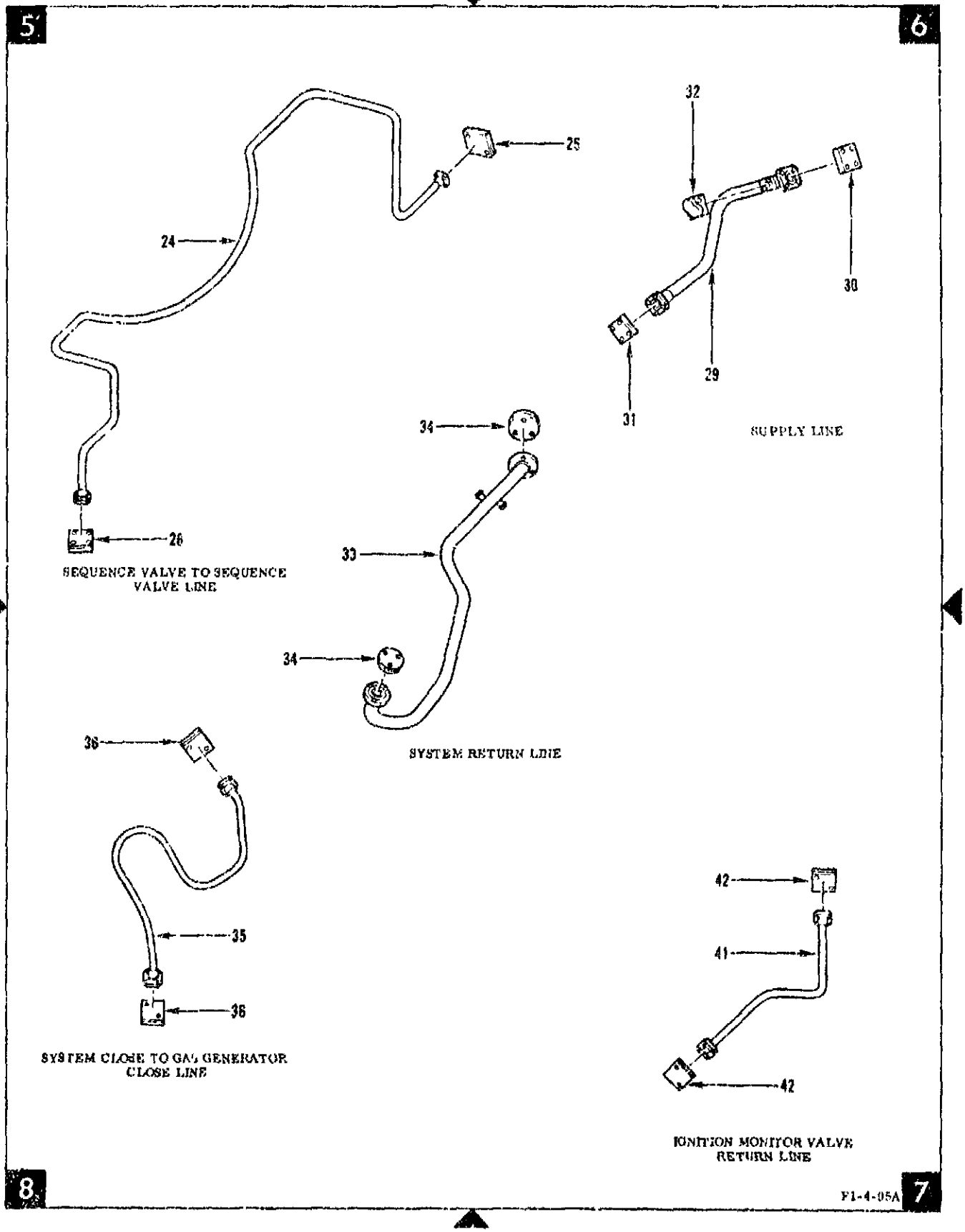

Figure 51. Hydraulic Control Line Closures (Sheet 1 of 3)

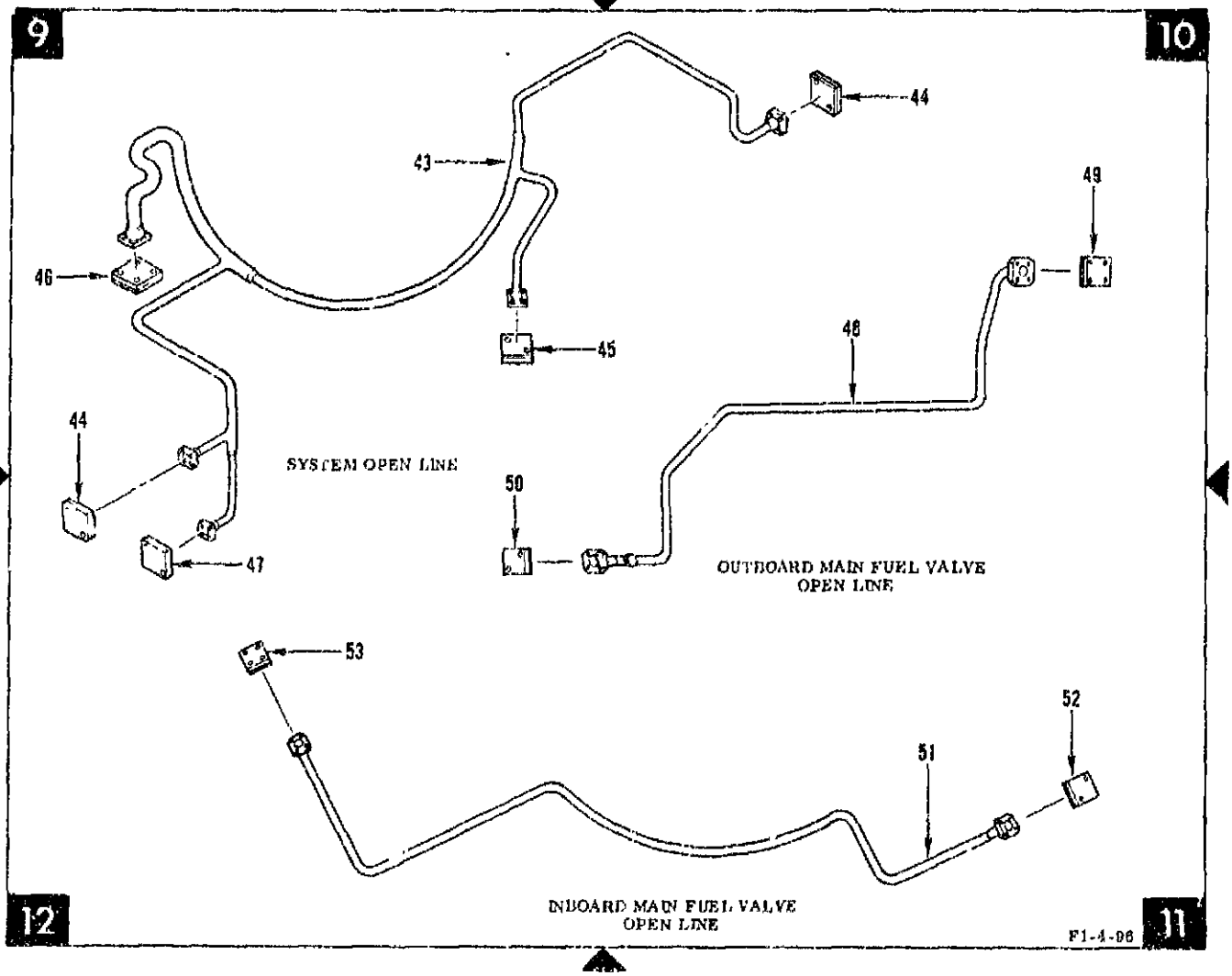

Figure 51. Hydraulic Control Line Closures (Sheet 3 of 3)

FIG & INDEX NO	ZONE NO	PART NUMBER	DESCRIPTION 1 2 3 4 5 6 7	UNITS PER ASSY	USABLE ON CODE
51-		RK395-00024	HYDRAULIC CONTROL LINES CLOSURES (See figure 1 for REQMT)	REF	
		RK395-00030	. PROTECTIVE CLOSURE INSTL, Hydraulic control system (Hydraulic control line closures)	1	
- 1	1	602060	. . TUBE ASSY, Flanged by pass monitor valve ignition monitor valve sense tube)	REF	
- 2	1	RX20660-57 (a)	. . . Plate Assy	1	
		NAS501-4-11	. . . Bolt (AP)	2	
		LD153-0010-0010	. . . Washer (AP)	4	
		AN316C4R	. . . Nut (AP)	2	
- 3	1	RX20660-9 (a)	. . . Plate Assy	2	
		NAS501-4-17	. . . Bolt (AP)	2	
		LD153-0010-0010	. . . Washer (AP)	4	
		AN316C4R	. . . Nut (AP)	2	
- 4 THRU - 6		DELETED			
- 7	2	602087	. . LINE ASSY, Ground supply hydraulic (Engine control valve ground hydraulic supply hose)	REF	
- 8	2	RK395-44001-011 (a)	. . . Plate Assy, Rectangular	1	
		NAS501-4-12	. . . Bolt	2	
		LD153-0010-0010	. . . Washer (AP)	4	
		AN316C4R	. . . Nut (AP)	2	

(a) See figure 61 for Alternate Closure Installation on line flanges 6 inches or less.

FIG & INDEX NO.	ZONE NO	PART NUMBER	DESCRIPTION 1 2 3 4 5 6 7	UNITS PER ASSY	USABLE ON CODE
51- 9	2	RX20660-67 (a)	. . . Plate Assy	1	
		NAS501-4-11	. . . Bolt (AP)	4	
		LD153-0010-0010	. . . Washer (AP)	8	
		AN316C4R	. . . Nut (AP)	4	
-10	1	601909	. . LINE ASSY, Actuator return	REF	
-10	1	601909-31	. . LINE ASSY, Actuator retu n	REF	
-11	1	RX20610-241 (a)	. . . Plate Assy	1	
		NAS501-5-13	. . . Bolt (AP)	4	
		LD153-0010-0012	. . . Washer (AP)	8	
		AN316C5R	. . . Nut (AP)	4	
-12	1	RX20660-27 (a)	. . . Plate Assy	1	
		NAS501-4-10	. . . Bolt (AP)	2	
		LD153-0010-0010	. . . Washer (AP)	4	
		AN316C4R	. . . Nut (AP)	2	
-13	1	RX20645 (a)	. . . Plate Assy, Preservation and packaging, combustor	1	
		NAS501-4-11	. . . Bolt (AP)	3	
		LD153-0010-0010	. . . Washer (AP)	6	
		AN316C4R	. . . Nut (AP)	3	
-14	1	RX20660-33 (a)	. . . Plate Assy	1	
		RD111-6001-0401	. . . Screw (AP)	2	
-15	1	RX20610-241 (a)	. . . Plate Assy	1	
		NAS501-5-13	. . . Bolt (AP)	4	
		LD153-0010-0012	. . . Washer (AP)	8	
		AN316C5R	. . . Nut (AP)	4	
-16	1	RX20610-301 (a)	. . . Plate Assy	1	
		NAS501-4-11	. . . Bolt (AP)	4	
		LD153-0010-0010	. . . Washer (AP)	8	
		AN316C4R	. . . Nut	4	
-17	4	602089	. . TUBE ASSY, System close (Propellant valves close tube)	REF	
-18	3,4	RX20660-45 (a)	. . . Plate Assy	2	
		NAS501-4-11	. . . Bolt (AP)	2	
		LD153-0010-0010	. . . Washer (AP)	4	
		AN316C4R	. . . Nut (AP)	2	
-19	3,4	RX20660-57 (a)	. . . Plate Assy	3	
		NAS501-4-11	. . . Bolt (AP)	2	
		LD153-0010-0010	. . . Washer (AP)	4	
		AN316C4R	. . . Nut (AP)	2	
-20	4	RX20673-41 (a)	. . . Plate Assy	1	
		NAS501-4-11	. . . Bolt (AP)	4	
		LD153-0010-0010	. . . Washer (AP)	8	
		AN316C4R	. . . Nut (AP)	4	
-21	3	602102	. . TUBE ASSY, Sequence valve to gas generator, open (Gas generator ball valve open tube)	REF	
-22	3	ST3950124RKL001 (a)	. . . Plate Assy, Ball valve line	1	
-23	3	RX20660-65 (a)	. . . Plate Assy	1	
		NAS501-4-11	. . . Bolt (AP)	4	
		LD153-0010-0010	. . . Washer (AP)	8	
		AN316C4R	. . . Nut (AP)	4	
-24	5	602055	. . LINE ASSY, Sequence valve to sequence valve	REF	
-25	6	RX20660-57 (a)	. . . Plate Assy	1	
		NAS501-3-12	. . . Bolt (AP)	2	
		LD153-0010-0008	. . . Washer (AP)	4	
		AN121526	. . . Nut (AP)	2	
-26	5	RX20660-65 (a)	. . . Plate Assy	1	
		NAS501 4-11	. . . Bolt (AP)	4	
		LD153-0010-0010	. . . Washer (AP)	8	
		AN316C4R	. . . Nut (AP)	4	
-27		DELETED			
-28		DELETED			
-29	6	602004	. . TUBE ASSY, Engine supply (Engine control valve supply tube)	REF	
-30	6	RX20660-67 (a)	. . . Plate Assy	1	
-31	6	RX20673-41 (a)	. . . Plate Assy	1	
		NAS501-4-11	. . . Bolt (AP)	4	
		LD153-0010-0010	. . . Washer (AP)	8	
		AN316C4R	. . . Nut (AP)	4	
-32	6	RX20730 (a)	. . . Cover Assy, 4-way control valve	1	
		RD111-6001-0401	. . . Screw (AP)	2	
-33	5	601881	. . LINE ASSY, System return	REF	
-33	5	601881-21	. . LINE ASSY, System return	REF	
-34	5,8	RX20645 (a)	. . . Plate Assy, Preservation and packaging, combustor	2	
		NAS501-4-11	. . . Bolt (AP)	3	
		LD153-0010-0010	. . . Washer (AP)	6	
		AN316C4R	. . . Nut (AP)	3	
-35	8	602057	. . LINE ASSY, System close to gas generator close (Gas generator ball valve close line)	REF	
-36	8	RX20660-57 (a)	. . . Plate Assy	2	
		NAS501-4-11	. . . Bolt (AP)	4	

(a) See figure 61 for Alternate Closure Installation on line flanges 6 inches or less.

FIG & INDEX NO	ZONE NO	PART NUMBER	DESCRIPTION 1 2 3 4 5 6 7	UNITS PER ASSY.	USABLE ON CODE
51-		LD153-0010-0010	. . . Washer (AP)	8	
		AN316C4R	. . . Nut (AP)	4	
-37 THRU -40		DELETED			
-41	7	602051	. . LINE ASSY, Return, ignition monitor valve	REF	
-42	7	RX20660-27 (a)	. . . Plate Assy	2	
		NAS501-4-11	. . . Bolt (AP)	4	
		LD153-0010-0010	. . . Washer (AP)	8	
		AN316C4R	. . . Nut (AP)	4	
-43	9	602073	. . TUBE ASSY, System open (Propellant valves open tube)	REF	
-43	9	602068	. . TUBE ASSY, System open (Propellant valves open tube)	REF	
-44	9, 10	RX20660-9 (a)	. . . Plate Assy	2	
-45	9	RX20660-45 (a)	. . . Plate Assy	1	
		NAS501-4-11	. . . Bolt (AP)	2	
		LD153-0010-0010	. . . Washer (AP)	4	
		AN316C4R	. . . Nut (AP)	2	
-46	9	RX20073-41 (a)	. . . Plate Assy	1	
		NAS501-4-11	. . . Bolt (AP)	4	
		LD153-0010-0010	. . . Washer (AP)	8	
		AN316C4R	. . . Nut (AP)	4	
-47	12	RX20660-57 (a)	. . . Plate Assy	1	
		NAS501-3-12	. . . Bolt (AP)	2	
		LD153-0010-0008	. . . Washer (AP)	4	
		AN121526	. . . Nut (AP)	2	
-48	10	602066	. . TUBE ASSY, NO. 1, main fuel valve open (NO. 1 fuel valve open control tube)	REF	
-48	10	602066-21	. . TUBE ASSY, NO. 1, main fuel valve open (NO. 1 fuel valve open control tube)	REF	
-49	10	RX20660-65 (a)	. . . Plate Assy	1	
-50	12	RX20660-57 (a)	. . . Plate Assy	1	
		NAS501-4-11	. . . Bolt (AP)	2	
		LD153-0010-0010	. . . Washer (AP)	4	
		AN316C4R	. . . Nut (AP)	2	
-51	11	602065	. . TUBE ASSY, NO. 2, main fuel valve open (NO. 2 fuel valve open control tube)	REF	
-52	11	RX20660-57 (a)	. . . Plate Assy	1	
		NAS501-4-11	. . . Bolt (AP)	2	
		LD153-0010-0010	. . . Washer (AP)	4	
		AN316C4R	. . . Nut (AP)	2	
-53	12	RX20660-65 (a)	. . . Plate Assy	1	
		NAS501-4-11	. . . Bolt (AP)	4	
		LD153-0010-0010	. . . Washer (AP)	8	
		AN316C4R	. . . Nut (AP)	4	

(a) See figure 61 for Alternate Closure Installation on line flanges 6 inches or less.

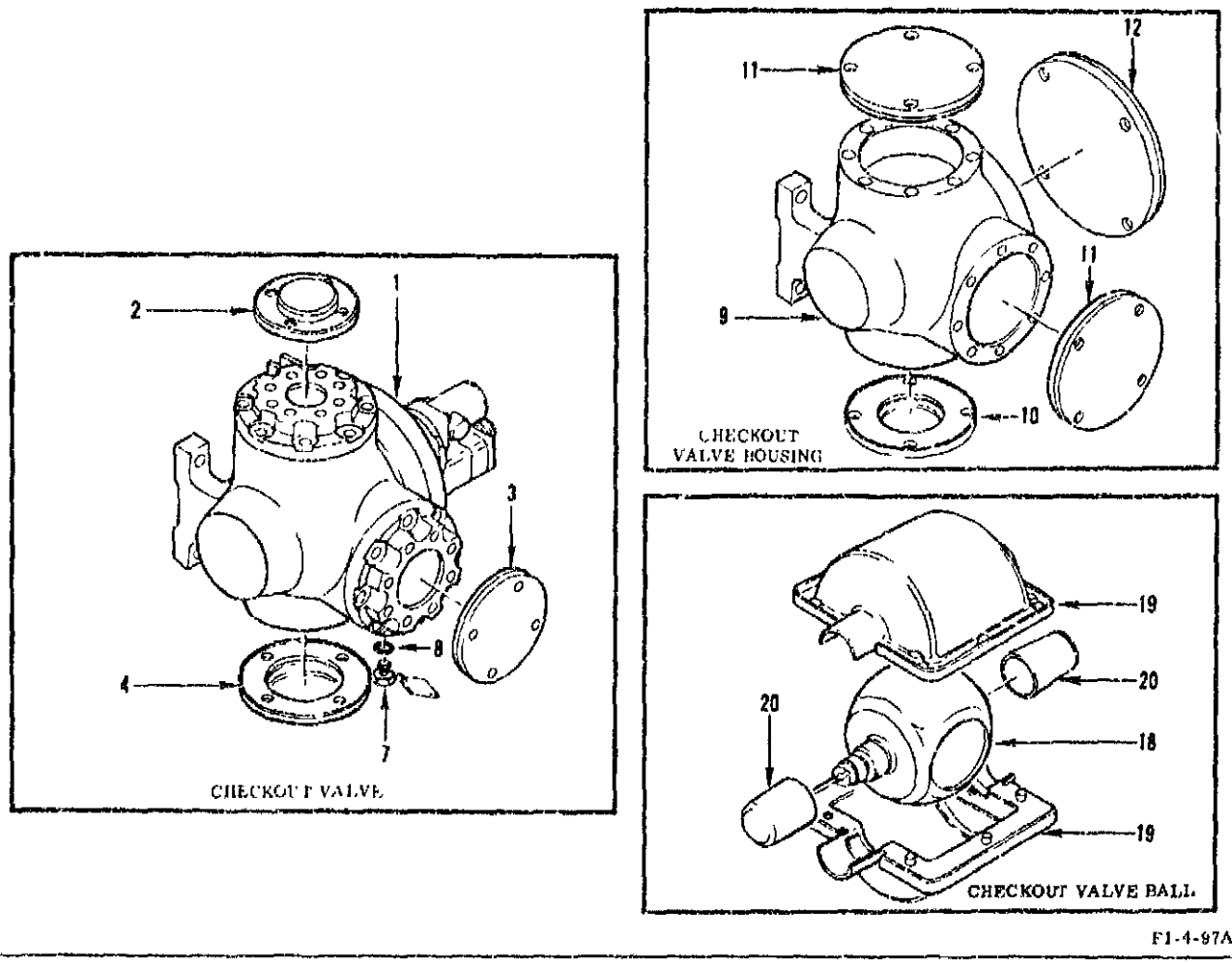

Figure 52. Hydraulic Checkout Valve Closures

FIG & INDEX NO	ZONE NO	PART NUMBER	DESCRIPTION 1 2 3 4 5 6 7	UNITS PER ASSY	USABLE ON CODE
52-		RK395-00024	HYDRAULIC CHECKOUT VALVE CLOSURES (See figure 1 for REQMT)	REF	
		RK395-00044	. PROTECTIVE CLOSURE INSTL, Valve checkout (Hydraulic checkout valve closures)	1	
- 1		308400	. . VALVE ASSY, Checkout	REF	
- 2		RX20607	. . . Closure Assy, Preservation and packaging	1	
		MS35276-294	. . . Screw (AP)	4	
		LD153-0010-0012	. . . Washer (AP)	4	
- 3		RX20610-241	. . . Plate Assy	1	
		MS35276-294	. . . Screw (AP)	5	
		LD153-0010-0010	. . . Washer (AP)	4	
- 4		RX20607	. . . Closure Assy, Preservation and packaging	1	
		MS35276-294	. . . Screw (AP)	4	
		LD153-0010-0012	. . . Washer (AP)	4	
- 5		DELETED			
- 6		DELETED			
- 7		RX20845-21	. . . Closure Assy, LGX valve	1	
- 8		MS29512-01	. . . Packing	1	
- 9		308799	. . HOUSING ASSY, Checkout valve	REF	
-10		RX20607	. . . Closure Assy, Preservation and packaging	1	
		MS35276-295	. . . Screw (AP)	4	
		LD153-0010-0012	. . . Washer (AP)	4	

FIG & INDEX NO	ZONE NO	PART NUMBER	DESCRIPTION 1 2 3 4 5 6 7	UNITS PER ASSY.	USABLE ON CODE
52-11		RX20808-181	. . . Plate Assy	2	
		MS35276-295	. . . Screw (AP)	4	
		LD153-0010-0012	. . . Washer (AP)	4	
-12		RX20808-191	. . . Plate Assy	1	
		MS35276-295	. . . Screw (AP)	4	
		LD153-0010-0014	. . . Washer (AP)	4	
-13 THRU -17		DELETED			
-18		308798	. . BALL ASSY, Checkout valve	REF	
-19		RK395-10020	. . . Closure Assy, Ball valve	2	
-20		RK395-50029	. . . Cap, Ball valve	2	

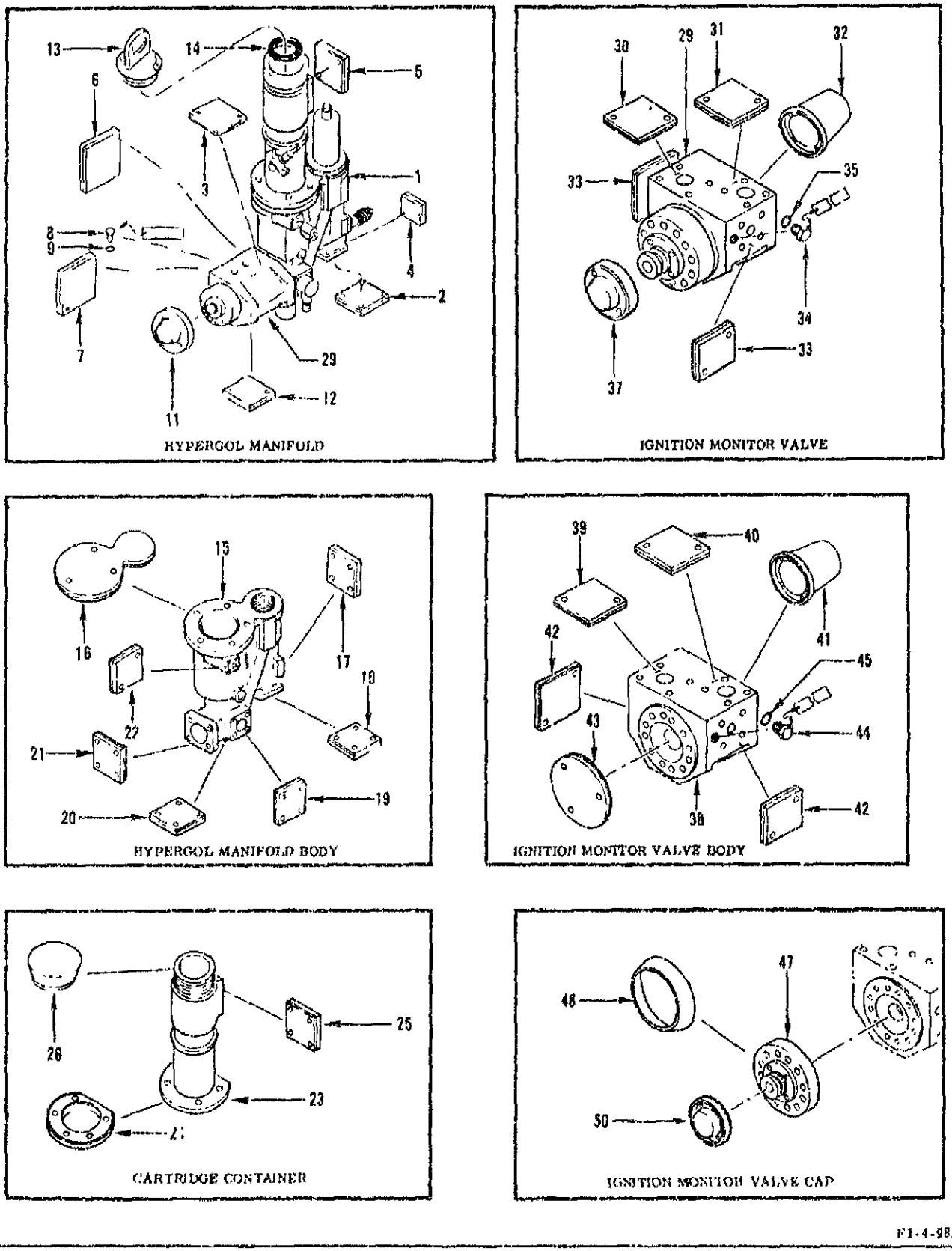

Figure 53. Hypergol Manifold and Ignition Monitor Valve Closures

FIG & INDEX NO.	ZONE NO	PART NUMBER	DESCRIPTION 1 2 3 4 5 6 7	UNITS PER ASSY	USABLE ON CODE
53-		RK395-00024	HYPERGOL MANIFOLD AND IGNITION MONITOR VALVE CLOSURES (See figure 1 for REQMT)	REF	
		RX50051	. PROTECTIVE CLOSURE INSTL, Hypergol	1	
- 1		407791	. . MANIFOLD ASSY, Hypergol	REF	
- 2		RX20873-41	. . . Plate Assy	1	
		MS35276-280	. . . Screw (AP)	4	
		LD153-0010-0010	. . . Washer (AP)	4	
- 3		RX20660-57	. . . Plate Assy	1	
		MS35276-280	. . . Screw (AP)	2	
		LD153-0010-0010	. . . Washer (AP)	2	
- 4		RX20660-63	. . . Plate Assy	1	
		MS35276-264	. . . Screw (AP)	4	
		LD153-0010-0008	. . . Washer (AP)	4	
- 5		RX20617	. . . Plate Assy, Fuel line	1	
		MS35276-280	. . . Screw (AP)	4	
		LD153-0010-0010	. . . Washer (AP)	4	
- 6		RX20660-27	. . . Plate Assy	1	
		MS35276-280	. . . Screw (AP)	2	
		LD153-0010-0010	. . . Washer (AP)	2	
- 7		RX20660-45	. . . Plate Assy	1	
		MS35276-280	. . . Screw (AP)	2	
		LD153-0010-0010	. . . Washer (AP)	2	
- 8		RX20845-31	. . . Closure Assy, LOX valve	1	
- 9		MS29512-04	. . . Packing	1	
-10		DELETED			
-11		RK395-10042	. . . Closure Assy, Molded	1	
		MS35276-279	. . . Screw (AP)	2	
		LD153-0010-0010	. . . Washer (AP)	2	
-12		RX20660-57	. . . Plate Assy	1	
		MS35276-280	. . . Screw (AP)	2	
		LD153-0010-0010	. . . Washer (AP)	2	
-13		RX20641	. . . Closure Assy, Cartridge, hypergol	1	
-14		MS29513-224	. . . Packing	1	
-15		406110	. . BODY ASSY, Hypergol manifold	REF	
-16		RX20814	. . . Cover Assy, Hypergol manifold	1	
		MS35276-294	. . . Screw (AP)	3	
		LD153-0010-0012	. . . Washer (AP)	3	
-17		RX20832-11	. . . Closure Assy	1	
		MS35276-264	. . . Screw (AP)	2	
		MS35276-280	. . . Screw (AP)	2	
		LD153-0010-0008	. . . Washer (AP)	2	
		LD153-0010-0010	. . . Washer (AP)	2	
-18		RX20873-41	. . . Plate Assy	1	
		MS35276-280	. . . Screw (AP)	4	
		LD153-0010-0010	. . . Washer (AP)	4	
-19		RX20833-31	. . . Plate Assy	1	
		MS35276-264	. . . Screw (AP)	4	
		LD153-0010-0008	. . . Washer (AP)	4	
-20		RX20653	. . . Plate Assy, Control flange	1	
		MS35276-280	. . . Screw (AP)	4	
		LD153-0010-0010	. . . Washer (AP)	4	
-21		RX20803-11	. . . Plate Assy	1	
		NAS601-4-11	. . . Bolt (AP)	4	
		LD153-0010-0010	. . . Washer (AP)	8	
		AN316C4R	. . . Nut (AP)	4	
-22		RX20833-21	. . . Plate Assy	1	
		MS35276-264	. . . Screw (AP)	2	
		LD153-0010-0008	. . . Washer (AP)	2	
-23		406118	. . CONTAINER ASSY, Cartridge	REF	
-24		RX20836	. . . Closure Assy, Cartridge	1	
		NAS601-3-12	. . . Bolt (AP)	5	
		LD153-0010-0008	. . . Washer (AP)	10	
		AN316C3R	. . . Nut (AP)	5	
-25		RX20617	. . . Plate Assy, Fuel line	1	
		MS35276-260	. . . Screw (AP)	4	
		LD153-0010-0010	. . . Washer (AP)	4	
-26		RX20833-3	. . . Cover, Cartridge, hypergol	1	
-27		DELETED			
		RX50057	. PROTECTIVE CLOSURE INSTL, Valve assembly	1	
-28		DELETED			
-29		557200	. . VALVE ASSY, Ignition monitor	REF	
-30		RX20660-45	. . . Plate Assy	1	
		AN501AD416-10	. . . Screw (AP)	2	
		LD153-0010-0010	. . . Washer (AP)	2	

FIG & INDEX NO	ZONE NO	PART NUMBER	DESCRIPTION 1 2 3 4 5 6 7	UNITS PER ASSY	USABLE ON CODE
5J-31		RX20660-27	. . . Plate Assy	1	
		AN501AD416-10	. . . Screw (AP)	2	
		LD153-0010-0010	. . . Washer (AP)	2	
-32		RX20603-21	. . . Closure Assy, Preservation and packaging	1	
		1095-5-9-5	. . . Bushing (MFD by 14497) (AP)	4	
		AN316C4R	. . . Nut (AP)	4	
-33		RX20660-57	. . . Plate Assy	2	
		AN501AD416-10	. . . Screw (AP)	2	
		LD153-0010-0010	. . . Washer (AP)	2	
-34		RX20645-31	. . . Closure Assy, LOX valve	1	
-35		MS29512-01	. . . Packing	1	
-36		DELETED			
-37		RK305-10042	. . . Closure Assy, Molded	1	
		AN501AD416-9	. . . Screw (AP)	2	
		LD153-0010-0010	. . . Washer (AP)	2	
-38		550858	. . BODY ASSY, Pressure actuated valve	REF	
-39		RX20660-47	. . . Plate Assy	1	
		AN501AD416-10	. . . Screw (AP)	2	
		LD153-0010-0010	. . . Washer (AP)	2	
-40		RX20659-27	. . . Plate Assy	1	
		AN501AD416-10	. . . Screw (AP)	2	
		LD153-0010-0010	. . . Washer (AP)	2	
-41		RX20601-21	. . . Closure Assy, Preservation and packaging	1	
		1095-5-9-5	. . . Bushing (MFD by 14497) (AP)	4	
		AN316C4R	. . . Nut (AP)	4	
-42		RX20660-57	. . . Plate Assy	2	
		AN501AD416-10	. . . Screw (AP)	2	
		LD153-0010-0010	. . . Washer (AP)	2	
-43		RX20610-331	. . . Plate Assy	1	
		MS9575-08	. . . Bolt (AP)	3	
		LD153-0010-0010	. . . Washer (AP)	3	
-44		RX20845-31	. . . Closure Assy, LOX valve	1	
-45		MS29512-04	. . . Packing	1	
-46		DELETED			
-47		557163	. . CAP ASSY, Ignition monitor valve	REF	
-48		RX20633-3	. . . Cover, Preservation and packaging	1	
-49		DELETED			
-50		RK305-10042	. . . Closure Assy, Molded	1	
		AN501AD416-9	. . . Screw (AP)	2	
		LD153-0010-0010	. . . Washer (AP)	2	

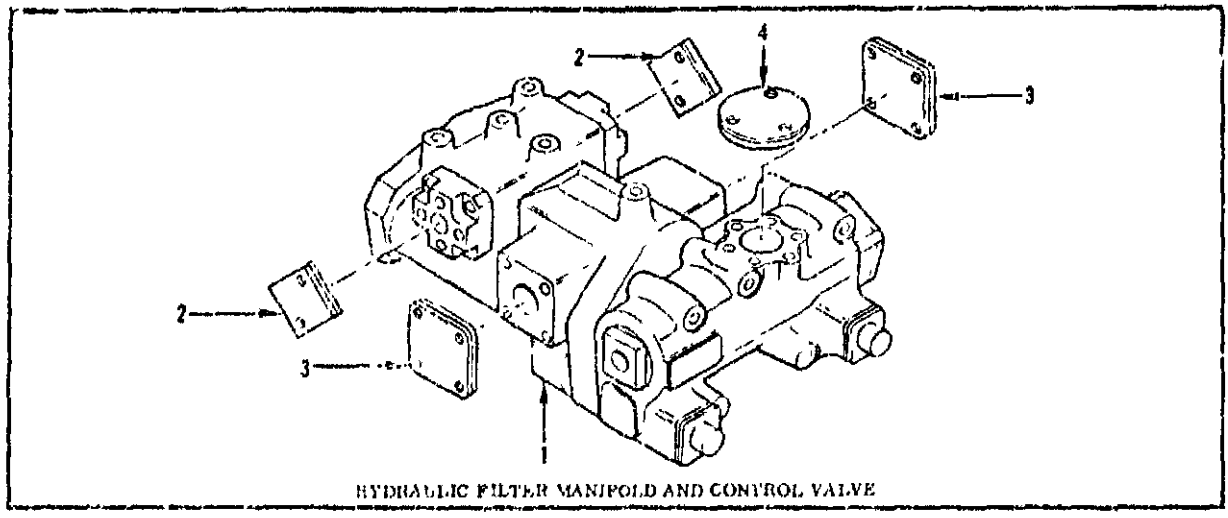

HYDRAULIC FILTER MANIFOLD AND CONTROL VALVE

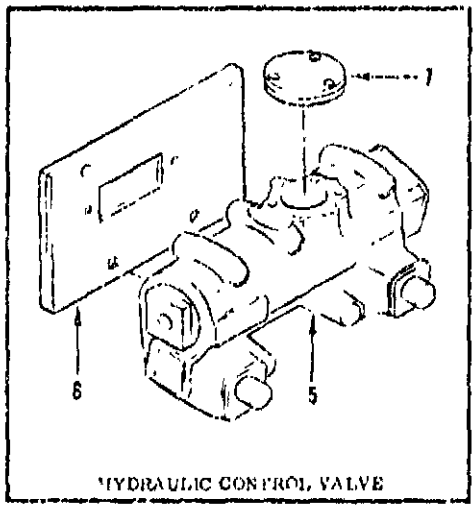

HYDRAULIC CONTROL VALVE

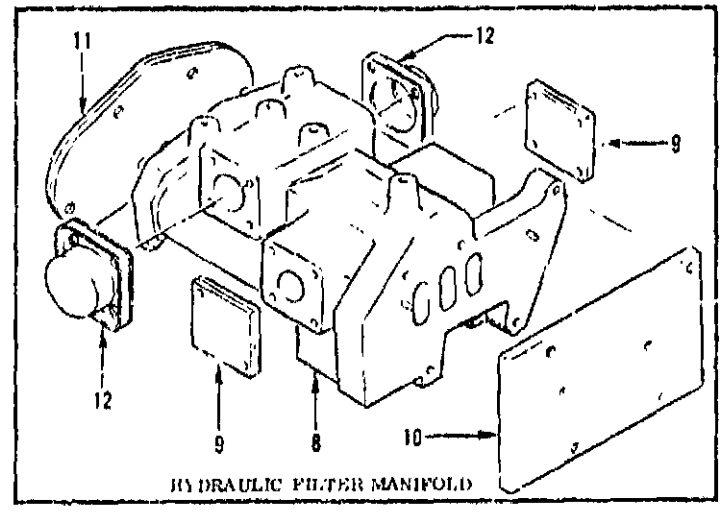

HYDRAULIC FILTER MANIFOLD

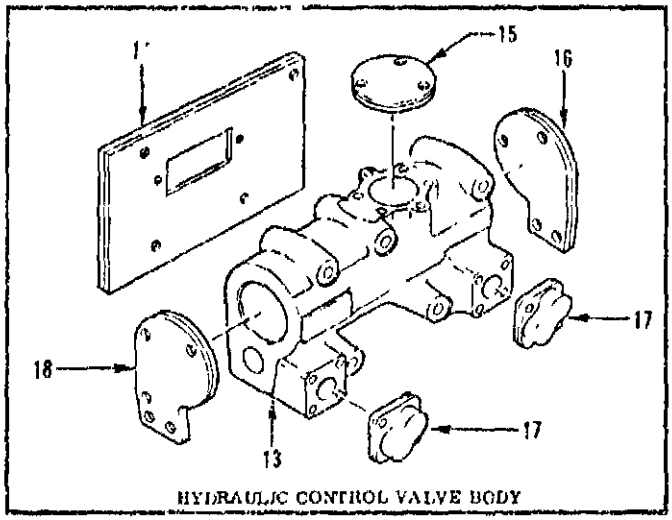

HYDRAULIC CONTROL VALVE BODY

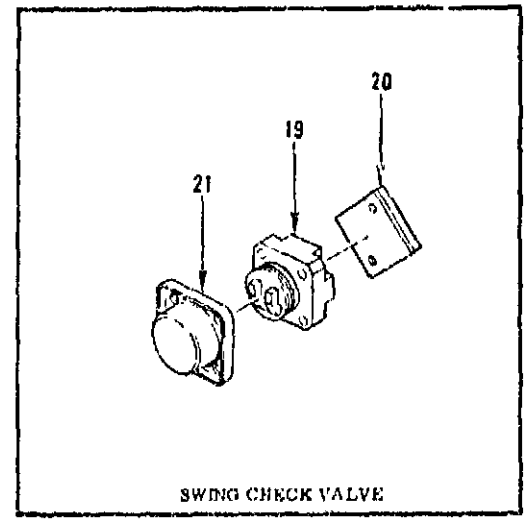

SWING CHECK VALVE

F1-4-99

Figure 54. Hydraulic Filter Manifold and Control Valve Closures

FIG & INDEX NO	ZONE NO	PART NUMBER	DESCRIPTION 1 2 3 4 5 6 7	UNITS PER ASSY	USABLE ON CODE
54-		RK395-00024	HYDRAULIC FILTER MANIFOLD AND CONTROL VALVE CLOSURES. . . . . (See figure 1 for REQMT)	REF	
		RX50233	. PROTECTIVE CLOSURE INSTL, Manifold assembly (Hydraulic filter manifold and control valve closures)	1	
- 1		601675	. . MANIFOLD ASSY, Hydraulic filter and 4-way solenoid valve . . . . . (Engine control valve)	REF	
- 2		RX20660-67	. . . Plate Assy	2	
		MS35276-281	. . . Screw (AP)	2	
		LD153-0010-0010	. . . Washer (AP)	2	
- 3		RX20673-41	. . . Plate Assy	2	
		MS35276-277	. . . Screw (AP)	4	
		LD153-0010-0010	. . . Washer (AP)	2	
- 4		RX20645	. . . Plate Assy, Preservation and packaging,combustor	1	
		MS35276-279	. . . Screw (AP)	3	
		LD153-0010-0010	. . . Washer (AP)	3	
- 5		556966	. . VALVE ASSY, Hydraulic control, 4-way solenoid operated (Hydraulic control valve)	REF	
- 6		RX20824	. . . Plate Assy, Control valve	1	
		NAS501-5-31	. . . Bolt (AP)	2	
		NAS501-5-34	. . . Bolt (AP)	2	
		LD153-0010-0012	. . . Washer (AP)	8	
		AN310C5R	. . . Nut (AP)	4	
- 7		RX20645	. . . Plate Assy, Preservation and packaging, combustor	1	
		MS35276-279	. . . Screw (AP)	3	
		LD153-0010-0010	. . . Washer (AP)	3	
- 8		601094	. . MANIFOLD ASSY, Filter 4-way hydraulic solenoid	REF	
- 9		RX20673-41	. . . Plate Assy	2	
		MS35276-277	. . . Screw (AP)	2	
		LD153-0010-0010	. . . Washer (AP)	2	
-10		RX20817	. . . Plate Assy, Control valve	1	
		MS35276-311	. . . Screw (AP)	1	
		LD153-0010-0014	. . . Washer (AP)	4	
-11		RX20027	. . . Plate Assy, Manifold body	1	
		MS35276-308	. . . Screw (AP)	6	
		LD153-0010-0014	. . . Washer (AP)	6	
-12		RX20733-21	. . . Closure Assy, Preservation and packaging, gas generator control valve	2	
		MS35276-278	. . . Screw (AP)	4	
-13		554476	. . BODY ASSY, 4-way hydraulic control valve	REF	
-14		RX20824	. . . Plate Assy, Control valve	1	
		NAS501-5-31	. . . Bolt (AP)	2	
		NAS501-5-34	. . . Bolt (AP)	2	
		LD153-0010-0012	. . . Washer (AP)	8	
		AN316C5R	. . . Nut (AP)	4	
-15		RX20645	. . . Plate Assy, Preservation and packaging, combustor	1	
		MS35276-279	. . . Screw (AP)	3	
		LD153-0010-0010	. . . Washer (AP)	3	
-16		RX20732	. . . Cover Assy, 4-way control valve	1	
		MS35276-261	. . . Screw (AP)	2	
		MS35276-294	. . . Screw (AP)	2	
		LD153-0010-0008	. . . Washer (AP)	2	
		LD153-0010-0012	. . . Washer (AP)	2	
-17		RX20730	. . . Cover Assy, 4-way control valve	2	
		MS35276-278	. . . Screw (AP)	2	
		LD153-0010-0010	. . . Washer (AP)	2	
-18		RX20732-11	. . . Cover Assy, 4-way control valve	1	
		MS35276-261	. . . Screw (AP)	2	
		LD153-0010-0008	. . . Washer (AP)	2	
-19		601094	. . VALVE ASSY, Swing check (Engine hydraulic supply check valve)	REF	
-20		RX20660-67	. . . Plate Assy	2	
		MS35276-281	. . . Screw (AP)	2	
		LD153-0010-0010	. . . Washer (AP)	2	
-21		RX20733-21	. . . Closure Assy, Preservation and packaging, gas generator control valve	2	
		MS35276-284	. . . Screw (AP)	4	
		LD153-0010-0010	. . . Washer (AP)	4	
		AN310C4R	. . . Nut (AP)	4	

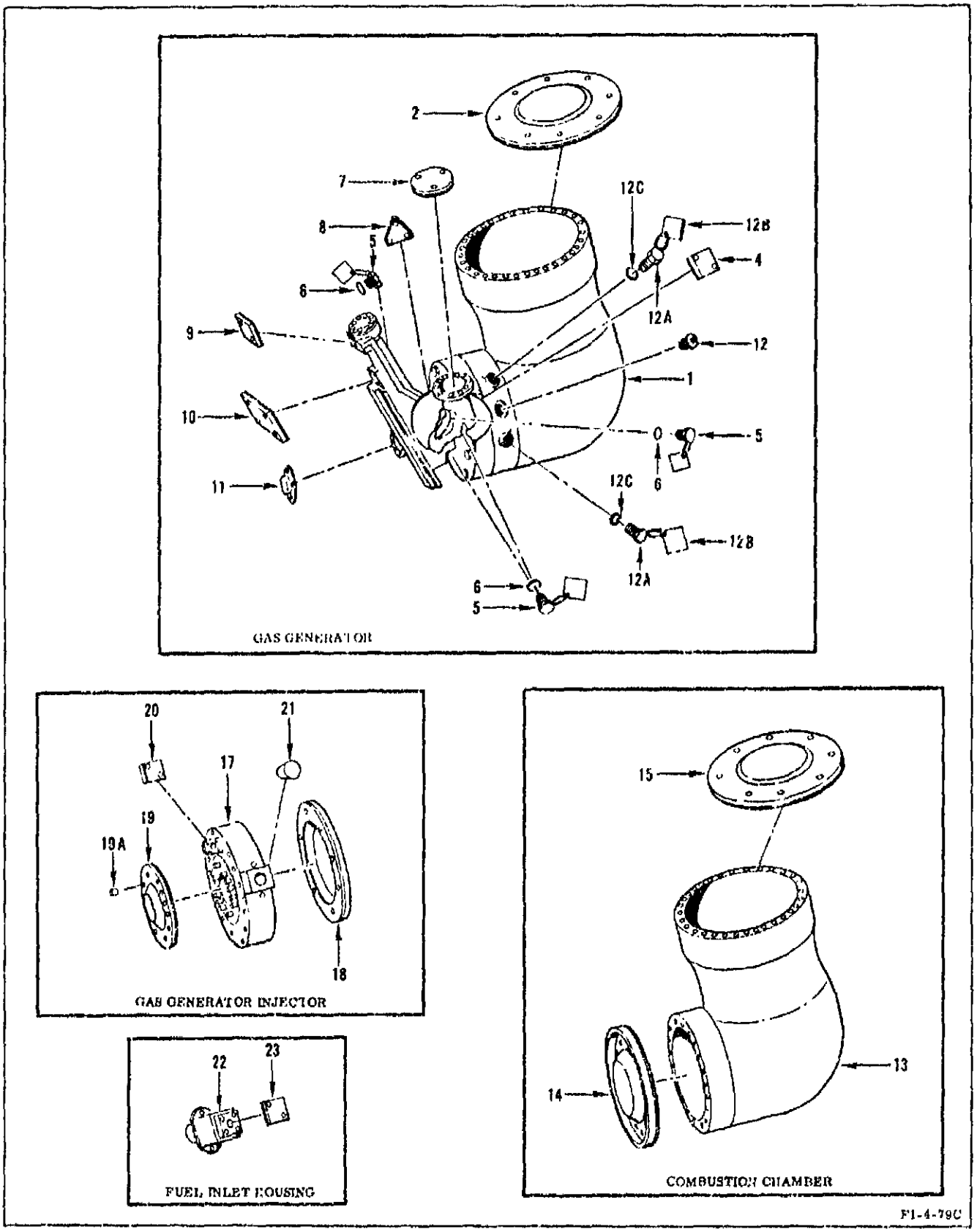

Figure 55. Gas Generator Closures

FIG & INDEX NO	ZONE NO	PART NUMBER	1 2 3 4 5 6 7 DESCRIPTION	UNITS PER ASSY.	USABLE ON CODE
55-		RK395-00024	GAS GENERATOR CLOSURES (See figure 1 for REQMT)	REF	
		RK395-00033	. PROTECTIVE CLOSURE INSTL, Gas generator	1	
- 1		308375-11	. . GAS GENERATOR ASSY	REF	
- 1		308375-21	. . GAS GENERATOR ASSY	REF	
- 1		308375-31	. . GAS GENERATOR ASSY	REF	
- 1		308375-41	. . GAS GENERATOR ASSY	REF	
- 1		308375-51	. . GAS GENERATOR ASSY	REF	
- 2		RX20601	. . . Closure Assy, Preservation and packaging, gas generator combustion chamber	1	
		NAS501-8H6A	. . . Bolt (AP)	8	
		LD153-0010-0018	. . . Washer (AP)	8	
- 3		DELETED			
- 4		RX20660-33	. . . Plate Assy	1	
		AN501AD416-8	. . . Screw (AP)	2	
		LD153-0010-0010	. . . Washer (AP)	2	
- 5		RX20845-21	. . . Closure Assy, LOX valve	4	
- 6		MS29512-04	. . . Packing	4	
- 7		RX20610-281	. . . Plate Assy	1	
		AN501AD616-10	. . . Screw (AP)	4	
		LD153-0010-0014	. . . Washer (AP)	4	
- 8		RX20123	. . . Cover Assy, Preservation and packaging, vernier poppet valve	1	
		AN501AD416-8	. . . Screw (AP)	3	
		LD153-0010-0010	. . . Washer (AP)	3	
- 9		RX20660-57	. . . Plate Assy	1	
		AN501AD416-8	. . . Screw (AP)	4	
		LD153-0010-0010	. . . Washer (AP)	4	
-10		RX20911	. . . Plate Assy, Gas generator ball valve	1	
		AN501AD416-8	. . . Screw (AP)	4	
		LD153-0010-0010	. . . Washer (AP)	4	
-11		RX20607	. . . Closure Assy, Preservation and packaging	1	
		MS35276-308	. . . Screw (AP)	4	
		LD153-0010-0012	. . . Washer (AP)	4	
-12		RD765-2001-0004	. . . Plug	1	
		ST3950122RKL001	. . PLUG ASSY, Port, Igniter, gas generator	2	
-12A		ST3950122RKL003	. . . Plug, Port, Igniter, gas generator (Plug MS9015-08 may be used as an alternate)	2	
-12B		ST3950122RKL005	. . . Streamer, Port, Igniter, gas generator	2	
-12C		651912-3	. . . Gasket, Igniter, high voltage copper crush (NHA 051990-11) (Gasket AN901-8C may be used as an alternate with plug MS9015-08)	2	
-13		308302-21	. . CHAMBER ASSY, Combustion (Gas generator combustor)	REF	
-13		308302-31	. . CHAMBER ASSY, Combustion (Gas generator combustor)	REF	
-14		RX20600	. . . Closure Assy, Preservation and packaging, gas generator combustion chamber	1	
		AN501AD616-10	. . . Screw (AP)	8	
		LD153-0010-0014	. . . Washer (AP)	8	
-15		RX20601	. . . Closure Assy, Preservation and packaging, gas generator combustion chamber	1	
		NAS501-8H6A	. . . Bolt (AP)	8	
		LD153-0010-0018	. . . Washer (AP)	8	
-16		DELETED			
-17		308374	. . INJECTOR ASSY, Gas generator	REF	
-17		309149	. . INJECTOR ASSY, Gas generator	REF	
-17		309149-11	. . INJECTOR ASSY, Gas generator	REF	
-18		RX20600	. . . Closure Assy, Preservation and packaging, gas generator combustion chamber	1	
		NAS501-6-31	. . . Bolt (AP)	8	
		LD153-0010-0014	. . . Washer (AP)	10	
		AN316C6R	. . . Nut (AP)	8	
-19		RX20603-11	. . . Closure Assy, Preservation and packaging, gas generator injector assembly	1	
		1095-6-14-4	. . . Spacer (MFD by 14497) (AP)	4	
		AN316C5R	. . . Nut (AP)	4	
-19A		519	. . . Cap (MFD by 20767)	10	
-20		RX20660-33	. . . Plate Assy	1	
		NAS501-4-13	. . . Bolt (AP)	2	
		LD153-0010-0010	. . . Washer (AP)	4	
		AN316C4R	. . . Nut (AP)	2	
-21		RX20633-3	. . . Cover, Preservation and packaging	1	
-22		308315	. . FUEL INLET HOUSING	REF	
-23		RX20660-33	. . . Plate Assy	1	
		AN501AD416-8	. . . Screw (AP)	2	
		LD153-0010-0010	. . . Washer (AP)	2	

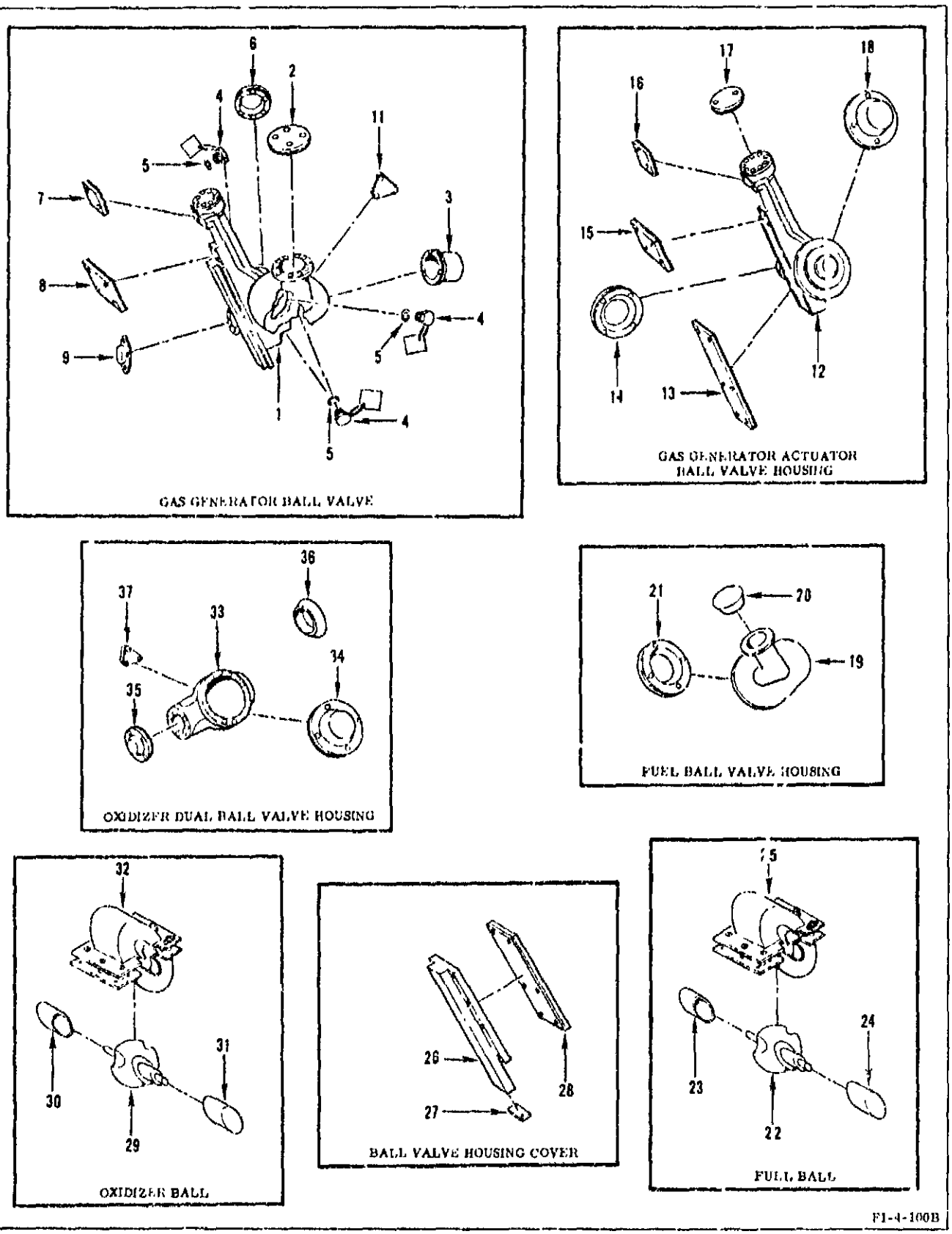

Figure 56. Gas Generator Control Valve Closures

FIG & INDEX NO	ZONE NO	PART NUMBER	DESCRIPTION 1 2 3 4 5 6 7	UNITS PER ASSY	USABLE ON CODE
56-		RK395-00024	GAS GENERATOR CONTROL VALVE CLOSURES (See figure 1 for REQMT)	REF	
		RK395-00034	. PROTECTIVE CLOSURE INSTL, Control valve, gas generator system	1	
- 1		309110	. . VALVE ASSY, Ball, gas generator	REF	
- 1		306866	. . VALVE ASSY, Ball, gas generator	REF	
- 2		RX20610-281	. . . Plate Assy	1	
		RD111-6001 0601	. . . Screw (AP)	4	
- 3		RX20603-11	. . . Closure Assy, Preservation and packaging	1	
		RD111-6001-0401	. . . Screw (AP)	3	
- 4		RX20945-21	. . . Closure Assy, LOX valve	4	
- 5		MS29512-04	. . . Packing	4	
- 6		RX20605	. . . Closure Assy, Preservation and packaging, gas generator injector assembly	1	
		NAS501-5-12	. . . Bolt (AP)	8	
		LD153-0010-0012	. . . Washer (AP)	16	
		AN316C5R	. . . Nut (AP)	8	
- 7		RX20660-57	. . . Plate Assy	1	
		RD111-6001-0401	. . . Screw (AP)	2	
- 8		RX20911	. . . Plate Assy, Gas generator ball valve	1	
		RD111-6001-0401	. . . Screw (AP)	4	
- 9		RX20607	. . . Closure Assy, Preservation and packaging	1	
		RD111-6001-0501	. . . Screw (AP)	4	
-10		DELETED			
-11		RX20123	. . . Cover Assy, Preservation and packaging, vernier poppet valve	1	
		RD111 6001-0401	. . . Screw (AP)	3	
-12		308651	. . HOUSING ASSY, Actuator, gas generator ball valve	REF	
-12		306808	. . HOUSING ASSY, Actuator, gas generator ball valve	REF	
-13		RX20796	. . . Plate Assy, Actuator housing	1	
		RD111-6001-0301	. . . Screw (AP)	6	
-14		RX20717-41	. . . Closure Assy	1	
		NAS501-6-13	. . . Bolt (AP)	4	
		LD153-0010-0014	. . . Washer (AP)	8	
		AN316C6R	. . . Nut (AP)	4	
-15		RX20911	. . . Plate Assy, Gas generator ball valve	1	
		RD111-6001-0401	. . . Screw (AP)	4	
-16		RX20660-57	. . . Plate Assy	1	
		RD111-6001-0101	. . . Screw (AP)	2	
-17		RX20868-21	. . . Plate Assy	1	
		RD111-6001-0401	. . . Screw (AP)	1	
-18		RX20717-41	. . . Closure Assy	1	
		NAS501-6-13	. . . Bolt (AP)	4	
		LD153-0010-0014	. . . Washer (AP)	8	
		AN316C6R	. . . Nut (AP)	4	
-19		302930	. . HOUSING ASSY, Fuel ball	REF	
-20		RX20633-7	. . . Cover, Preservation and packaging	2	
-21		RX20717-41	. . . Closure Assy	1	
		RD111-6001-0601	. . . Screw (AP)	4	
-22		308410	. . BALL ASSY, Fuel, dual ball valve	REF	
-23		RK395-50029 003	. . . Cap, Ball valve	1	
-24		RK395-50029	. . . Cap, Ball valve	1	
-25		RK395-10020-011	. . . Closure Assy, Ball valve	2	
-26		309109	. . COVER ASSY, Potentiometer housing, ball valve, gas generator	REF	
-27		RX20660-57	. . . Plate Assy	1	
		AN515C6-8	. . . Screw (AP)	2	
		LD133-0010-0004	. . . Washer (AP)	2	
-28		RX20796	. . . Plate Assy, Actuator housing	1	
		NAS501-3-10	. . . Bolt (AP)	6	
		LD153-0010-0008	. . . Washer (AP)	12	
		AN121526	. . . Nut (AP)	6	
-29		303071	. . BALL ASSY, Oxidizer, dual ball valve	REF	
-30		RK395-50029-003	. . . Cap, Ball valve	1	
-31		RK395-50029	. . . Cap, Ball valve	1	
-32		RK395-10020-021	. . . Closure Assy, Ball valve	2	
-33		303015	. . HOUSING ASSY, Oxidizer, dual ball valve	REF	
-33		306867	. . HOUSING ASSY, Oxidizer, dual ball valve	REF	
-34		RX20717-41	. . . Closure Assy	1	
		RD111-6001-0001	. . . Screw (AP)	4	
-35		RX20607	. . . Closure Assy, Preservation and packaging	1	
		RD111-6001-0501	. . . Screw (AP)	4	
-36		RX20633-7	. . . Cover, Preservation and packaging	1	
-37		RX20123	. . . Cover Assy, Preservation and packaging, vernier poppet valve	1	
		RD111-6001-0401	. . . Screw (AP)	3	

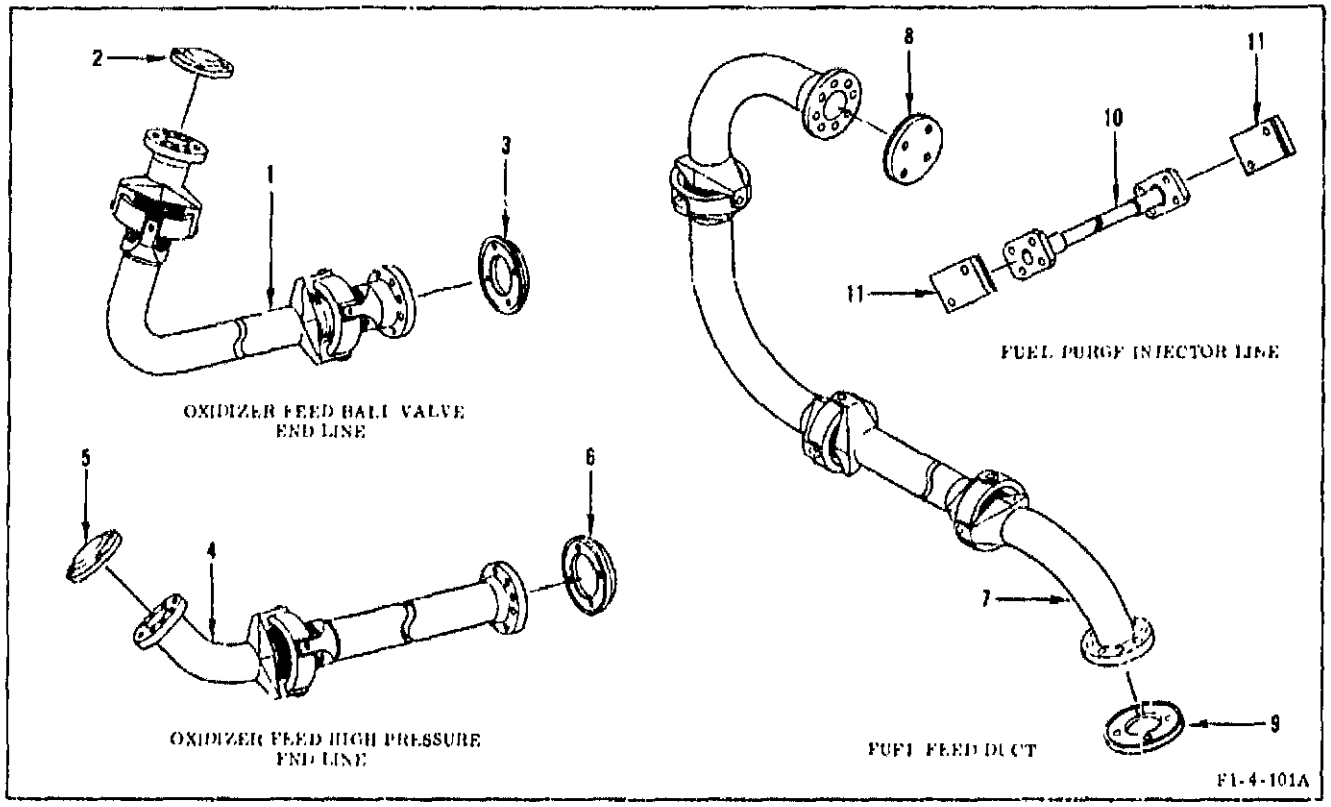

Figure 57. Gas Generator Line Closures

FIG & INDEX NO	ZONE NO	PART NUMBER	DESCRIPTION 1 2 3 4 5 6 7	UNITS PER ASSY	USABLE ON CODE
57-		RK395-00024	GAS GENERATOR LINE CLOSURES (See figure 1 for REQMT)	REF	
		RK395-00026	. PROTECTIVE CLOSURE INSTL, Gas generator system (Gas generator line and duct closures)	1	
- 1		309631-31	. . LINE ASSY, Oxidizer feed, ball valve end (Gas generator oxidizer duct (Valve end))	REF	
- 2		RX20605-41 (a)	. . . Closure Assy, Preservation and packaging, gas generator injector assembly	1	
		NAS501-5-11	. . . Bolt (AP)	4	
		LD153-0010-0012	. . . Washer (AP)	8	
		AN316C5R	. . . Nut (AP)	4	
- 3		RX20607-61 (a)	. . . Closure Assy, Preservation and packaging	1	
		NAS501-5-11	. . . Bolt (AP)	4	
		LD153-0010-0012	. . . Washer (AP)	8	
		AN316C5R	. . . Nut (AP)	4	
- 4		307077	. . LINE ASSY, Gas generator, oxidizer feed, high pressure duct end (Gas generator oxidizer duct) (Duct end)	REF	
- 5		RX20607-31 (a)	. . . Closure Assy, Preservation and packaging	1	
		NAS501-5-11	. . . Bolt (AP)	4	
		LD153-0010-0012	. . . Washer (AP)	8	
		AN316C5R	. . . Nut (AP)	4	
- 6		RX20605-41 (a)	. . . Closure Assy, Preservation and packaging, gas generator injector assembly	1	
		NAS501-5-12	. . . Bolt (AP)	4	
		LD153-0010-0012	. . . Washer (AP)	8	
		AN316C5R	. . . Nut (AP)	4	
- 7		308978	. DUCT ASSY, Feed, fuel, gas generator fuel duct)	REF	
- 8		RX20610-221 (a)	. . . Plate Assy	1	
		NAS501-6-14	. . . Bolt (AP)	4	
		LD153-0010-0014	. . . Washer (AP)	8	
		AN316C6R	. . . Nut (AP)	4	
- 9		RX20607-81 (a)	. . . Closure Assy, Preservation and packaging	1	
		NAS501-6-14	. . . Bolt (AP)	4	
		LD153-0010-0014	. . . Washer (AP)	8	
		AN316C6R	. . . Nut (AP)	4	

(a) See figure 61 for Alternate Closure Installation on line flanges 6 inches or less.

FIG & INDEX NO	ZONE NO	PART NUMBER	DESCRIPTION 1 2 3 4 5 6 7	UNITS PER ASSY	USABLE ON CODE
57-10		308441	. . TUBE ASSY, Purge, cocoon	REF	
-11		IUX20660-33 (a)	. . . Plate Assy	2	
		NAS501 4-10	. . . Bolt (AP)	2	
		LD153-0010-0010	. . . Washer (AP)	4	
		AN316C4R	. . . Nut (AP)	2	

(a) See figure 61 for Alternate Closure Installation on line flanges 6 inches or less.

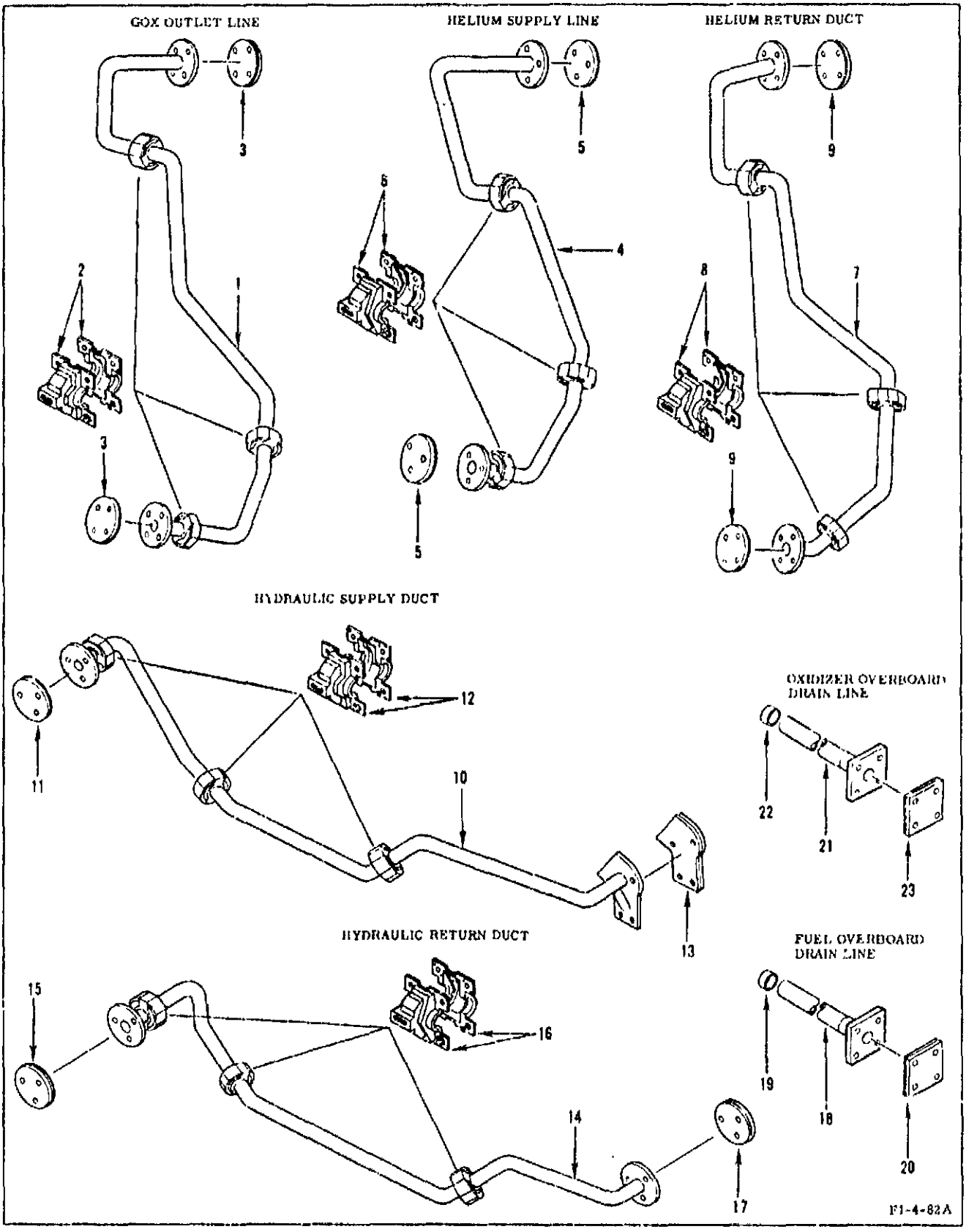

Figure 58. Loose Equipment Line Closures

F & I INDEX NO	ZONE NO	PART NUMBER	DESCRIPTION 1 2 3 4 5 6 7	UNITS PER ASSY	USABLE ON CODE
58-		RK395-00024	LOOSE EQUIPMENT LINE CLOSURES (See figure 1 for REQMT)	REF	
		RK395-00029	. PROTECTIVE CLOSURE INSTL, Loose equipment (Loose equipment list line closures)	1	
- 1		406070	. . DUCT ASSY, GOX outlet, customer connect (GOX wrap-around duct)	REF	
- 2		ST3950165RKL001	. . . Closure Assy, Gimbal retainer (Alternate RK395-10033-011)	6	
		AN3-3	. . . Bolt (AP)	4	
		LD153-0010-0008	. . . Washer (AP)	8	
		MS35426-13	. . . Nut (AP)	2	
- 3		RK395-10002-011 (a)	. . . Plate Assy, Round	2	
		NAS501-5-12	. . . Bolt (AP)	4	
		LD153-0010-0012	. . . Washer (AP)	8	
		AN316C5R	. . . Nut (AP)	4	
- 4		406073	. . DUCT ASSY, Helium supply, customer connect (Helium supply wrap-around duct)	REF	
- 5		RK395-10023-021 (a)	. . . Plate Assy, Round	2	
		NAS501-5-12	. . . Bolt (AP)	3	
		LD153-0010-0012	. . . Washer (AP)	6	
		AN316C5R	. . . Nut (AP)	3	
- 6		ST3950164RKL011	. . . Closure Assy, Gimbal retainer (Alternate RK395-10032-041)	6	
		AN3-3	. . . Bolt (AP)	4	
		LD153-0010-0008	. . . Washer (AP)	8	
		MS35426-13	. . . Nut (AP)	2	
- 7		406075	. . DUCT ASSY, Helium return, customer connect (Helium return wrap-around duct)	REF	
- 8		ST3950164RKL001	. . . Closure Assy, Gimbal retainer (Alternate RK395-10032-031)	6	
		AN3-3	. . . Bolt (AP)	4	
		LD153-0010-0008	. . . Washer (AP)	8	
		MS35426-13	. . . Nut (AP)	2	
- 9		RK395-10002-011 (a)	. . . Plate Assy, Round	2	
		NAS501-5-12	. . . Bolt (AP)	4	
		LD153-0010-0012	. . . Washer (AP)	8	
		AN316C5R	. . . Nut (AP)	4	
-10		406071	. . DUCT ASSY, Hydraulic supply customer connect (Hydraulic supply wrap-around duct)	REF	
-11		RK395-10023-011 (a)	. . . Plate Assy, Round	1	
		NAS501-4-12	. . . Bolt (AP)	3	
		LD153-0010-0010	. . . Washer (AP)	6	
		AN316C4R	. . . Nut (AP)	3	
-12		ST3950165RKL001	. . . Closure Assy, Gimbal retainer (Alternate RK395-10033-011)	6	
		AN3-3	. . . Bolt (AP)	4	
		LD153-0010-0008	. . . Washer (AP)	8	
		MS35426-13	. . . Nut (AP)	2	
-13		RK395-10024 (a)	. . . Plate Assy, Supply duct	1	
		RD111-6001-0501	. . . Screw (AP)	2	
		RD111-6001-0401	. . . Screw (AP)	3	
		LD153-0010-0012	. . . Washer (AP)	2	
		LD153-0010-0010	. . . Washer (AP)	2	
-14		406072	. . DUCT ASSY, Hydraulic return, customer connect (Hydraulic return wrap-around duct)	REF	
-15		RK395-10023-011 (a)	. . . Plate Assy, Round	1	
		NAS501-4-12	. . . Bolt (AP)	3	
		LD153-0010-0010	. . . Washer (AP)	6	
		AN316C4R	. . . Nut (AP)	3	
-16		ST3950164RKL001	. . . Closure Assy, Gimbal retainer (Alternate RK395-10032-031)	6	
		AN3-3	. . . Bolt (AP)	4	
		LD153-0010-0008	. . . Washer (AP)	8	
		MS35426-13	. . . Nut (AP)	2	
-17		RK395-10023 (a)	. . . Plate Assy, Round	1	
		NAS501-4-12	. . . Bolt (AP)	3	
		LD153-0010-0010	. . . Washer (AP)	6	
		AN316C4R	. . . Nut (AP)	3	

(a) See figure 61 for Alternate Closure Installation on line flanges 6 inches or less.

FIG & INDEX NO	ZONE NO	PART NUMBER	1 2 3 4 5 6 7 DESCRIPTION	UNITS PER ASSY.	USABLE ON CODE
58-18		651283	. . LINE ASSY, Overboard drain fuel	REF	
-19		1704-332Y	. . . Cap (MFD by 97945)	1	
-20		RK395-10004-021 (a)	. . . Plate Assy, Square	1	
		NAS501-5-12	. . . Bolt (AP)	4	
		LD153-0010-0012	. . . Washer (AP)	6	
		AN316C5R	. . . Nut (AP)	4	
-21		651284	. . LINE ASSY, Oxidizer, overboard drain	REF	
-22		1704-340Y	. . . Cap (MFD by 97945)	1	
-23		RX20636 (a)	. . . Plate Assy, LOX bleed line	1	
		NAS501-4-10	. . . Bolt (AP)	4	
		LD153-0010-0010	. . . Washer (AP)	8	
		AN316C4R	. . . Nut (AP)	4	

(a) See figure 61 for Alternate Closure Installation on line flanges 6 inches or less.

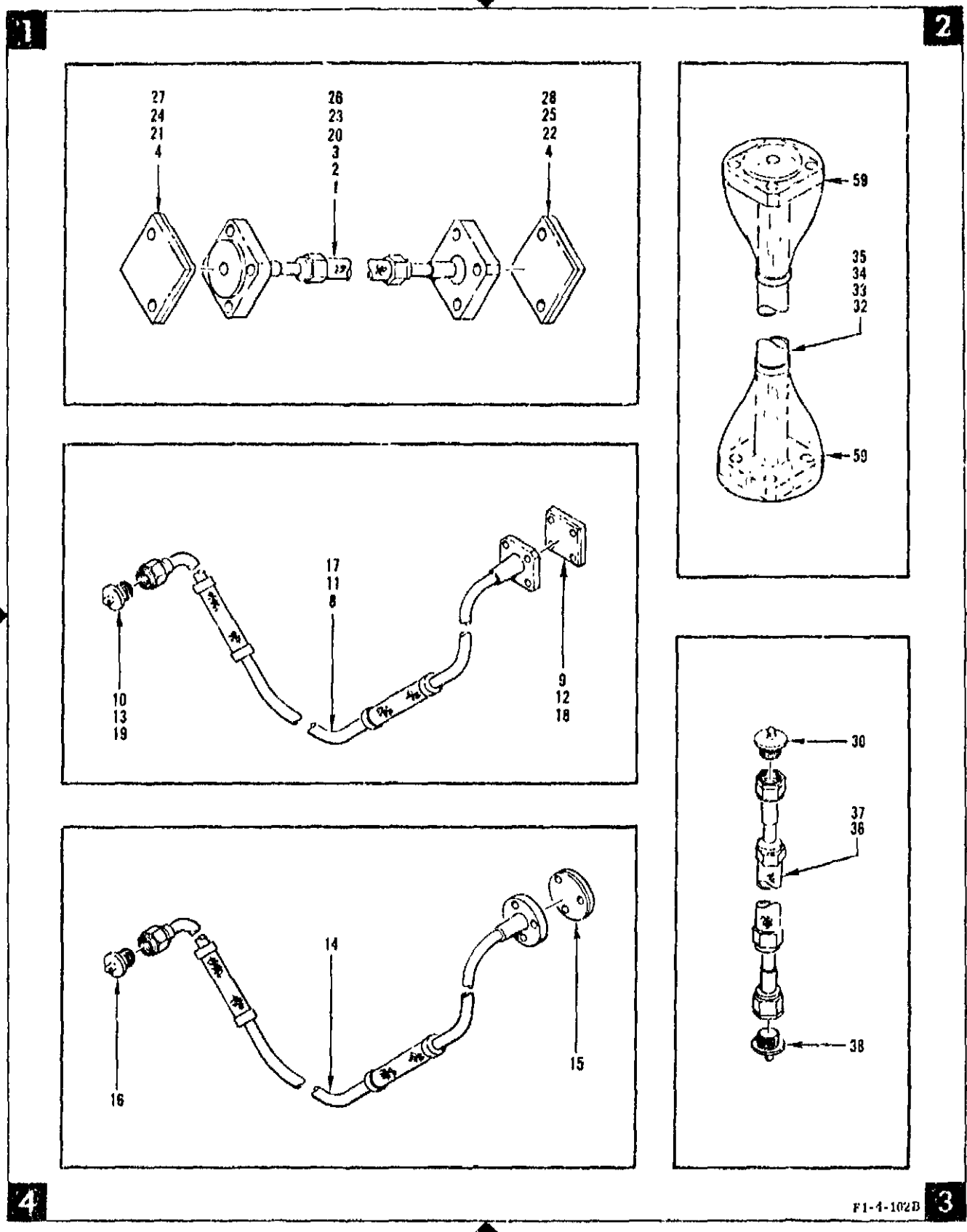

Figure 59. Flexible Hose Line Closures (Sheet 1 of 2)

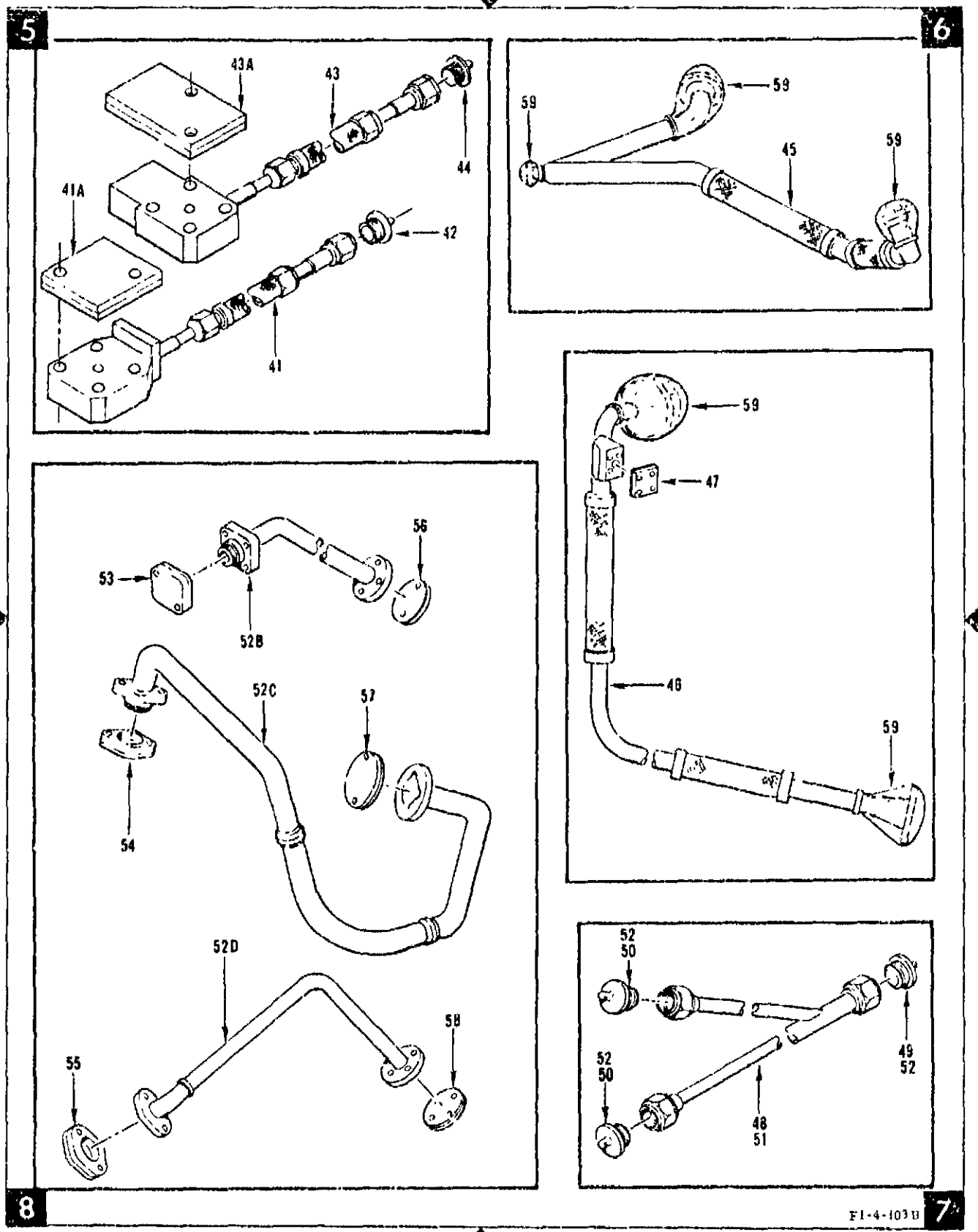

Figure 59. Flexible Hose Line Closures (Sheet 2 of 2)

FIG & INDEX NO	ZONE NO	PART NUMBER	DESCRIPTION 1 2 3 4 5 6 7	UNITS PER ASSY	USABLE ON CODE
50		RK395-00024	FLEXIBLE HOSE LINE CLOSURES (See figure 1 for REQMT)	REF	
		RK395-00059	. PROTECTIVE CLOSURE INSTL, Flexible, test hose (Flexible test hose line closures)	1	
- 1	1	703203-181	. . HOSE ASSY, Flexible, instrumentation (Turbine outlet pressure hose)	REF	
- 2	1	703203-261	. . HOSE ASSY, Flexible, instrumentation (Turbine outlet pressure hose)	REF	
- 3	1	703203-441	. . HOSE ASSY, Flexible, instrumentation (Turbine outlet pressure hose)	REF	
- 4	1,2	RX20660-33 (a)	. . . Plate Assy	2	
		NAS501-4-11	. . . Bolt (AP)	2	
		LD153-0010-0010	. . . Washer (AP)	4	
		AN316C4R	. . . Nut (AP)	2	
5 THRU - 7		DELETED			
- 8	1	NA5-26861	HOSE ASSY, Turbopump LOX seal purge, customer connect (Turbopump oxidizer intermediate seal purge wrap-around hose)	REF	
- 9	3	RX20660-45 (a)	. . Plate Assy	1	
		NAS501-4-10	. . Bolt (AP)	4	
		LD153-0010-0010	. . Washer (AP)	8	
		AN316C4R	. . Nut (AP)	4	
-10	4	RD265-2001-0008	. . Plug	1	
-11	1	NA5-26862	. HOSE ASSY, LOX dome purge, customer connect (Oxidizer dome purge wrap-around hose)	REF	
-12	3	RX20660-45 (a)	. . Plate Assy	1	
		NAS501-4-10	. . Bolt (AP)	4	
		LD153-0010-0010	. . Washer (AP)	8	
		AN316C4R	. . Nut (AP)	4	
-13	4	RD265-2001-0008	. . Plug	1	
-14	4	NA5-26863	. HOSE ASSY, Thrust chamber jacket pre-fill, customer connect (Prefill wrap-around hose)	REF	
-15	3	RX20615-21 (a)	. . Plate Assy, Preservation and packaging, combustor	1	
		NAS501-4-10	. . Bolt (AP)	3	
		LD153-0010-0010	. . Washer (AP)	6	
		AN316C4R	. . Nut (AP)	3	
-16	4	RD265-2001-0005	. . Plug	1	
-17	1	NA5-26864	. HOSE ASSY, Gas generator fuel injector purge and thermal insulation purge, customer connect (Cocoon purge wrap-around hose)	REF	
-18	3	RX20610-171 (a)	. . Plate Assy	1	
		NAS501-4-10	. . Bolt (AP)	4	
		LD153-0010-0010	. . Washer (AP)	8	
		AN316C4R	. . Nut (AP)	4	
-19	4	RD265-2001-0005	. . Plug	1	
-20	1	409262	. HOSE ASSY, Flexible, NO 2 fuel bleed line (NO. 2 fuel bleed hose)	REF	
-21	1	RX20660-57 (a)	. . Plate Assy	1	
		NAS501-4-10	. . Bolt (AP)	2	
		LD153-0010-0010	. . Washer (AP)	4	
		AN316C4R	. . Nut (AP)	2	
-22	2	RX20660-33 (a)	. . Plate Assy	1	
		NAS501-4-6	. . Bolt (AP)	2	
		LD153-0010-0010	. . Washer (AP)	1	
		AN316C4R	. . Nut (AP)	2	
-23	1	409848	. HOSE ASSY, Drain turbine bearing lube	REF	
-24	1	RX20660-33 (a)	. . Plate Assy	1	
		NAS501-4-12	. . Bolt (AP)	2	
		LD153-0010-0010	. . Washer (AP)	4	
		AN316C4R	. . Nut (AP)	2	
-25	2	RX20660-65 (a)	. . Plate Assy	1	
		NAS501-4-12	. . Bolt (AP)	4	
		LD153-0010-0010	. . Washer (AP)	8	
		AN316C4R	. . Nut (AP)	4	
-26	1	602087	. HOSE ASSY, Ground supply, hydraulic (Engine control valve ground hydraulic supply hose)	REF	
-27	1	RX20660-67 (a)	. . Plate Assy	1	
		NAS501-4-11	. . Bolt (AP)	4	
		LD153-0010-0010	. . Washer (AP)	8	
		AN316C4R	. . Nut (AP)	4	
-28	2	RK395-44001-011 (a)	. . Plate Assy, Rectangular	1	
		NAS501-4-12	. . Bolt (AP)	2	
		LD153-0010-0010	. . Washer (AP)	4	
		AN316C4R	. . Nut (AP)	2	
-29 THRU -31		DELETED			

(a) See figure 61 for Alternate Closure Installation on line flanges 6 inches or less.

FIG 2 INDEX NO	ZONE NO.	PART NUMBER	DESCRIPTION 1 2 3 4 5 6 7	UNITS PER ASSY.	USABLE ON CODE
59-32	2	NA5-26753	. HOSE ASSY, Heat exchanger helium by-pass	REF	
-33	2	NA5 260102	. HOSE ASSY, Heat exchanger, LOX by-pass (Oxidizer by-pass hose)	REF	
-33	2	NA5-260162	. HOSE ASSY, Heat exchanger, LOX by-pass (Oxidizer by-pass hose)	REF	
-34	2	NA5-260163	. HOSE ASSY, Hypergol manifold to thrust chamber injector (Hypergol manifold outlet hose)	REF	
-35	2	NA5-260158	. HOSE ASSY, Hydraulic return, checkout valve to hydraulic supply W/A duct (Checkout valve ground return hose)	REF	
-36	3	703202-161	. HOSE ASSY, Flexible (Gas generator turbine seal vent hose)	REF	
-37	3	703202-321	. HOSE ASSY, Flexible (Gas generator injector seal vent hose)	REF	
-38	3	RD265-2001-0002	. . Plug	2	
-39		DELETED			
-40		DELETED			
-41	5	602145	. HOSE ASSY, Flexible, solenoid valve inlet (Redundant shutdown valve supply hose)	REF	
-41A	5	ST3950117RKL011(a)	. . Cover Assy, Valve	1	
		RD111-6001 0102	. . Screw (AP)	2	
		AN316C4R	. . Nut (AP)	2	
-42	5	RD265-2001-0002	. Plug	1	
-43	5	602146	. HOSE ASSY, Flexible, override shutdown supply (Redundant shutdown valve override hose)	REF	
-43A	5	ST3950117RKL001(a)	. . Cover Assy, Valve	1	
		RD111-6001-0303	. . Screw (AP)	2	
		AN121526	. . Nut (AP)	2	
-44	5	RD265-2001-0003	. . Plug	1	
-45	6	NA5-260083	. HOSE ASSY, Hydraulic return, checkout valve to inlet elbow	REF	
-45	6	NA5-260116	. HOSE ASSY, Hydraulic return, checkout valve to inlet elbow	REF	
-46	7	NA5-260159	. HOSE ASSY, LOX supply, heat exchanger end (Oxidizer supply hose)	REF	
-47	6	RX20673-41	. . Plate Assy	1	
		AN501AD416-10	. . Screw (AP)	4	
		LD163-0010-0010	. . Washer (AP)	4	
-48	7	19-458356	. HOSE ASSY, Oil purge drain	REF	
-49	7	RD265-2001-0005	. . Plug	1	
-50	7	RD265-2001-0003	. . Plug	2	
-51	7	19-459172	. HOSE ASSY, Drain, NO. 1 bearing lubricant seal	REF	
-52	7	RD265-2001-0003	. . Plug	3	
-52B	8	460346	. TUBE ASSY, High pressure, balance cavity (Fuel impeller balance supply tube)	REF	
-52C	8	19-451020	. TUBE ASSY, High pressure, balance cavity (Fuel impeller balance cavity supply tube)	REF	
-52D	8	19-458704	. HOSE ASSY, Balance line, turbopump (Fuel impeller balance cavity supply return hose)	REF	
-53	5	RX20867 (a)	. . Plate Assy	1	
		NAS501-4-20	. . Bolt (AP)	2	
		LD153-0010-0010	. . Washer (AP)	4	
		AN316C4R	. . Nut (AP)	2	
-54	6	RX20867 (a)	. . Plate Assy	1	
		MS35278-215	. . Screw (AP)	2	
		LD153-0010-0014	. . Washer (AP)	4	
		AN316C6R	. . Nut (AP)	2	
-55	8	RX20867 (a)	. . Plate Assy	1	
		NAS501-6-13	. . Bolt (AP)	2	
		LD153-0010-0014	. . Washer (AP)	4	
		AN316C6R	. . Nut (AP)	2	
-56	5	RK395-10031 051 (a)	. . Plate Assy, Round	1	
		NAS501-4-12	. . Bolt (AP)	2	
		LD153-0010-0010	. . Washer (AP)	4	
		AN316C4R	. . Nut (AP)	2	
-57	8	RK395-10031 051 (a)	. . Plate Assy, Round	1	
		MS35278-208	. . Screw (AP)	2	
		LD153-0010-0010	. . Washer (AP)	4	
		AN316C4R	. . Nut (AP)	2	
-58	8	RX20943-11 (a)	. . Plate Assy, Preservation and packaging, combustor	1	
		NAS501-4-12	. . Bolt (AP)	4	
		LD153-0010-0010	. . Washer (AP)	8	
		AN316C4R	. . Nut (AP)	4	
-59	2, 6, 7	RK395-60024	ALTERNATE CLOSURE INSTALLATION (See figure 61 for breakdown)	REF	

(a) See figure 61 for Alternate Closure Installation on line flanges 6 inches or less.

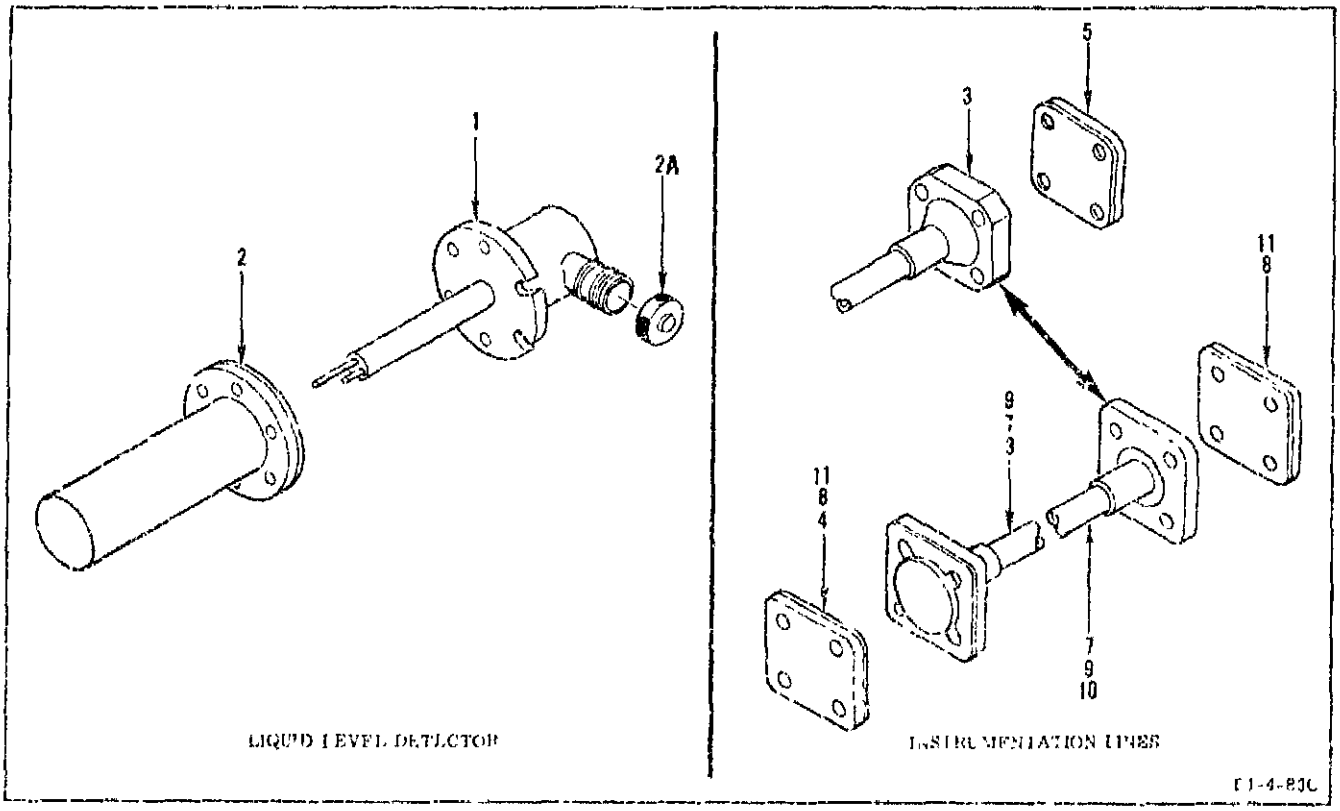

Figure 60. Electrical and Instrumentation Line Closures

FIG & INDEX NO	ZONE NO	PART NUMBER	1 2 3 4 5 6 7 DESCRIPTION	UNITS PER ASSY	USABLE ON CODE
60		RK305-00024	ELECTRICAL AND INSTRUMENTATION LINE CLOSURES (See figure 1 for NEXT)	REF	
		RK305-00038	. PROTECTIVE CLOSURE INST L, Electrical system (Electrical and instrumentation line closures)	1	
- 1		19 702092	. . DETECTOR, Liquid level	REF	
- 2		PK 405 10006-011	. . . Closure Assy, Tubular	1	
		NAS501-4 11	. . . Bolt (AP)	3	
		LD153-0010-0010	. . . Washer (AP)	6	
		AN316C4R	. . . Nut (AP)	3	
- 2A		PD265-6002-3004	. . . Cap	1	
		RK305-00027	. CLOSURE INSTL, Protective, flight instrumentation	1	
- 3		702010	. . TUBE ASSY, Flanged, heat exchanger LOX inlet pressure	REF	
- 4		RX20660-3* (a)	. . . Plate Assy	1	
		NAS501-4-12	. . . Bolt (AP)	2	
		LD153-0010-0010	. . . Washer (AP)	2	
		AN316C4R	. . . Nut (AP)	2	
- 5		RX20660-33 (a)	. . . Plate Assy	1	
		NAS501-4-11	. . . Bolt (AP)	2	
		LD153-0010-0010	. . . Washer (AP)	2	
		AN316C4R	. . . Nut (AP)	2	
- 6		DELETED			
- 7		703015	. . TUBE ASSY, Flanged, LOX pump outlet NO. 2 pressure	REF	
- 8		RX20660-33 (a)	. . . Plate Assy	1	
		NAS501-4-12	. . . Bolt (AP)	2	
		LD153-0010-0010	. . . Washer (AP)	2	
		AN316C4R	. . . Nut (AP)	2	
- 9		70302	. . TUBE ASSY, Flanged, LOX pump outlet, NO. 2 pressure	REF	
- 9		704506	. . TUBE ASSY NO. 2 LOX pump outlet	REF	
-10		703025	. . TUBE ASSY, Flanged, LOX pump outlet, NO. 1 pressure	REF	
-11		RX20660-33 (a)	. . . Plate Assy	1	
		NAS501-4H11A	. . . Bolt (AP)	2	
		LD153-0010-0010	. . . Washer (AP)	2	
		AN316C4R	. . . Nut (AP)	2	

(a) See figure 61 for Alternate Closure Installation on line flanges 6 inches or less.

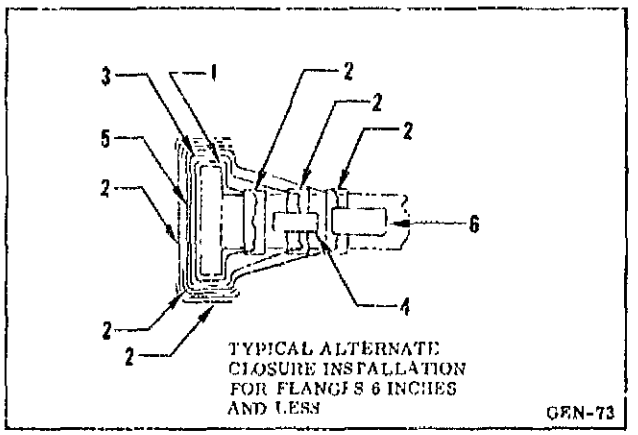

Figure 61. Alternate Closure Installation

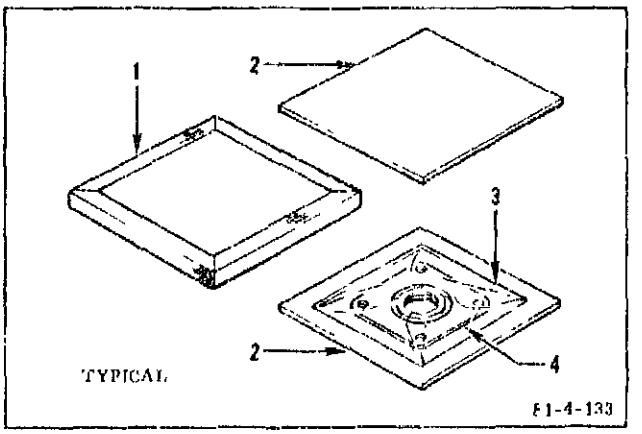

Figure 61A. Seal Plate Closures

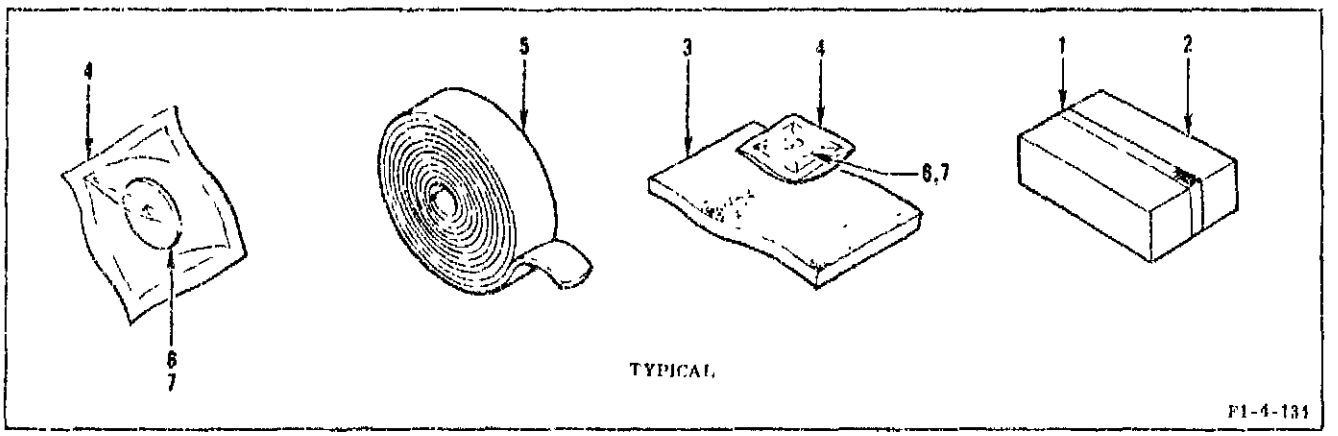

Figure 61B. Prefill Check Valve and Orifice Plate Closures

FIG & INDEX NO	ZONE NO	PART NUMBER	DESCRIPTION 1 2 3 4 5 6 7	UNITS PER ASSY	USABLE ON CODE
61 -		RK395-00024	ALTERNATE CLOSURE INSTALLATION (See figure 1 for REQT)	REF	
- 1		33C	. Aclar Film (0.002 inch minimum thickness) (MFD by 70308)	AR	
- 2		RB0195-002	. Tape	AR	
- 3		Bag	. Polyethylene (First application) (4 Mil. minimum thickness)	1	
- 4		RD170-8007-XXXX	. Plate, Inspection tamper-proof seal instruction (Certificate of Cleanness)	1	
- 5		Bag	. Polyethylene (Second application)(4 Mil. minimum thickness)	1	
- 6		RD170-8006-XXXX	. Plate, tamper-proof seal instruction (Fluid system identification label)	1	
			---*---		
61A-			SEAL PLATE CLOSURES		
- 1		No Number	. Tape, fiberboard sealing (Federal Specification UU-T-111, class II)	AR	
- 2		No Number	. Fiberboard Sheet, corrugated, double faced (275 lb min., Mullen test, Federal Specification PPP-P-201, type II, class I)	2	
- 3		RD393-5006-XXXX	. Bag, polyethylene, 4 Mil. min. thickness, certified "Special Clean"	1	
- 4		No Number	. Seal Plate, varying sizes	1	
			---*---		
61B-			PREFILL CHECK VALVE AND ORIFICE PLATE CLOSURES		
- 1		No Number	. Tape, sealing (Federal Specification PPP-T-60)	AR	
- 2		No Number	. Container, rigid or semi-rigid	1	
- 3		No Number	. Cushion, polyethylene or polyurathane	AR	
- 4		RD393-5006-XXXX	. Bag, polyethylene, 4 Mil. min. thickness, certified "Special Clean"	1	
- 5		RD393-5006-XXXX	. Tubing, polyethylene, 4 Mil. min. thickness, certified "Special Clean" (Alternate to bag closure)	AR	
- 6		No Number	. Orifice Plate, varying sizes	1	
- 7		407825	. Valve Assy, check, inert prefill (Prefill check valve)	REF	

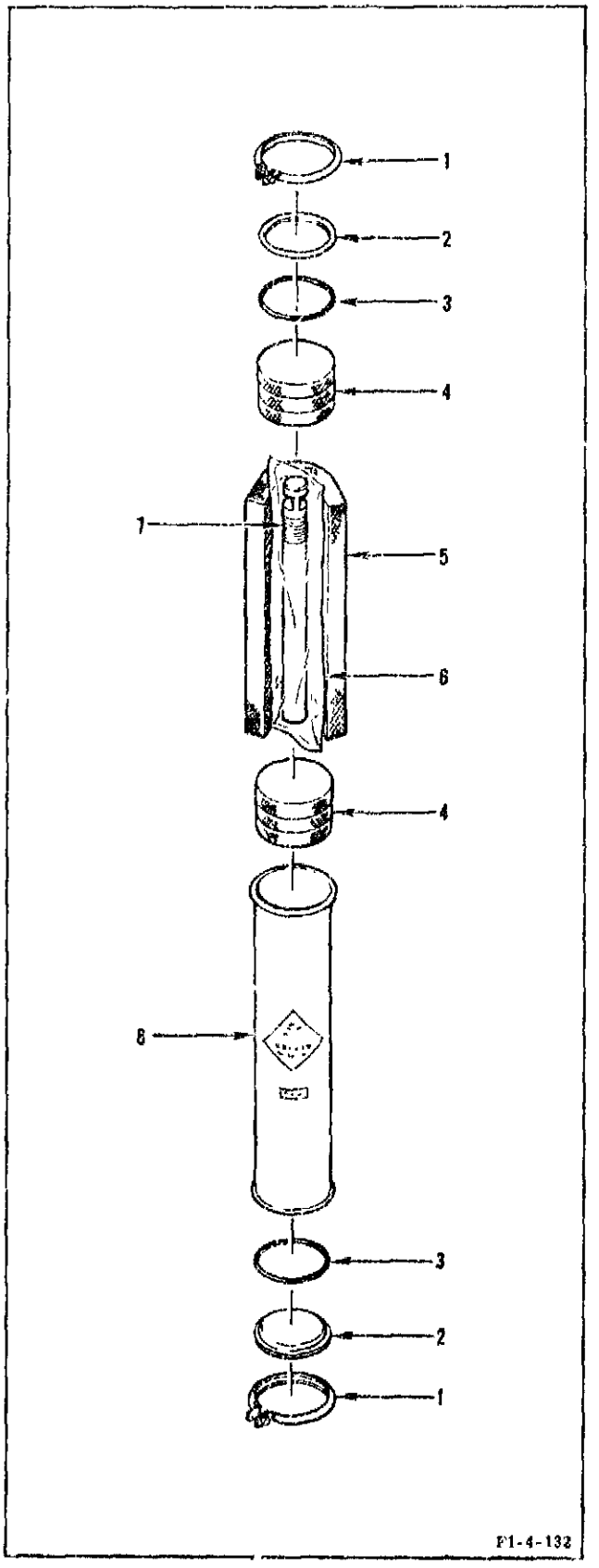

Figure 61C. Hypergol Cartridge Closure

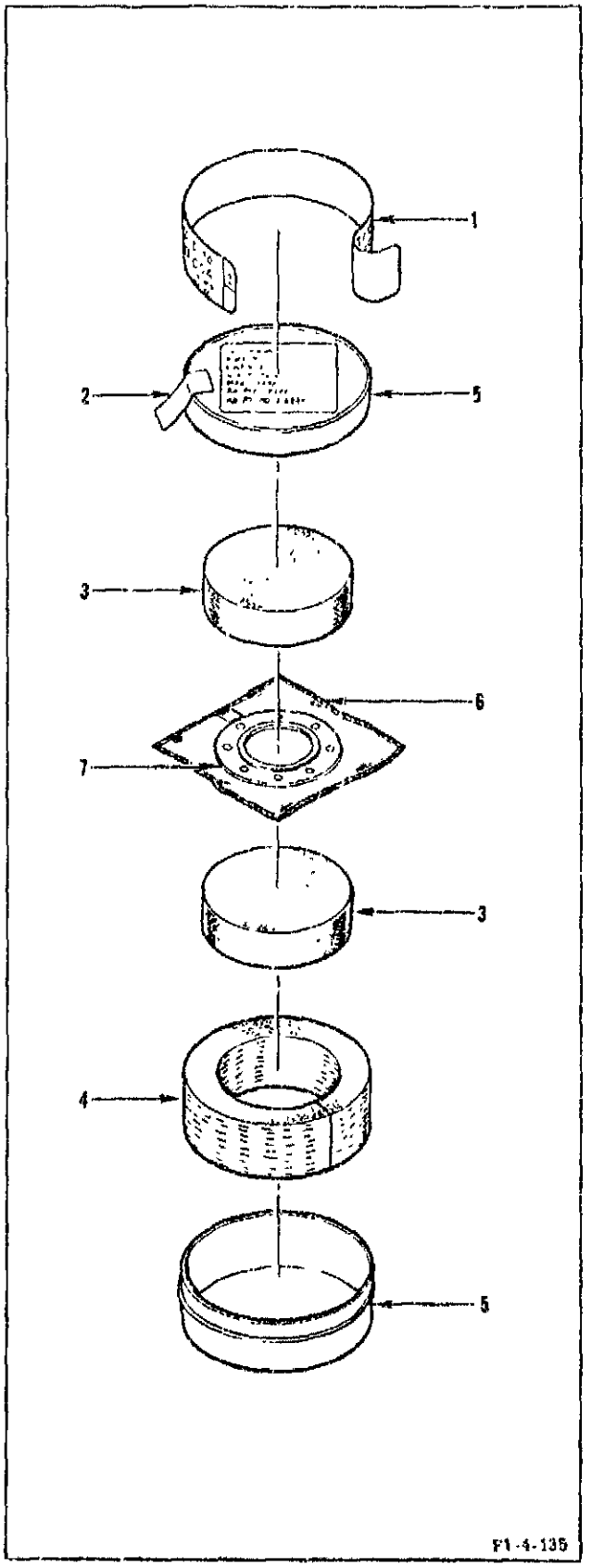

Figure 61D. Pressure-Actuated or Instrumentation Seals Closure

FIG & INDEX NO	ZONE NO	PART NUMBER	DESCRIPTION 1 2 3 4 5 6 7	UNITS PER ASSY				USABLE ON CODE
61C-			HYPERGOL CARTRIDGE CLOSURE					
		RX20509	. CONTAINER ASSY, Packaging, hypergol igniter		1			
-1		MS24347-61	. . Locking		2			
-2		MS24347-41	. . Cover		2			
-3		MS24347-61	. . Gasket		2			
-4		RX20509-3	. . Cushion		2			
-5		RX20509-2	. . Cushion		1			
-6		No Number	. . Bag (Federal Stock NO. 8105-LCO-6811)		2			
-6		No Number	. . Tubing (Federal Stock NO. 8135-782-7460) (Alternate to Federal Stock NO. 8105-LCO-6811)		2			
-7		651329-11	. . Igniter Assy, Hypergol, type K (See figure 39 for REQMT)		REF			
-8		No Number	. . Can (MS24317 type) (Distributed by George B. Woodcock and Co, Los Angeles, Calif.)		1			
			---*---					
61D-			PRESSURE-ACTUATED OR INSTRUMENTATION SEALS CLOSURE					
		RK393-00003	. CONTAINER ASSY, Seals, general purpose (For pressure-actuated or instrumentation seals 2.75 DIA or less)	1				
		RK393-00003-011	. CONTAINER ASSY, Seals, general purpose (For pressure-actuated or instrumentation seals 2.75 DIA to 5.75 DIA)		1			
		RK393-00003-021	. CONTAINER ASSY, Seals, general purpose (For pressure-actuated or instrumentation seals 5.75 DIA to 9.00 DIA)			1		
		RK393-00003-031	. CONTAINER ASSY, Seals, general purpose (For pressure-actuated or instrumentation seals 9.00 DIA to 12.50 DIA)				1	
-1		RD171-0002-0001	. . Label, Tamper-proof	1	2	2	2	
-2		No Number	. . Tape, Pressure sensitive (RB3195-002 (Rocketdyne) or (Federal Specification PPP-T-60)			2	4	
-3		RK393-00003-002	. . Cushion	2				
-3		RK393-00003-003	. . Cushion		2			
-3		RK393-00003-004	. . Cushion			2		
-3		RK393-00003-005	. . Cushion				2	
-4		RK393-00003-006	. . Cushion	1				
-4		RK393-00003-007	. . Cushion		1			
-4		RK393-00003-008	. . Cushion			1		
-4		RK393-00003-009	. . Cushion				1	
-5		No Number	. . Can and Lid, 4 IN. OD by 1-1/8 IN. D (MFD by 73708)	1				
-5		No Number	. . Can and Lid, 7-1/8 IN. OD by 1-1/8 IN. D (MFD by 73708)		1			
-5		No Number	. . Can and Lid, 10-5/8 IN. OD by 1-7/16 IN. D (MFD by 73708)			1		
-5		No Number	. . Can and Lid, 14-1/2 IN. OD by 1-5/8 IN. D (MFD by 73708)				1	
-6		No Number	. . Bag, Cleanness integrity barrier (4 mil. max.-min. MIL-B-121, grade A, type II, class 1)	1	1	1	1	
-7		No Number	. . Seal, Pressure-actuated or instrumentation, varying sizes	1	1	1	1	

Electrical Connector Gaskets and Dust Caps

REFFERENCE DESIGNATION		PART NUMBER	NEXT HIGHER ASSEMBLY	FIGURE & INDEX NO.	PLUG COUPLING NUT GASKET		CLOSURES	
							PLUG	RECEPTACLE
PLUG	RECEP-TACLE				RD262-3002	RD261-2006	RD265-6010	RD265-6002
Interface	J18	703937-111	502944	31-44				-3012
Interface	J19	703937-51	502948-11	31-63				-3002
Interface	J20	703937-91	502944	31-45				-3010
P30		502935-171	502944	31-38		-0016	-3005	
	J30	308399	308400	21-3				-3005
P43 NO. 1		NA5-27556TS142S	502932	39-4A		-0014	-3004	
	J43 NO. 1	651990-11	651576	39-5				-3004
P44 NO. 2		NA5-27556TS142S	502932	39-4B		-0014	-3004	
	J44 NO. 2	651990-11	651576	39-5A				-3004
P45 NO. 1		NA5-27556TS142S	502932	39-4C		-0014	-3004	
	J45 NO. 1	651990-11	651576	39-52				-3004
P46 NO. 2		NA5-27556TS142S	502932	39-4D		-0014	-3004	
	J46 NO. 2	651990-11	651576	39-52A				-3004
P47		NA5-27556T2214P	502932	39-4E		-0022	-3008	
	J47	502938-341	502942	31-145				-3008
P50		502937-91	502943-11	31-81		-0014	-3004	
	J50	558066	558350	24-3				-3004
P51 Start		502937-71	502944	31-40		-0012	-3003	
	J51 Start	556511	556986	26-5				-3003
P52 Stop		502937-41	502944	31-41		-0010	-3002	
	J52 Stop	556508	556986	26-4				-3002
P53		502937-91	704531	33-1C		-0014	-3004	
			704531	34-443		-0014	-3004	
	J53	NA5-27443	309110	29-6				-3004
			306866	29-6				-3004
P56		502937-91	502948-11	31-82		-0014	-3004	
	J56	NA5-27305	407791	22-14				-3004
P70 NO. 1 SIDE		502935-171	704531	33-1A		-0016	-3005	
			704531	34-444		-0016	-3005	
J70 NO. 1 SIDE		RD414-1012-0020	408059	15-33				-3005
P71 NO. 2 SIDE		502935-171	704532	33-2A		-0016	-3005	
			704532	34-490		-0016	-3005	
J71 NO. 2 SIDE		RD414-1012-0020	408059	15-33				-3005
P73 NO. 2		502937-91	502949	31-120		-0014	-3004	
	J73 NO. 2	308391	502001	31-126				-3004
P74 NO. 3		502937-91	502947	31-97		-0014	-3004	
	J74 NO. 3	308391	502001	31-103				-3004
P75		502935-111	502944	31-42		-0014	-3004	
	J75	502938-111	502941	13-2A				-3004
P76 NO. 1 SIDE		502937-171	704531	33-1B		-0016	-3005	
			704531	34-445				
J76 NO. 1 SIDE		NA5-27286T19	408063-11	19-38F				-3005
P77 NO. 2 SIDE		502935-171	704532	33-2D		-0016	-3005	
			704532	34-491		-0016	-3005	
J77 NO. 2 SIDE		NA5-27286T19	408063-11	19-38F				3005
P78 NO. 1		502935-91	502944	31-39		-0014	-3004	
	J78 NO. 1	308391	502001	31-50				-3004
P85 NO. 1		502935-31	502943	31-171		-0010	-3002	
	J85 NO. 1	NA5-27185T17	459175	13-18				-3002
P86 NO. 1		502935-31	502943	31-172		-0010	-3002	
	J86 NO. 1	NA5-27185T17	459175	13-20				-3002
P87 NO. 2		502935-11	502943	31-173		-0008	-3001	
	J87 NO. 2	NA5-27185T15	459175	13-14				-3001
P88 NO. 2		502935-11	502943	31-174		-0008	-3001	
	J88 NO. 2	NA5-27185T15	459175	13-16				-3001
Interface	J100	703937-21	704538	33-6B				-3007
Interface	J101	703937-101	704529	33-8B				-3010
			704529	34-12				-3010
Interface	J102	703937-71	704530	33-9B				-3008
			704530	34-21				-3008
Interface	J103	703937-61	704527	33-7B				-3008
			704527	34-29				-3008
Interface	J104	703937-31	704533	33-5C				-3007
			704533	34-59				-3007

Figure 62. Coupling Nut Gaskets and Closures for Electrical Plugs and Receptacles (Sheet 1 of 4)

REFERENCE DESIGNATION		PART NUMBER	NEXT HIGHER ASSEMBLY	FIGURE & INDEX NO.	PLUG COUPLING NUT GASKET		CLOSURES	
							PLUG	RECEPTACLE
PLUG	RECEPTACLE				RD262-3002	RD261-2006	RD265-6010	RD265-8002
Interface								
	J106	703937 41	704534-11	33-14G				-3007
			704534-11	34-28				-3007
P108		502935-211	704538	33-6A		-0018	-3006	
			704538	34-2		-0018	-3006	
	J108	702810-21	702561	33-52				-3006
			702561	34-30				-3006
			702561	34-496				-3006
P109		502937 611	704529	33-PA		-0028	-3010	
			704529	34-10		-0028	-3010	
	J109	702810-21	702561	33-52				-3010
			702561	34-30				-3010
P110		502935-351	704530	33-9A		-0022	-3008	
			704530	34-19		-0022	-3008	
	J110	702810-21	702561	33-52				-3008
			702561	34-30				-3008
			702561	34-496				-3008
P111		502935-461	704528	33-4F		-0028	-3010	
			704528	34-182		-0028	-3010	
	J111	702810-21	702561	33-52				-3010
			702561	34-30				-3010
			702561	34-496				-3010
P112		502935-421	704526	33-3D		-0024	-3009	
			704526	34-326		-0024	-3009	
	J112	702810-21	702561	33-3D				-3009
			702561	34-30				-3009
			702561	34-496				-3009
P113		502935-341	704531	33-1D		-0022	-3008	
			704531	34-442		-0022	-3008	
	J113	702810-21	702561	33-52				-3008
			702561	34-30				-3008
			702561	34-496				-3008
P114		502935-301	704532	33-2C		-0020	-3007	
			704532	34-489		-0020	-3007	
	J114	702810-21	702561	33-52				-3007
			702561	34-30				-3007
			702561	34-496				-3007
P115		502935-341	704527	33-7A		-0022	-3008	
			704527	34-27		-0022	-3008	
	J115	702810-21	702561	33-52				-3008
			702561	34-30				-3008
			702561	34-496				-3008
P116 NO. 1		704476	704528	33-4B		-0014	-3004	
			704528	34-183		-0014	-3004	
	J116 NO. 1	NA5-27440T2	702561	33-41				-3004
			702561	34-201				-3004
		NA5-27412T2	702561	34-291				-3004
P117 NO. 2		704476-21	704528	33-4E		-0014	-3004	
			704528	34-184		-0014	-3004	
	J117 NO. 2	NA5-27440T20	702561	34-224				-3004
P118		704476	704528	33-4C		-0014	-3004	
			704528	34-185		-0014	-3004	
	J118	NA5-27440T10	702561	33-64				-3004
			702561	34-248				-3004
P119		502937-601	704528	33-4A		-0014	-3004	
			704528	34-186		-0014	-3004	
	J119	NA5-27440T15P	702561	33-40				-3004
			702561	34-259				-3004
P120 NO. 2		704476	704528	33-3A		-0014	-3004	
			704528	34-327		-0014	-3004	
	J120 NO. 2	NA5-27440T25	702561	33-28				-3004
		NA5-27412T25	702561	34-342				-3004
		NA5-27440T25	702561	34-342				-3004
P121 NO. 2		704476	704526	33-3B		-0014	-3004	
			704526	34-328		-0014	-3004	
	J121 NO. 2	NA5-27440T1P	702561	33-82				-3004
		NA5-27440T1P	702561	34-366				-3004
P122		704476	704526	33-3C		-0014	-3004	
			704526	34-329		-0014	-3004	
	J122	NA5-27440T5	702561	33-37				-3004
		NA5-27440T5	702561	34-393				-3004
P123		704476	704528	33-4D		-0014	-3004	
			704528	34-187		-0014	-3004	

Figure 62. Coupling Nut Gaskets and Closures for Electrical Plugs and Receptacles (Sheet 2 of 4)

REFERENCE DESIGNATION		PART NUMBER	NEXT HIGHER ASSEMBLY	FIGURE & INDEX NO.	PLUG COUPLING NUT GASKET		CLOSURES	
							PLUG	RECEPTACLE
PLUG	RECEPTACLE				RD262-3002	RD261-2006	RD265-6010	RD765-6002
	J123	NA5-27440T15P	702561	34-274				-3004
P128		502935-41	502944	31-43		-0010	-3002	
	J128	502936-41	704532	33-2D				-3002
			704532	34-492				-3002
P130		502935-131	704533	33-5B		-0014	-3004	
			704533	34-58		-0014	-3004	
	J130	502938-131	704542	13-30				-3004
P132 NO. 1		502935-91	704533	33-5A		-0014	3004	
			704533	34-57		-0014	-3004	
	J132 NO. 1	NA5-27299T2	308211	2-46				-3004
P134 NO. 1		502935-41	704534-11	33-14C		-1010(a)	-3002	
			704534-11	34-125		-1010(a)	-3002	
	J134 NO. 1	NA5-27333T7	458800	13-38				-3002
P137		502937-631	704534-11	33-14F		-1010(a)	-3002	
			704534-11	34-126		-1010(a)	-3002	
	J137	NA5-27414T2	702561	33-60				-3002
			702561	34-82				-3002
P138		502937-631	704534-11	33-14A		-1010(a)	-3002	
			704534-11	34-127		-1010(a)	-3002	
	J138	NA5-27215T6	702561	33-114B				-3002
			702561	34-87				-3002
Interface	J140	703937	704540	33-11B				-3005
Interface	J141	703937-121	704541	33-12B				-3012
Interface	J142	703937-141	502949	31-121				-3004
Interface	J143	703937-81	704536	33-10E				-3009
P146		502937-341	704535	33-13D		-0022	-3008	
	J146	702820-31	702561	33-62				-3008
P147		502935-211	704540	33-11A		-0018	-3006	
	J147	702820-31	702561	33-62				-3006
P148		502937-621	704541	33-12A		-0036	-3012	
	J148	702820-31	702561	33-62				-3012
P151		502935-561	704537	33-15F		-0036	-3012	
	J151	702820-31	702561	33-62				-3012
P152		502935-341	704539	33-16C		-0022	-3008	
	J152	702820-31	702561	33-62				-3008
P155 NO. 1		502937-601	704535	33-13A		-0014	-3004	
	J155 NO. 1	NA5-27440T25	702561	33-109				-3004
P158		704476	704539	33-16B		-0014	-3004	
	J158	NA5-27440T25	702561	33-25A				-3004
P159 NO. 1		704476-21	704535	33-13B		-0014	-3004	
	J159 NO. 1	NA5-27440T20	702561	33-67				-3004
P160		704476	704539	33-16A		-0014	-3004	
	J160	NA5-27440T25	702561	33-25				-3004
P162		704476	704535	33-13C		-0014	-3004	
	J162	NA5-27412T05	702561	33-54				-3004
P163		704476	704537	33-15A		-0014	-3004	
	J163	NA5-27412T5	702561	33-78				-3004
P164		704476	704537	33-15B		-0014	-3004	
	J164	NA5-27412T5	702561	33-80				-3004
P165		704476	704537	33-15C		-0014	-3004	
	J165	NA5-27440T20	702561	33-74				-3004
P166		704476	704537	33-15D		-0014	-3004	
	J166	NA5-27440T20P	702561	33-76				-3004
Interface (Spare)	J167	502938-281	704537	33-15F				-3007
Interface	J174	703937-131	502947	31-98				-3004
P175		502935-91	502941	13-3		-0014	-3004	
	J175	NA5-27311	458800	13-6				-3004
P184 NO. 2		502937-41	704538	33-10D		-0010	-3002	
	J184 NO. 2	NA5-27215T3	702561	33-57				-3002
P185		502935-41	704536	33-10C		-0010	-3002	
	J185	NA5-27215T3	702561	33-19				-3002

(a) For use with high-temperature stainless steel plugs with ceramic inserts.

Figure 62. Coupling Nut Gaskets and Closures for Electrical Plugs and Receptacles (Sheet 3 of 4)

REFERENCE DESIGNATION		PART NUMBER	NEXT HIGHER ASSEMBLY	FIGURE & INDEX NO.	PLUG COUPLING NUT GASKET		CLOSURES	
PLUG	RECEPTACLE						PLUG	RECEPTACLE
					RD262-3002	RD261-2006	RD265-6010	RD265-6002
P186		502935-41	704536	33-10B		-0010	-3002	
	J186	NAS-27215T6	702561	33-22				-3002
P187		502935-41	704536	33-10A		-0010	-3002	
	J187	NAS-27215T6	702561	33-21				-3002
Interface (Spare)								
	J188	502936-161	704536	33-10F				-3005
P230 NO. 1		502937-91	704542	13-31		-0014	-3004	
	Interface							
P450		RD414-1009-0002	502932	39-4	-0008		-3001	
	J450	RD414-1011-0002	502932	39-4				-3001
Interface								
	J470	703937-91	502942	31-150				-3010
Interface								
	J600	703937-11	502942	31-175				-3008

Figure 63 deleted.

Figure 62. Coupling Nut Gaskets and Closures for Electrical Plugs and Receptacles (Sheet 4 of 4)

SECTION III

NUMERICAL INDEX

PART NUMBER	REPAIR CODE	FIG. & INDEX NO	ZONE NO	QTY
AG31635	D3	29-29		2
AG31635	D3	29-40		1
AG31635	D3	29-85		1
AN10-26	F3	49-		17
AN10-26A	F3	44-51A		2
AN101019	F3	13-		1
AN101109	F3	13-		4
AN101114	F3	12-12A		4
AN101124	F3	13-		6
AN103817	F3	23-		12
AN104706	F3	13-		2
AN104707	F3	13-80		4
AN104708	F3	2-		2
AN104717	F3	10-		18
AN121526	F3	44-		26
AN3-3	F3	42-		42
AN3H3A	F3	36-		12
AN3H5A	F3	14-10		12
AN315D3R	F3	48-		2
AN316-10R	F3	49-		22
AN316-4R	F3	49-		4
AN316C10R	F3	20-		32
AN316C3R	F3	53-		5
AN316C4R	F3	40-		365
AN316C5R	F3	42-		115
AN316C6R	F3	55-		28
AN316C7R	F3	45-		17
AN316C8R	F3	45-		8
AN320C4	F3	11-		6
AN4-13A	F3	13-		3
AN4-5A	F3	7-		8
AN4-7A	F3	40-		16
AN4H6A	F3	14-1		12
AN5-24A	F3	44-51B		4
AN500AD6-5	F3	46-		2
AN500AD6-7	F3	15-42		2
AN500D4-7	F3	15-30		4
AN500D6-7	F3	15-42		2
AN501-10-26	F3	48-		5
AN501-10-7	F3	11-		1
DELETED				
DELETED				
AN501AD10-8	F3	46-		8
AN501AD416-10	F3	6-		35
AN501AD416-28	F3	46-		6
AN501AD416-7	F3	54-		20
AN501AD416-8	F3	45-		42
AN501AD516-10	F3	49-		4
AN501AD516-6	F3	46-		4
AN501AD616-10	F3	46-		26
DELETED				
DELETED				
AN501A10-7	F3	12-		1
AN501A416-8	F3	42-		24
AN501A616-8	F3	49-		4
AN501D10-7	F3	13-		1
AN515C4-10	F3	13-		4
AN515C4-7	F3	13-		4
AN515C4-8	F3	13-		4
AN515C4R7	F3	34-		4
AN515C4R8	F3	31-148		4
AN515C6-8	F3	56-		2
AN520C10R10	F3	6-		78
AN520C10R11	F3	6-		1
AN520C10R12	F3	5-		45
AN520C10R14	F3	5-		25
AN520C10R16	F3	5-		24
AN520C10R17	F3	6-		1
AN520C10R18	F3	6-		7
AN520C10R20	F3	5-		5
AN520C10R22	F3	31-24		5
AN520C10R24	F3	5-		5
AN520C10R26	F3	20-		8
AN520C10R28	F3	5-		4
AN520C10R30	F3	31-165		4
AN520C10R6	F3	33-		1
AN520C10R7	F3	13-		1
AN520C10R8	F3	5-		44
AN525D10-14	F3	48-		2
DELETED				
AN535-4-4	F3	22-		1
AN565DC6H4	F3	15-35		1
AN622TB15	F3	5-		1
AN6230-6	F3	40-10		1
AN7-16A	F3	40-		2
AN7-21A	F3	40-		2
AN7-23A	F3	40-		1
AN804-4J	F3	39-		2
AN814-12JL	F3	6-		3
AN814-12SL	F3	9-6		2
AN814-2J	F3	15-111		1
AN814-2S	F3	5-		2
AN814-2SL	F3	9-4		9
AN814-2JL	F3	2-42		9
AN814-4J	F3	15-53		2
AN814-4JL	F3	2-		71
AN814-4S	F3	5-		3
AN814-4SL	F3	5-		17
AN814-6J	F3	19-1A		1
AN814-8JL	F3	9-6A		2
AN814-8SL	F3	9-6A		2
AN815-4J	F3	5-		4
AN815-4S	F3	5-		5
AN815-6J	F3	6-		3
AN815-6S	F3	6-		1
AN815-8J	F3	39-25		1
AN818-10J	F3	6-		2
AN818-12J	F3	6-		2
AN818-16J	F3	6-		2
AN818-20J	F3	5-		2
AN818-4J	F3	5-		26
AN818-6J	F3	5-		16
AN818-8J	F3	5-		25
AN824-4J	F3	38-		1
AN824-6J	F3	13-		1
AN824-8S	F3	5-		1
AN833-4J	F3	36-42		13
AN833-4S	F3	6-		1
AN833-6S	F3	6-		1
AN833-8S	F3	6-		2
AN833-8J	F3	13-		1
AN837-4J	F3	37-39		2
AN837-6J	F3	13-		2
AN837-8J	F3	6-		1
AN837-8S	F3	6-		1
AN894C4-2	F3	27-		2
AN901-8C	F3	28-34		2
AN919-12J	F3	20-		2
AN919-12S	F3	5-150		1
AN919-18J	F3	6-		1
AN919-19J	F3	6-		4
AN919-6S	F3	5-		1
AN924-12S	F3	6-		1
AN924-5	F3	50-		1
AN924-8J	F3	13-		1
AN924-6S	F3	5-		1

PART NUMBER	REPAIR CODE	FIG & INDEX NO	ZONE NO	QTY
AN924-8	F3	50-41		1
AN924-8J	F3	13-		1
AN929-4C	F3	38-79A		1
AN961-6	F3	15-39		1
AS30	F3	7-		4
AS30	F3	20-		8
AS30	F3	33-		72
AS30	F3	34-7		1
AS30	F3	34-203		4
AS30	F3	34-207		4
AS30	F3	34-226		4
AS30	F3	34-248		4
AS30	F3	34-261		4
AS30	F3	34-276		4
AS30	F3	34-345		4
AS30	F3	34-368		8
AS30	F3	34-395		4
BAG	F3	61-3		1
BAG	F3	61-5		1
BALL	F2	29-28		1
BN359-1032-3	F3	7-41		158
BN359-1032-3	F3	39-66C		13
BN360-524-6	F3	7-42		54
BN372-438-2	F3	33-118A		4
BN523-1032-1	F3	39-64A		72
BN523-1032-2	F3	39-64A		72
CGS13-11-738	D3	11-17		1
CGS13-15-238	D3	11-16		1
DT35233-81	F3	44-51G		2
FA30827	D3	29-26		1
FA30965	D3	29-45		1
GA5833	F3	20-173		1
GA7025C464	F3	5-92		1
GA7025C464	F3	27-26		1
GA7025C486	F3	5-93		1
GA7026	F3	5-104		1
GA7090	F3	27-119		1
GA7091	F3	27-118		1
G4048	F3	40-21		1
G4048	F3	44-20		1
G4048	F3	44-36		1
G4088	F3	40-3		1
G4088	F3	45-8D		1
G4089	F3	40-20		1
G4089	F3	44-17A		1
G4089	F3	44-33A		1
HOUSING	F3	29-39		1
HOUSING	F3	29-84		1
HL194W8	F3	7-21		17
HL194W8	F3	7-26		2
HL194W8	F3	7-30		24
HL194W8	F3	7-32		44
HL30-8-17	F3	7-25		2
HL30-8-17	F3	7-29		24
HL30-8-17	F3	7-31		44
HL30-8-6	F3	7-37		238
HL30-8-9	F3	7-20		16
HL54-8-5	F3	7-35		83
HL61-8-6	F3	7-33		14
HL61-8-6	F3	7-39		202
HL72-8	F3	7-34		14
HL72-8	F3	7-36		85
HL72-8	F3	7-38		239
HL72-8	F3	7-40		202
HSBY20-101	F3	9-34		1
H19083-4	F3	2-		180
H19083-4	F3	33-		4
H19083-4	F3	34-117		4
H19083-4	F3	39-		240
INSERT	F3	29-34A		AR

PART NUMBER	REPAIR CODE	FIG & INDEX NO	ZONE NO	QTY
JD30828	D3	29-27		2
JD30966	D3	29-46		2
KNHL1032	F3	15-100A		24
KNHL428T5P	D3	23-32B		12
KNHL524T13SP	F3	27-81		1
KNHL624	F3	15-113B		4
KNHL624	F3	19-42B		2
KNHL624SP	F3	19-42A		4
KNHS428TSP14DSP	F3	23-32C		4
KNHS524T19	F3	28-27		16
KNH1018T20SP	F3	15-113D		48
KNH1018T20SP	F3	19-42C		40
KNH1032TSP	F3	22-51A		12
KNH428	F3	33-45A		2
KNH428	F3	33-108A		2
KNH428SP	F3	23-2A		4
KNH428TSP	F3	22-35A		4
KNH428TSP	F3	22-51B		8
KNH524-9SP	F3	5-142G		40
KNH524-9SP	F3	6-120E		40
KNH524SP	F3	6-120F		8
KNH524TSP	F3	2-54A		8
KNH524TSP	F3	22-51D		3
KNH524T13SP	F3	6-116B		8
KNH624MX10	F3	28-31		24
KNH624TSP	F3	2-54B		8
KNH624TSP	F3	6-110J		2
KNH624TSP	F3	6-116J		8
KNH624T6SP	F3	5-122J		2
KNH720-16SP	F3	5-142D		4
KNH720-16SP	F3	6-120D		4
KNH720T13SP	F3	5-142C		13
KNH720T13SP	F3	6-120C		13
KNH720T14SP	F3	10-13C		36
KNH720T14SP	F3	10-32		36
KNL1032TSP	F3	7-80		16
KNL428-4	F3	37-36A		4
KNL428SP	F3	19-13A		12
KNL428SP	F3	19-42D		4
KNL428SP	F3	20-		14
KNL428SP	F3	20-63A		2
KNL428TSP	F3	19-42E		6
KNL428TSP	F3	7-79		30
KNL428T5SP	F3	33-43A		4
KNL428T5SP	F3	34-208		4
KNL624TSP	F3	22-51F		1
KNY10050-2TSP	F3	10-13A		1
KN1032SP	F3	14-29B		14
KN428-4	D3	37-26A		4
KN428-4SP	F3	5-142F		6
KN428-4SP	F3	6-120G		2
KN428SP	F3	5-142E		6
KN428SP	F3	6-120H		10
KN428SP	F3	14-3A		4
KN428SP	F3	14-11A		4
KN428SP	F3	14-29A		14
KN428SP	F3	20-54A		4
KN428SP	F3	20-69A		4
KN428SP	F3	39-50D		1
KN428TSP	D3	5-134Q		16
KN428TSP	D3	6-110G		4
KN428TSP	D3	6-116G		16
KN428TSP	D3	22-51C		4
KN428T4SP	F3	20-104A		2
KN428T6SP	F3	38-26		6
KN524SP	F3	39-50F		3
KN524TSP	F3	22-51E		5
KN624SP	F3	5-142B		3
KN624SP	F3	6-120B		3
KN624TSP	F3	5-134C		2
KN624TSP	F3	6-116H		2
K2207-14	F3	2-11		2
K2207-14	F3	2-37		2

PART NUMBER	REPAIR CODE	FIG & INDEX NO	ZONE NO	QTY
K2207-14	F3	20-146		2
K2207-16	F3	2-3		2
K2207-16	F3	2-8		2
K2207-18	F3	2-2		4
K2207-18	F3	2-7		4
K2207-24	F3	20-97		2
K2207-32	F3	20-135		1
K2207-32	F3	20-143		3
K2207-32	F3	20-148		1
K2207-32	F3	20-153		1
K2207-34	F3	20-131		2
K2207-34	F3	20-151		2
K2297-2	F3	39-		2
K2297-4	F3	39-		2
K2297-6	F3	39-		2
LABEL	F3	61-4		1
LABEL	F3	61-6		1
LD152-0010-0250	F3	38-151		1
LD152-0010-0400	F3	31-196		1
LD153-0010-0001	F3	34-		4
LD153-0010-0002	F3	15-31		11
LD153-0010-0003	F3	15-43		2
LD153-0010-0004	F3	29-4		8
LD153-0010-0005	F3	29-73		2
LD153-0010-0007	F3	5-		204
LD153-0010-0008	F3	13-		233
LD153-0010-0009	F3	11-		100
LD153-0010-0010	F3	2-		1068
LD153-0010-0011	F3	28-		16
LD153-0010-0012	F3	2-		292
LD153-0010-0013	F3	6-		11
LD153-0010-0014	F3	7-		108
LD153-0010-0015	F3	27-		4
LD153-0010-0016	F3	40-		51
LD153-0010-0018	F3	45-		32
LD153-0010-0020	F3	44-		32
LD153-0010-0022	F3	44-		91
LD153-0010-0024	F3	19-13		77
LD153-0010-0026	F3	44-		4
LD153-0011-0006	F3	13-		12
LD153-0011-0011	F3	11-		21
LD153-0011-0012	F3	48-		4
LD153-0011-0013	F3	13-		16
LD153-0011-0014	F3	13-		30
LD153-0011-0015	F3	26-34		4
LD153-0013-0001	F3	20-		46
LD153-0013-0002	F3	2-		564
LD153-0013-0003	F3	2-		64
LD153-0013-0004	F3	15-2		65
LD153-0013-0005	F3	40-		4
LD153-0013-0006	F3	47-		24
LD153-0013-0007	F3	15-78		24
LD153-0013-0008	F3	46-		12
LD153-0013-0009	F3	15-94		1
DELETED				
LD153-0014-0014	F3	49-		24
LD153-0014-0016	F3	49-		4
LD153-0014-0018	F3	49-		4
LD153-0014-0026	F3	49-		44
LINE	D3	13-13		1
LINE	D3	13-15		1
LINE	D3	13-17		1
LINE	D3	13-19		1
MDC60461-487	F3	11-38		6
MDC60461-718	F3	11-37		6
MBS60407-250-01	F3	6-6		2
MBS60407-575-01	F3	33-116		1
MC124C4W	F3	36-		12
MC124C4W	F3	37-		20
MC124C4W	F3	38-		38
MC221C4W	F3	6-185		1
MS124695	F3	26-		6
MS124696	F3	16-		47
MS124307	F3	26-		4

PART NUMBER	REPAIR CODE	FIG & INDEX NO	ZONE NO	QTY
MS124698	F3	25-		16
MS124700	F3	25-		3
MS15795-310	F3	20-		10
MS15795-311	F3	2-		10
MS15795-312	F3	20-		8
MS15795-810	F3	11-		12
MS15795-812	F3	37-		10
MS15795-822	F3	13-		1
MS171433	F3	14-		1
MS171437	F3	19-38C		1
MS171464	F3	23-		1
MS171492	F3	25-		2
MS171496	F3	26-		2
MS171527	F3	21-		1
MS171536	F3	29-61		1
MS171596	F3	29-61A		1
MS171648	F3	25-		2
MS20002C12	F3	9-		64
MS20002C4	F3	13-		4
MS20004H10	F3	13-		8
MS20004H8	F3	25-		8
MS20006-12	F3	13-		2
MS20006-6	F3	13-		2
MS20006-76	F3	13-		12
MS20006H12	F3	25-		8
MS20006H41	F3	25-		3
MS20006H49	F3	25-		2
MS20007H22	F3	40-		4
MS20253-4-297	F3	15-6		1
MS20500-1216	F3	6-		2
MS20500-428	F3	11-		63
MS20819-10J	F3	6-		2
MS20819-12J	F3	6-		2
MS20819-16J	F3	6-		2
MS20819-20J	F3	5-		2
MS20819-4J	F3	5-		96
MS20819-6J	F3	5-		20
MS20819-8J	F3	5-		27
MS21083C10	F3	15-18		1
MS21209F1415	F3	9-		8
MS21209C0415	F3	15-40B		4
MS21209C0615	F3	15-40A		1
MS21209C0620	F3	29-10C		4
MS21279-13	F3	34-167		8
MS21318-18	F3	15-		4
MS21318-7	F3	20-		4
MS21919WH10	F3	36-14		1
MS24347	F3	61C-8		1
MS24347-41	F3	61C-2		2
MS24347-61	F3	61C-1		2
MS24347-81	F3	61C-3		2
MS25043-14	F3	13-		1
MS28774-006	F3	22-41		4
MS28774-008	F3	26A-2		2
MS28774-012	F3	22-22		6
MS28774-014	F3	26-9		4
MS28774-015	F3	14-20		4
MS28774-016	F3	20-		22
MS28774-018	F3	5-		33
MS28774-022	F3	26-7		8
MS28774-023	F3	13-		4
MS28774-025	F3	23-		6
MS28774-118	F3	21-11		2
MS28774-121	F3	5-		4
MS28774-128	F3	14-6		10
MS28774-129	F3	26-30		12
MS28774-137	F3	25-		4
MS28774-138	F3	25-		4
MS28774-146	F3	22-		2
MS28774-210	F3	5-		2
MS28774-222	F3	26-37		4
MS28774-226	F3	28-9		1
MS28774-227	F3	28-5		2
MS28774-234	F3	21-20		4
MS28774-237	F3	21-18		4
MS28774-246	F3	29-2		2
MS28775-013	F3	29-11B		10
MS28775-124	F3	29-83		1
MS28778-16	F3	14-14		2
MS28877-4	F3	14-26		2
MS28778-6	F3	13-		3
MS28782-13	F3	19-33		2
MS28782-17	F3	29-70		1
MS28782-20	F3	19-28		2
MS28782-21	F3	15-23		6
MS28782-23	F3	22-		6
MS28782-34	F3	19-31		2
MS28782-40	F3	15-5		2
MS28782-45	F3	15-21		2
MS28782-46	F3	15-11		2
MS28782-50	F3	19-16		2
MS28782-8	F3	15-13		2
MS28783-6	F3	39-58		1
MS29512-02	F3	5-		4
MS29512-03	F3	13-		2
MS29512-04	F3	5-		22
MS29512-08	F3	30-172		1
MS29512-32	F3	22-		1
MS29513-006	F3	26-		1
MS29513-008	F3	14-28		4
MS29513-010	F3	20-		1
MS29513-012	F3	26-18		2
MS29513-013	F3	13-		1
MS29513-014	F3	26-8		2
MS29513-015	F3	13-		4
MS29513-016	F3	23-		9
MS29513-017	F3	14-16		2
MS29513-018	F3	15-8D		7
MS29513-022	F3	26-6		4
MS29513-023	F3	24-		1
MS29513-024	F3	14-15		3
MS29513-025	F3	23-		3
MS29513-110	F3	15-12		1
MS29513-111	F3	15-52		1
MS29513-114	F3	29-7		1
MS29513-115	F3	19-32		1
MS29513-121	F3	13-		2
MS29513-123	F3	25-		2
MS29513-125	F3	22-		1
MS29513-128	F3	14-5		5
MS29513-129	F3	25-		7
MS29513-131	F3	22-		1
MS29513-134	F3	22-		1
MS29513-137	F3	25-		2
MS29513-138	F3	25-		2
MS29513-210	F3	13-82		2
MS29513-212	F3	14-9		7
MS29513-216	F3	15-22		3
MS29513-218	F3	29-66		2
MS29513-222	F3	26-		2
MS29513-224	F3	53-14		1
MS29513-226	F3	15-29		2
MS29513-227	F3	28-6		3
MS29513-228	F3	39-59D		1
MS29513-234	F3	31-19		1
MS29513-235	F3	29-21		1
MS29513-237	F3	15-60		3
MS29513-240	F3	29-24		1
MS29513-249	F3	21-8		1
MS29513-265	F3	10-		1
MS29513-331	F3	19-30		1
MS29513-337	F3	15-4		1
MS29513-343	F3	15-20		1
MS29513-343	F3	15-10		1
MS35266-66	F3	47-		2
MS35276-261	F3	54-		4
MS35276-263	F3	5-		1
MS35276-264	F3	29-1		28
MS35276-268	F3	56-		2
MS35276-277	F3	54-		4
MS35276-276	F3	54-		6
MS35276-279	F3	44-		25
MS35276-280	F3	43-		75
MS35276-281	F3	54-		4
MS35276-284	F3	54-		4
MS35276-294	F3	54-		15
MS35276-295	F3	44-		22
MS35276-297	F3	40-		8
MS35276-307	F3	44-		9
MS35276-308	F3	55-		10
MS35276-311	F3	54-		4
MS35276-315	F3	59-		2
MS33426-13	F3	42-		32
MS51923-49	F3	14-		1
MS9015-02	F3	2-46		7
MS9015-04	F3	28-14		1
MS9015-08	F3	28-33		2
MS9058-04	F3	37-41		1
MS9058-06	F3	5-		1
MS9058-08	F3	5-		1
MS9101-05	F3	6-		10
MS9101-15	F3	5-		2
MS9102-01	F3	5-		5
MS9102-02	F3	20-		2
MS9102-03	F3	11-		3
MS9102-05	F3	36-		13
MS9102-14	F3	6-		1
MS9102-15	F3	38-		4
MS9102-20	F3	6-		2
MS9102-24	F3	34-86H		1
MS9102-30	F3	38-		1
MS9102-33	F3	12-		4
MS9102-40	F3	5-		7
MS9102-51	F3	20-		13
MS9102-61	F3	36-		1
MS9103-14	F3	6-		11
MS9103-15	F3	36-		1
MS9103-16	F3	36-		3
MS9103-24	F3	6-		4
MS9103-36	F3	20-		1
MS9103-51	F3	36-		3
MS9103-61	F3	38-		1
MS9104-11	F3	5-		3
MS9104-14	F3	20-		6
MS9104-16	F3	6-		1
MS9104-36	F3	38-		1
MS9104-50	F3	5-		1
MS9104-55	F3	20-		6
MS9201-07	F3	2-		8
MS9245-02	F3	15-15A		1
MS9245-29	F3	11-		6
MS9361-15	F3	44-		6
MS9361-17	F3	44-		10
MS9575-06	F3	40-28		36
MS9575-08	F3	40-28		41
MS9575-08	F3	53-		3
NAS1003-1A	F3	13-		2
NAS1003-12A	F3	20-211		1
NAS1003-2A	F3	20-		1
NAS1003-2H	F3	22-		4
NAS1003-3A	F3	20-		11
NAS1003-5H	F3	22-		8
NAS1003-6A	F3	13-		1
NAS1004-1H	F3	7-		6
NAS1004-10A	F3	11-		5
NAS1004-14A	F3	13-		2
NAS1004-15A	F3	37-		4
NAS1004-18A	F3	7-		2
NAS1004-20A	F3	33-		2
NAS1004-25A	F3	13-		2
NAS1004-3A	F3	11-		8
NAS1004-31A	F3	37-		4
NAS1004-4A	F3	20-		2
NAS1004-44	F3	11-		6

PART NUMBER	REPAIR CODE	FIG & INDEX NO	ZONE NO	QTY
NAS1004-5H	F3	22-		13
NAS1004-6A	F3	7-		17
NAS1004-7A	F3	27-		20
NAS1004-8A	F3	11-		38
NAS1005-4H	F3	37-		5
NAS1005-7H	F3	36-		35
NAS1006-1A	F3	20-		1
NAS1006-25A	F3	13-1		8
NAS1006-4H	F3	36-		3
NAS1006-5A	F3	34-372		1
NAS1006-6A	F3	27-		1
NAS1006-7A	F3	6-		1
NAS1007-19H	F3	40-		24
NAS1009-1H	F3	46-		12
NAS1009-16H	F3	15-77B		16
NAS1010-1H	F3	46-		12
NAS1022C12	F3	19-12		1
NAS1023C4	F3	7-		56
NAS1081C06A3N	F3	15-35		1
NAS1101-7H10	F3	26-		6
NAS1101-4H12	F3	26-		8
NAS1101-5H37	F3	26-33		4
NAS1101C06-6	F3	15-38		1
NAS1101C06H6	F3	29-3		4
NAS1101C06H6	F3	29-72		2
NAS1101C3-12	F3	15-26		16
NAS1101C3-7	F3	15-9C		3
NAS1101C3-8	F3	15-49		26
NAS1101C3H10	F3	29-12		1
NAS1101C3H6	F3	39-		2
NAS1101C3H7	F3	13-		2
NAS1101C3H8	F3	29-47		1
NAS1101C4-10	F3	19-4		12
NAS1101C4-12	F3	19-34		4
NAS1102C4-10	F3	39-		2
NAS1102C06-6	F3	15-24		4
NAS1102C3-10	F3	20-		2
NAS1102C3-12	F3	6-		4
NAS1102C3-8	F3	20-		1
NAS1102-3-14	F3	7-		60
NAS1102-4-18	F3	7-		15
NAS1102-4-19	F3	7-		16
NAS1102-6-21	F3	7-		16
NAS1106-20	F3	7-		10
NAS1300-4T12	F3	45-		3
NAS1300C4T12	F3	45-		2
NAS1334A2C04	F2	22-		1
NAS1455C00-4	F3	22-		1
NAS336CPA14	F3	7-		7
NAS43DD3-14	F3	31-166		1
NAS43DD3-16	F3	33-		3
NAS43DD3-24	F3	20-		15
NAS43DD3-32	F3	34-435		5
NAS43DD3-40	F3	31-31		7
NAS43DD3-48	F3	31-32		7
NAS43DD3-56	F3	37-10		2
NAS43DD3-64	F3	31-71		6
NAS43DD3-72	F3	20-		2
NAS43DD3-80	F3	20-		2
NAS43HT3-16	F3	6-		2
NAS43HT3-24	F3	6-		3
NAS43HT3-25	F3	5-		1
NAS43HT3-26	F3	13-		1
NAS43HT3-32	F3	5-		3
NAS43HT3-40	F3	13-		2
NAS43HT3-48	F3	5-		1
NAS43HT3-56	F3	5-		2
NAS43HT3-64	F3	6-		2
NAS43HT3-80	F3	5-		2
NAS501-10-15		44-		15
NAS501-10-17	F3	44-		12
NAS501-10-26	F3	45-		11
NAS501-10H10A	F3	47-		15
NAS501-12-10A	F3	41-		12
NAS501-12-26	F3	44-		16
NAS501-12H10A	F3	44-		32
NAS501-14H11A	F3	44-		4
NAS501-3-10	F3	56-		6
NAS501-3-11	F3	44-		6
NAS501-3-12	F3	44-		15
NAS501-4-10	F3	40-		83
NAS501-4-11	F3	40-		117
NAS501-4-12	F3	40-		73
NAS501-4-13	F3	40-		32
NAS501-4-14	F3	45-		2
NAS501-4-17	F3	51-		2
NAS501-4-20	F3	59-		2
NAS501-4-6	F3	59-		2
NAS501-4-7	F3	45-		17
NAS501-4H11A	F3	60-		2
NAS501-4H5A	F3	47-		8
NAS501-4H6A	F3	43-		2
NAS501-5-10	F3	43-		4
NAS501-5-11	F3	42-		26
NAS501-5-12	F3	42		37
NAS501-5-13	F3	41		16
NAS501-5-14	F3	43-		12
NAS501-5-15	F3	43-		8
NAS501-5-21	F3	43-		4
NAS501-5-31	F3	54-		4
NAS501-5-34	F3	54-		4
NAS501-5H6A	F3	43-		4
NAS501-6-13	F3	56-		2
NAS501-6-14	F3	57-		10
NAS501-6-31	F3	55-		8
NAS501-6H6A	F3	43-		4
NAS501-7-20	F3	45-		17
NAS501-7H5A	F3	45-		7
NAS501-8-14	F3	45-		8
NAS501-8H6A	F3	55-		16
NAS501-9-25A	F3	44-		16
NAS509-6	F3	28-7		4
NAS509-9	F3	44-		16
NAS563-63	F3	13-		2
NAS620A10L	F3	26-		6
NAS620A416L	F3	26-		6
NAS620C416	F3	20-		4
NAS679A3W	F3	11-		9
NAS679A4W	F3	12-		17
NAS679C04W	F3	13-		20
NAS679C3W	F3	5-		237
NAS679C1W	F3	5-		74
NAS679C6	F3	6-		10
NAS679C7	F3	27-		2
NA5-24002T2	F3	36-17A		1
NA5-24002T2	F3	36-33A		1
NA5-24002T2	F3	36-45		1
NA5-24002T2	F3	36-82A		1
NA5-24002T2	F3	36-96		1
NA5-24002T2	F3	36-105		2
NA5-24002T2	F3	37-22		1
NA5-24002T2	F3	37-29		1
NA5-24002T2	F3	37-43		1
NA5-24002T2	F3	37-54		1
NA5-24002T2	F3	37-63		1
NA5-24002T2	F3	37-73A		1
NA5-24002T2	F3	37-82		1
NA5-24003T2	F3	37-94		1
NA5-24007T2	F3	37-112		1
NA5-21002T2	F3	38-135A		1
NA5-260013	F2	6-175		1
NA5-260013	F2	40-27		
NA5-260016	F2	38-55		2
NA5-260031	F3	20-116		1
NA5-260066	F2	10-23		1
NA5-260079T1	F3	5-111A		1
NA5-260079T1	F3	6-53A		1
NA5-260079T1	F3	6-68		1
NA5-260079T2	F3	5-131		1
NA5-260079T2	F3	6-113		1
NA5-260079T2	F3	20-87		1
NA5-260079T2	F3	20-100		1
NA5-260079T2	F3	20-110B		1
NA5-260079T2	F3	20-113A		1
NA5-260079T3	F3	13-34M		2
NA5-260079T4	F3	22-20		1
NA5-260079T6	F3	12-8		1
NA5-260079T7	F3	5-108		1
NA5-260079T7	F3	22-3		1
NA5-260083	F2	20-98		1
NA5-260083	F2	59-45		
NA5-260102	F3	2-22		1
NA5-260102	F3	59-33		
NA5-260116	F2	20-98		1
NA5-260116	F2	59-45		
NA5-260158	F2	20-80		1
NA5-260158	F2	39-84		
NA5-260158	F2	59-35		
NA5-260159	F2	2-32		1
NA5-260159	F2	59-46		
NA5-260162	F3	2-22		1
NA5-260102	F3	59-33		
NA5-260163	F2	5-115		1
NA5-260163	F2	50-1		1
NA5-260163	F2	59-34		
NA5-260274	F3	20-70B		1
NA5-260275	F3	20-70C		1
NA5-26384	D3	11-15		1
NA5-26385	D2	11-14		1
NA5-26753	F2	2-18		1
NA5-26753	F2	59-32		
NA5-26755	F3	59-45		
NA5-26756	F3	20-80		1
NA5-26756	F3	39-84		
NA5-26756	F3	59-35		
NA5-26756	F3	20-80		1
NA5-26757	F2	2-32		1
NA5-26757	F2	59-46		
NA5-26767	F2	26-23		2
NA5-26863	F2	10-30		1
NA5-26881	F3	39-37		1
NA5-26881	F3	59-8		
NA5-26882	F3	39-39		1
NA5-26882	F3	59-11		
NA5-26883	F3	39-40		1
NA5-26883	F3	59-14		
NA5-26884	F3	39-35		1
NA5-26884	F3	59-17		
NA5-27185T15	X	13-14		1
NA5-27185T15	X	13-16		1
NA5-27185T17	X	13-18		1
NA5-27185T17	X	13-20		1
NA5-27215T3	F2	33-19		1
NA5-27215T3	F2	33-57		1
NA5-27215T6	F2	33-21		2
NA5-27215T6	F2	33-22		1
NA5-27215T6	F2	33-114B		1
NA5-27215T6	F2	34-87		1
NA5-27286T19	F3	19-38F		1

PART NUMBER	REPAIR CODE	FIG & INDEX NO	ZONE NO	QTY
NAS-27299T2	F2	2-46		1
NAS-27299T2		43-31		
NAS-27305	F2	22-11		1
NAS-27311	F3	13-6		1
NAS-27330	D3	13-34		1
NAS-27330	D3	13-34A		1
NAS-27333T7	F2	13-38		1
NAS-27336	F3	15-37		1
NAS-27409	M2	19-38F		1
NAS-27412T05	F2	33-54		1
NAS-27412T2	F2	34-201		1
NAS-27412T20	F2	34-224		1
NAS-27412T20	F2	34-114		1
NAS-27112T25	F2	34-342		1
NAS-27112T5	F2	33-78		1
NAS-27412T5	F2	33-80		1
NAS-27414T2	F2	33-60		1
NAS-27414T2	F2	34-82		1
NAS-27440T1P	F2	33-82		1
NAS-27440T1P	F2	34-366		1
NAS-27440T10	F2	33-64		1
NAS-27440T10	F2	34-246		1
NAS-27440T15P	F2	33-46		1
NAS-27440T15P	F2	33-49		1
NAS-27440T15P	F2	34-250		1
NAS-27440T15P	F2	34-274		1
NAS-27440T2	F2	33-41		1
NAS-27440T2	F2	34-201		1
NAS-27440T20	F2	33-67		1
NAS-27440T20	F2	33-74		1
NAS-27440T20	F2	34-224		1
NAS-27440T20P	F2	33-73		1
NAS-27440T25	F2	33-25		1
NAS-27440T25	F2	33-25A		1
NAS-27440T25	F2	33-28		1
NAS-27440T25	F2	33-109		1
NAS-27440T25	F2	34-342		1
NAS-27440T5	F2	33-37		1
NAS-27440T5	F2	34-393		1
NAS-27443	F3	29-6		1
NAS-27556TS1428	D3	39-4A		1
NAS-27556TS1428	D3	39-4B		1
NAS-27556TS1428	D3	39-4C		1
NAS-27556TS1428	D3	39-4D		1
NAS-27556T2214P	D3	39-4E		1
NAS-28056	F3	25-18		1
NAS-28057	F3	14-8		3
NAS-28060	F2	25-24		2
NAS-28183	F2	31-50		1
NAS-28183	F2	31-103		1
NAS-28183	F2	31-126		1
N5000-250H	F3	9-		2
RB0195-002	F3	61-2		AR
RD111-1006-0612	F3	15-57		6
RD111-1006-0916	F3	11-		12
RD111-1007-0105	F3	11-		24
RD111-1007-0406	F3	11-		24
RD111-1009-0304	F3	38-		1
RD111-1009-0305	F3	5-		2
RD111-1009-0412	F3	39-		2
RD111-1009-0413	F3	39-		2
RD111-1009-0414	F3	39-		5
RD111-1009-0417	F3	5-		20
RD111-1009-0430	F3	2-		2
RD111-1009-0437	F3	27-		4
RD111-1009-0509	F3	5-		3
RD111-1009-0512	F3	20-		3
RD111-1009-0517	F3	13-		4
RD111-1009-3409	F3	7-		56
RD111-1009-3413	F3	27-		3
RD111-1009-3416	F3	6-		8
RD111-1009-3417	F3	2-		2
RD111-1009-3425	F3	5-		6
RD111-1009-3508	F3	5-		10
RD111-1009-3619	F3	7-		1
RD111-1009-6316	F3	18-		14
RD111-1009-6319	F3	5-		4
RD111-1009-0406	F3	34-474		1
RD111-1009-6417	F3	13-		5
RD111-1009-6418	F3	5-		4
RD111-1009-6429	F3	13-		8
RD111-1009-6506	F3	36-		3
RD111-1009-6516	F3	15-106		4
RD111-1009-6623	F3	29-11		24
RD111-1010-3418	F3	20		1
RD111-1010-3428	F3	5-		2
RD111-1010-6311	F3	27-		16
RD111-1010-6416	F3	3-		17
RD111-1010-6417	F3	20-		7
RD111-1010-6419	F3	20-		8
RD111-1010-6420	F3	20-		2
RD111-1010-6424	F3	39-		8
RD111-1010-6425	F3	5-		14
RD111-1010-6427	F3	2-		14
RD111-1010-6429	F3	5		2
RD111-1010-6513	F3	20-		1
RD111-1010-6529	F3	36-		6
RD111-1010-6530	F3	2-		2
RD111-1010-6616	F3	20-		1
RD111-1011-0407	F3	33		1
RD111-1011-6407	F3	36-		3
RD111-1011-6413	F3	12-		10
RD111-1011-6419	F3	12-		4
RD111-1011-0429	F3	12		4
RD111-1011-6622	F3	21-5		8
RD111-1015-1010	F3	6-		4
RD111-3001-0606	F3	18-21		4
RD111-3004-0332	F3	24-		1
RD111-3004-0510	F3	22-		5
RD111-3008-0412	F3	33-		8
RD111-3008-0413	F3	23-		8
RD111-3008-0416	F3	33-		4
RD111-3008-0418	F3	32-		11
RD111-3008-0419	F3	33-		4
RD111-3001-1211	F2	15-93		1
RD111-4002-0526	F3	27-		8
RD111-4003-0412	F3	33-		5
RD111-4003-0424	F3	2-		380
RD111-4004-0912	F3	27		24
RD111-4008-0105	F3	33-		12
RD 11-4008-0406	F3	5-		12
RD111-4008-0408	F2	31-51		14
RD111-4008-0409	F3	33-		20
RD111-4008-0412	F3	20-		1
RD111-4008-0419	F3	20-		4
RD111-4008-0442	F3	2-		8
RD111-4008-0506	F3	20-		8
RD111-4008-0508	F3	5		11
RD111-4008-0516	F3	2-		16
RD111-4008-0606	F3	31-52		2
RD111-4008-0608	F3	38-		6
RD111-4008-0621	F3	2-		8
RD111-4008-0622	F3	2-		8
RD111-4008-0106	F3	6-		4
RD111-4008-3405	F3	33-		18
RD111-4008-3408	F3	6-		6
RD111-4008-3414	F3	20		8
RD111-4008-3419	F3	20-		4
RD111-4008-3424	F3	38-		28
RD111-4008-3429	F3	39-		2
RD111-4008-3640	F3	28-23		21
RD111-4008-3642	F3	28-31		2
RD111-4008-6406	F3	5-		8
RD111-4008-6408	F3	33-		12
RD111-4008-6410	F3	5		16
RD111-4008-6418	F3	20-		4
RD111-4008-6610	F3	7-		27
RD111-4008-6624	F3	7-		2
RD111-4008-6626	F3	7-		2
RD111-4008-6632	F3	7-		1
RD111-4009-0408	F3	5-		12
RD111-4009-0410	F3	20-		4
RD111-4009-0419	F3	5-		18
RD111-4009-0420	F3	2-		8
RD111-4009-0421	F3	20-		1
RD111-4009-0518	F3	2-		8
RD111-4009-0520	F3	20-		2
RD111-4009-0522	F3	2-		8
RD111-4009-0521	F3	2-		6
RD111-4009-0528	F3	20-		3
RD111-4009-0609	F3	38		4
RD111-4009-0610	F3	5-		9
RD111-4009-0612	F3	5-		6
RD111-4009-0614	F3	5-		24
RD111-4009-0616	F3	20-		1
RD111-4009-0618	F3	5-		6
RD111-4009-0619	F3	5-		1
RD111-4009-0622	F3	20-		4
RD111-4009-0810	F3	39-		1
RD111-4009-6425	F3	7-		12
RD111-4010-0406	F3	20-		8
RD111-4010-0408	F3	6-		9
RD111-4010-0413	F3	20-		1
RD111-4010-0414	F3	20-		9
RD111-4010-0416	F3	2-		54
RD111-4010-0417	F3	2-		32
RD111-4010-0418	F3	20-		18
RD111-4010-0420	F3	6-		4
RD111-4010-0422	F3	20-		2
RD111-4010-0429	F3	38-		27
RD111-4010-0430	F3	20-		3
RD111-4010-0431	F3	5-		4
RD111-4010-0508	F3	6-		2
RD111-4010-0502	F3	34-169		4
RD111-4010-0514	F3	20-		2
RD111-4010-0516	F3	20-		2
RD111-4010-0611	F3	2-		5
RD111-4010-0614	F3	38-		8
RD111-4010-0619	F3	2-		1
RD111-4010-3824	F3	20-		3
RD111-4010-3409	F3	20-		1
RD111-4010-3615	F3	7-		8
RD111-4010-3821	F3	27-		8
RD111-4010-3825	F3	11-		12
RD111-4010-4448	F3	6-		8
RD111-4010-6407	F3	33-		4
RD111-4010-6408	F3	5-		21
RD111-4010-6409	F3	31-118B		2
RD111-4010-6415	F3	2-		9
RD111-4010-6416	F3	6-		8
RD111-4010-6417	F3	2		4
RD111-4010-6418	F3	20		49
RD111-4010-6419	F3	20		16
RD111-4010-6420	F3	20-		12
RD111-4010-6421	F3	2-		1
RD111-4010-6423	F3	20-		8
RD111-4010-6424	F3	20-		4
RD111-4010-6426	F3	6-		12
RD111-4010-6428	F3	38-		10
RD111-4010-6429	F3	38-		4
RD111-4010-6430	F3	20-32A		8
RD111-4010-6507	F3	31-26		24

PART NUMBER	REPAIR CODE	FIG & INDEX NO	ZONE NO	QTY
RD111-4010-6508	F3	13-		2
RD111-4010-6509	F3	20-		12
RD111-4010-6511	F3	20-		3
RD111-4010-6516	F3	21-14		16
RD111-4010-6519	F3	2-		14
RD111-4010-6521	F3	2-		40
RD111-4010-6522	F3	27-		8
RD111-4010-6525	F3	20-		2
RD111-4010-6526	F3	2-		2
RD111-4010-6608	F3	18-		1
RD111-4010-6626	F3	27-		8
RD111-4011-6411	F3	30-		3
RD111-4011-6414	F3	7-		88
RD111-4011-6416	F3	6		26
RD111-4011-6417	F3	7-		15
RD111-4011-6418	F3	38-		4
RD111-4011-6420	F3	20-		2
RD111-4011-6421	F3	2-		8
RD111-4011-6422	F3	5-		14
RD111-4011-6423	F3	7-		40
RD111-4011-6424	F3	5-		7
RD111-4011-6425	F3	34-270		6
RD111-4011-6426	F3	5-		42
RD111-4011-6427	F3	20-		8
RD111-4011-6428	F3	33-		40
RD111-4011-6429	F3	20		8
RD111-4011-6433	F3	20-		2
RD111-4011-6519	F3	20-		3
RD111-4011-6521	F3	20-		4
RD111-4011-6522	F3	20-		2
RD111-4011-6527	F3	30-		26
RD111-4011-6528	F3	20-		16
RD111-4011-6530	F3	20-		7
RD111-4011-6625	F3	33-		4
RD111-4011-6635	F3	33-		2
RD111-4012-3722	F3	10-		36
RD111-4012-3724	F3	5-		36
RD111-4012-3755	F3	5-		1
RD111-4012-4021	F3	5-		48
RD111-4012-4022	F3	5-		40
RD111-4012-4032	F3	5-		40
RD111-4012-6918	F3	15-77A		24
RD111-4013-3744	F3	5-		32
RD111-4013-3755	F3	5-		2
RD111-4014-0408	F3	39-		240
RD111-4015-0412	F3	34-107		4
RD111-4015-3411	F3	2-		4
RD111-4015-3412	F3	2-		5
RD111-4016-1036	F3	5-		40
RD111-4016-1056	F3	5		40
RD111-4016 1060	F3	5-		48
RD111-4016-1092	F3	5-		46
RD111-6001-0301	F3	56-		6
RD111-6001-0303	F3	59-		2
RD111-6001-0401	F3	51-		29
RD111-6001-0402	F3	50-		4
RD111-6001 0501	F3	56-		10
RD111 6001-0601	F3	58-		12
RD111-6001-1101	F3	41-		4
RD111-9001-0016	F3	5-122A		19
RD111 9001-0018	F3	5-142A		6
RD111 9001 0020	F3	5-134A		7
RD112-5001-1417	F3	10-		24
RD114-1001-0010	F3	13-		2
RD114-1002-0004	F3	22		4
RD114-1002-0005	F3	44-51F		4
RD114-1002-0010	F3	44-51E		2
RD114 1003-1004	F3	6-		18
RD114-1003-1006	F3	5-		2
RD114 1003-1008	F3	5		7
RD114-1005-0002	F3	6-		14
RD114-1005-0004	F3	33-		5
RD114-1005-0013	F3	6-		3
RD114-1007-0004	F3	33-		4
RD114-1007-0013	F3	6-		3
RD114-8001-0003	F3	23-		1
RD114-8003-1003	F3	27-		34
RD114-8003-1004	F3	2-		134
RD114-8003-1005	F3	2-		49
RD114-8003-1006	F3	33-		4
RD114-8003-2004	F3	5-		45
RD114-8003-2005	F3	7-		16
RD114-8005-0004	F3	39-		3
RD114-8005-0007	F3	40-		5
RD114 8005 1004	F3	2-		188
RD114-8005-1005	F3	2-		41
RD114-8005-1006	F3	5-		65
RD114-8005 1008	F3	9-		3
RD114-8005-2004	F3	39-		2
RD114-8005-2006	F3	7-		28
RD114-8005-2007	F3	5-		16
RD114-8005-2010	F3	5-		111
RD122-3001-0708	F3	15-99		2
RD122-3001-0914	F3	15-15		1
RD127-7003-0001	F3	34-68		1
RD127-9001-0824	F3	33-		3
RD127-9001-1220	F3	31-718A		1
RD152-0003-0001	F3	34-15		1
RD153-0030 0004	F3	29-61B		3
RD153-0113-0082	F3	5-122B		8
RD153-0113-0108	F3	13-		2
RD153-0115-0013	F3	15-15B		1
RD153-1002-0003	F3	20-		11
RD153-1002-0004	F3	2-		709
RD153-1002-0005	F3	2-		53
RD153-1002-0006	F3	5-		84
RD153-1002-0008	F3	30-		1
RD153-1003 0003	F3	39-		10
RD153-1004-0014	F3	20-		2
RD153-3003-0001	F3	10-		24
RD153-5001-0004	F3	7-		6
RD153-5001-0005	F3	44-51D		4
RD153-5001 0010	F3	44-51C		2
RD153-5002-0003	F3	5-		5
RD153-5002-0004	F3	2-		813
RD153-5002-0005	F3	2-		249
RD153-5002-0006	F3	2-		180
RD153-5002-0007	F3	5-		10
RD153 5002-0008	F3	4-		12
RD153-5002-0010	F3	5-		32
RD153-5002-0013	F3	6-		4
RD153-5002-0014	F3	6-		3
RD153-5003-0004	F3	5-		10
RD153-5003 0006	F3	20-		8
RD153-5003-0007	F3	5		102
RD153-5003-0009	F3	0-		2
RD153-5004-0003	F3	5-		11
RD153-5004-0004	F3	2-		175
RD153-5004-0005	F3	5-		7
RD153-5004-0006	F3	20-6		12
PD153-9004-0001	F3	20		18
RD170-2028-0001	F3	15-		1
RD170-2032-0001	F3	39-63		1
RD170-2033-0001	F3	39-		1
RD170-8006-XXXX	F3	61-5		1
RD170-8007-XXXX	F3	61-4		1
RD171-0002-0001	F3	61D-1		2
RD171-1020-0001	F3	14-29		4
RD171-1022-0001	F3	1-		1
RD171-1025-0001	F3	1		1
RD171-1027-0001	F3	9-		2
RD171-1041-0001	F3	9-		1
RD171-1052-0001	F3	1-		1
RD171-1052-0002	F3	1-		1
RD171-1052-0003	F3	1-		1
RD172-0001-0001	F3	2-		AR
RD172-0001-0002	F3	27-		AR
RD172-0002-0001	F3	5-		AR
RD172-0003-0001	F3	20-		AR
RD172-0005-0001	F3	5-		AR
RD172-0006-0001	F3	5-		AR
RD172-0007-0001	F3	2-		AR
RD172-0007-0012	F3	5-		AR
RD172-0012-0001	F3	27-		AR
RD172-0014-0006	F3	36-		AR
RD172-0014-0011	F3	5-		AR
RD172-0014-0018	F3	2-		AR
RD172-0014-0027	F3	2-		AR
RD172-0014-0030	F3	5-		AR
RD172-0014-0033	F3	5-		AR
RD172-0014-0039	F3	2-		AR
RD172-0014-0040	F3	5-		AR
RD172-0018-0001	F3	5-		AR
RD172-0018-0025	F3	37-		AR
RD172-0018-0050	F3	5-		AR
RD172-0018-0100	F3	35-		AR
RD172-0018-0125	F3	5-		AR
RD172-0018-0200	F3	36-		AR
RD172-0018-0300	F3	13-		AR
RD172 0018-0400	F3	2-		AR
RD172-0018-0500	F3	33-		AR
LD172-0018-0600	F3	5-		AR
RD173-0018-1000	F3	20-		AR
RD172-0018-1200	F3	6-		AR
RD172-0018-1500	F3	2-		AR
RD172-0018-1750	F3	2-		AR
RD172-0018-2000	F3	2-		AR
RD172-0018-2250	F3	20-		AR
RD172-0018-2500	F3	27-		AR
RD172-0018-3000	F3	13-		AR
RD191-4002-0001	F3	15-32		1
RD191 4002-0003	F3	29-5		1
RD191-4002-0004	F3	13-		1
RD191-4002-1001	F3	31-149		1
RD191-4002-1002	F3	13-		3
RD191-4002-1004	F3	22-		1
RD191-4002-1005	F3	26-2		4
RD251-4071-XXXX	F2	27-87		1
RD251-4072-XXXX	F2	27-85		1
RD251-4080-XXXX	F2	6-103		1
RD251-4082-0431	F2	5-14		1
RD251-4082-0431	F2	6-85		1
RD251-4083-XXXX	F2	20-10		2
RD251-4082-XXXX	F2	20-91		1
RD251-4084-XXXX	F2	33-44		1
RD251-4084-XXXX	F2	34-209		1
RD251-4085-XXXX	F2	20-65		1
RD251-4085-XXXX	F2	20-65A		1
RD251-4087-XXXX	F2	13-7.		1
RD251-4088-XXXX	F2	20-71		1
RD251-4100-XXXX	F2	5-125		1
RD251-4106-XXXX	F2	6-109		1
RD251-4103-XXXX	F2	2-23		1
RD251-4104-XXXX	F2	2-19		1
RD251-4106-XXXX	F2	27-64A		1
RD251-4118-XXXX	F2	2-59		4
RD251-4118-XXXX	F2	2-59A		2
RD251-4125-XXXX	F2	31-55		1
RD251-4125-XXXX	F2	31-108		1
RD251 4125-XXXX	F2	31-131		1
RD251-4129-XXXX	F2	27-64A		1
RD251-4130-XXXX	F2	27-85		1
RD251-4131-XXXX	F2	27-87		1
RD251-4142-XXXX	F2	20-70A		1

PART NUMBER	REPAIR CODE	FIG. & INDEX NO	ZONE NO	QTY
RD251-5001-XXXX	F2	13-76		1
RD261-2006-0010	F3	33-61A		1
RD261-3010-0009	F3	27-97		1
RD261-3010-0018	F3	2-20		5
RD261-3010-0028	F3	27-33		1
RD261-3010-0033	F3	27-86		2
RD261-3010-0036	F3	27-84		1
RD261-3010-0042	F3	27-82		2
RD261-3010-0074	F3	29-43		1
RD261-3010-0157	F3	15-79		1
RD261-3010-0328	F3	10-15		1
RD261-6001-0001	F3	27-114		7
RD262-1002-0004	F3	6-		19
RD262-1002-0006	F3	6-		1
RD262-1002-0008	F3	5-		6
RD262-3001-0002	F3	5-		2
RD262-3001-0004	F3	5-		58
RD262-3001-0006	F3	5-		6
RD262-3001-0008	F3	5-		9
RD262-3001-0012	F3	6		4
RD262-4006-0006	F3	22-		1
RD262-4006-0010	F3	13-		3
RD262-4006-0011	F3	23		2
RD262-4006-0012	F3	22-		1
RD262-4006-0016	F3	19 25		2
RD262-4006-0018	F3	5-		10
RD262-4006-0024	F3	20-		2
RD262-4006-0025	F3	5-		6
RD262-4006-0116	F3	21 10		1
RD262-4006-0121	F3	5-		2
RD262-4006-0141	F3	23-		1
RD262-4006-0146	F3	22-		1
RD262-4006-0210	F3	19-39		1
RD262-4006-0215	F3	19-27		1
RD262-4006-0218	F3	22-		1
RD262-4006-0253	F3	19-8		1
RD262-4006-0334	F3	19-26		1
RD262-4006-0429	F3	19-15		1
RD265-2001-0002	F3	59-		3
RD265-2001-0005	F3	45-41		9
RD265-2001-0004	F3	55-12		1
RD265-2001-0005	F3	45-38		6
RD265-2001-0006	F3	50-		2
RD265-2001-0008	F3	59-		3
RD265-2001-0020	F3	50-37		1
RD265-3004-0002	F3	2-		2
RD265-3004-1002	F3	2-		2
RD265-3004 2002	F3	39 50A		1
RD265-3017-0004	F3	2-26A		3
RD265-5016-0004	F3	40-		1
RD265-5016-0008	F3	50-33		1
RD265-5016-0016	F3	50-41		1
RD265-6002-3004	F3	2-		4
RD265-6002-3005	F3	47-		1
RD265-6009-0001	F3	39-56		1
RD265-6009-0001	F3	39-53		1
RD265 6010-3002	F3	34-		1
RD273-1027-0700	F3	14-27		1
RD273-1027-0900	F3	14-27		1
RD273-2004-2004	F3	36-17		26
RD273-6003-0004	F3	28-15		8
RD393-2006-XXXX	F3	61A-3		2
RD414-1009-0002	D2	39-		1
RD414-1011 0002	D2	39-		1
RD414-1012-0020	D2	15-33		1
RE127-2001-0002	F3	5-		44
RE127 2001 0001	F3	5-		27
RE127-2001-0005	F3	6-		9
RE127-2001-0006	F3	5-		65
RE127-2001-0007	F3	36-5		2
RE127-2001-0008	F3	5-		9
RE127-2001-0010	F3	6-		4
RE127-2001-0012	F3	6-		2
RE127-2001-0014	F3	20-		4
RE127-2001-0016	F3	6-		1
RE127-2001-0018	F3	5-		3
RE127-2001-0020	F3	5-		8
RE127-2001-0026	F3	5-		11
RE127-2001-0033	F3	5-		5
RE127-2001-0043	F3	34-69		7
RE127-2001-0045	F3	31-16		12
RE127-2001-2006	F3	20-		10
RE127-2002-0002	F3	6-		4
RE127-2002-0004	F3	6-		4
RE127-2002-0006	F3	5		38
RE127-2002-0008	F3	20-		1
RE127-2002-0010	F3	20-		11
RE127-2002-0012	F3	13-		1
RE127-2002-0014	F3	20-		5
RE127-2002-0018	F3	5-		2
RE127-2002-0020	F3	5-		8
RE127-2002-0024	F3	6-		9
RE127-2003-0006	F3	27-		4
RE127-2003-0010	F3	5-		9
RE127-2004-0007	F3	31-2		6
RE127-2004-0008	F3	31-3		7
RE127-2004-0009	F3	31-4		80
RE127-2004-0010	F3	31 59		5
RE127-2004-0011	F3	31-5		18
RE127-2004-0012	F3	31-6		48
RE127-2004-0013	F3	31-7		8
RE127-2004-0014	F3	31 8		9
RE127-2004-0015	F3	31-9		21
RE127-2004-0016	F3	34-134		12
RE127-2004-0017	F3	34-300		4
RE127-2004-0018	F3	31-10		4
RE127-2004-0026	F3	34-86G		2
RE127-2005-0005	F3	13-		2
RE127-2005-0006	F3	13-		1
RE127-2005-0007	F3	13-		21
RE127-2005-0008	F3	13-		9
RE127-2005-0009	F3	31-63		19
RE127-2005-0010	F3	31-161		2
RE127-2005-0011	F3	31-13		3
RE127-2005-0012	F3	31-14		26
RE127-2005-0013	F3	34 299		3
RE127-2005-0014	F3	34-138		3
RE127-2005-0015	F3	31-15		21
RE127-2005-0016	F3	34-411		2
RE127-2005-0017	F3	34-300		5
RE127-2005-0018	F3	34 140		3
RE127-2006-0040	F3	34-303		16
RE127-2007-0011	F3	34-474C		1
RE127-2008-0010	F3	39-		16
RE127-2008-0013	F3	39-		1
RE127-2008-0015	F3	34-67		1
RE127-2009-0009	F3	13-		2
RE127-2009-0010	F3	11-		2
RE127 2009-0011	F3	12-		1
RE131-5001-0005	F3	7-		1
RE131-5001-0006	F3	6-		2
RE131 7001-0003	F2	33-		4
RE131-7001-0005	F3	34-498D		1
RE131-7002-0003	F2	33-		4
RE261-3004-0002	F3	2-43		14
RE261-3004-0012	F3	2-40B		
RE261-3004 0002	F3	6 110D		
RE261-3004-0003	F3	9-5		
RE261-3004-0002	F3	9-27		
RE261-3004-0002	F3	10-13		
RE261-3004-0002	F3	15-112		
RE261-3004-0003	F3	27-80		
RE261-3004-0004	F3	2-30B		53
RE261-3004-0004	F3	2-41		
RE261-3004-0004	F3	5-84		
RE261-3004-0004	F3	5-87		
RE261-3004-0004	F3	5-90		
RE261-3004-0004	F3	5-122G		
RE261-3004-0004	F3	5-145		
RE261-3004-0004	F3	6-57		
RE261-3004-0004	F3	6-66		
RE261-3004-0004	F3	6-72		
RE261-3004-0004	F3	6-110F		
RE261-3004-0004	F3	6-179		
RE261-3004-0004	F3	9-2		
RE261-3004-0004	F3	9-9		
RE261-3004-0004	F3	9-25		
RE261-3004-0004	F3	15-54		
RE261-3004-0004	F3	15-87		
RE261-3004-0004	F3	20-258		
RE261-3004-0004	F3	27-24		
RE261-3004-0004	F3	27-92		
RE261-3004-0004	F3	28-13		
RE261-3004-0004	F3	28-88		
RE261-3004-0004	F3	36-97		
RE261-3004-0004	F3	37-23		
RE261-3004-0004	F3	37-30		
RE261-3004-0004	F3	38-22		
RE261-3004-0004	F3	38-33		
RE261-3004-0004	F3	38-71		
RE261-3004-0004	F3	38-77		
RE261-3004-0006	F3	5-149		1
RE261-3004-0008	F3	9-7A		2
RE261-3004-0012	F3	9-7		2
RE261-3004-1002	F3	2-54		10
RE261-3004-1002	F3	9-18B		
RE261-3004-1002	F3	9-45		
RE261-3004-1002	F3	28-10		
RE261-3004-1002	F3	34-261		
RE261-3004-1003	F3	9-31		4
RE261-3004-1004	F3	2-52		41
RE261-3004-1004	F3	5-80		
RE261-3004-1004	F3	6-78		
RE261-3004-1004	F3	9-18		
RE261-3004-1004	F3	11-54		
RE261-3004-1004	F3	27-23		
RE261-3004-1004	F3	27-113		
RE261-3004-1004	F3	28-16		
RE261-3004-1004	F3	36-35		
RE261-3004-1004	F3	36-83		
RE261-3004-1004	F3	36-104		
RE261-3004-1004	F3	36-109		
RE261-3004-1004	F3	37-62		
RE261-3004-1004	F3	37-64		
RE261-3004-1004	F3	38-51		
RE261-3004-1004	F3	38-57		
RE261-3004-1004	F3	38-62		
RE261-3004-1004	F3	38-84		
RE261-3004-1004	F3	38-103		
RE261-3005 1004	F3	2-26B		3
RE273-4001-0001	F3	6-30		1
RE273-4003-0001	F3	5-		1
RE273-4003-0002	F3	6-49		1
RE273-4004-0003	F3	6-43		1
RE273-4004-0004	F3	6-		3
RE273-4005-0001	F3	5-27		1
RE273-4006-0001	F3	5-		1
RE273-5002-0001	F3	6-35		1
RE273-5002 0002		5-62		1
RK393-00003	F3	61D-		1
RK393-00003-002	F3	61D-3		2
RK393-00003-003	F3	61D-3		2
RK393-00003-004	F3	61D-3		2
RK393-00003-006	F3	61D-3		1
RK393-00003-008	F3	61D-4		1
RK393-00003-007	F3	61D-4		1
RK393-00003-008	F3	61D-4		1
RK393-00003-009	F3	61D-4		1
RK393-00003-011	F3	61D-		1

PART NUMBER	REPAIR CODE	FIG & INDEX NO	ZONE NO	QTY
RK393-00003-031	F3	61D-		1
RK393-00003-031	F3	61D-		1
RK395-00024	U	1-		1
RK395-00024	U	40-		
RK395-00024	U	41-		
RK395-00024	U	42-		
RK395-00024	U	43-		
RK395-00024	U	44-		
RK395-00024	U	45-		
RK395-00024	U	46-		
RK395-00024	U	47-		
RK395-00024	U	48-		
RK395-00024	U	49-		
RK395-00024	U	50-		
RK395-00024	U	51-		
RK395-00024	U	52-		
RK395-00024	U	53-		
RK395-00024	U	54-		
RK395-00024	U	55-		
RK395-00024	U	56-		
RK395-00024	U	57-		
RK395-00024	U	58-		
RK395-00024	U	59-		
RK395-00024	U	59-59		1
RK395-00024	U	60-		
RK395-00024	U	61-		
RK395-00026	U	57-		
RK395-00027	U	60-		1
RK395-00028	U	50-		1
RK395-00029	U	58-		1
RK395-00030	U	51-		1
RK395-00032	U	43-		1
RK395-00033	U	55-		1
RK395-00034	U	56-		1
RK395-00035	U	46-		1
RK395-00036	U	44-		1
RK395-00038	U	60-		1
RK395-00039	U	45-		1
RK395-00040	U	44-		1
RK395-00041	U	44-		1
RK395-00044	U	52-		1
RK395-00046	U	48-		1
RK395-00048	U	49-		1
RK395-00049	U	50-		1
RK395-00059	U	59-		1
RK395-00095	U	5-		1
RK395-00096	U	44-		1
RK395-10001		43-21		1
RK395-10002-011		42-3		1
RK395-10002-011		42-6		1
RK395-10002-011		43-12		1
RK395-10002-011		43-18		1
RK395-10002-011		58-3		2
RK395-10002-011		58-9		2
RK395-10004		44-15		2
RK395-10004		44-32		2
RK395-10004		44-61		2
RK395-10004-011		45-7		1
RK395-10004-021		40-15		1
RK395-10004-021		50-25		2
RK395-10004-021		50-39		2
RK395-10004-021		58-20		1
RK395-10006		47-13		1
RK395-10006-011		60-2		1
RK395-10009		48-4		1
RK395-10009		48-12		1
RK395-10010		48-18		1
RK395-10011		45-40		1
RK395-10011		48-5		1
RK395-10011		48-7		1
RK395-10014		48-8		1
RK395-10014-011		48-9		1
RK395-10020		52-19		2
RK395-10020-011		56-25		2
RK395-10020-021		56-32		2
RK395-10023		50-17		2
RK395-10023-011		58-11		1
RK395-10023-011		58-15		1
RK395-10023-021		42-10		1
RK395-10023-021		43-20		1
RK395-10023-021		58-5		2
RK395-10023-051		45-12		2
RK395-10023-051		50-62		
RK395-10024		58-13		1
RK395-10026		40-13		2
RK395-10026		50-40		2
RK395-10026-011		40-12		2
RK395-10026-011		50-36		2
RK395-10031		49-35		1
RK395-10031		49-49A		1
RK395-10031-051		58-56		1
RK395-10031-051		59-57		1
RK395-10042		53-11		1
RK395-10042		53-37		1
RK395-10042		53-50		1
RK395-10042-011		46-30		1
RK395-10061		44-40		1
RK395-10061-011		44-47		1
RK395-10065		40-17		2
RK395-10065		43-3		2
RK395-10072		49-32		1
RK395-10072-011		41-31		2
RK395-10072-011		41-21A		2
RK395-10072-011		44-32A		2
RK395-10100		40-22		119
RK395-10100		44-19		119
RK395-10100		44-35		119
RK395-38006		40-1A		2
RK395-38038		45-35		3
RK395-38038-003		45-14		1
RK395-38040		41-32		1
RK395-40034-011		40-18		1
RK395-40034-011		44-21		1
RK395-40034-011		44-37		1
RK395-40040		45-34		2
RK395-44001-011		51-8		1
RK395-44001-011		59-26		1
RK395-44001-021		40-7		1
RK395-44003		45-26		1
RK395-44003		45-26		1
RK395-44004		45-27		1
RK395-44006		5-116A		1
RK395-44010-011		40-8		1
RK395-44016		45-4		2
RK395-44016		49-3		1
RK395-44032-011		40-1		2
RK395-44032-011		49-6A		1
RK395-44034-021		40-3A		1
RK395-44034-021		45-8		1
RK395-44060-021		43-6		2
RK395-44060-031		43-7		2
RK395-44062-011		43-5		1
RK395-50029		52-20		2
RK395-50029		56-24		1
RK395-50029		58-31		1
RK395-50029-003		56-23		1
RK395-50029-003		56-30		1
RK395-50041		48-13		1
RK395-50041		48-15		1
RK395-50041-005		48-20		1
RS50	F3	15-14		3
RX19145-11		44-51J		1
RX19146-11		44-51H		1
RX19149-11		44-51		2
RX20058-11		44-16		1
RX20058-11		44-49		1
RX20123		50-21		1
RX20123		55-8		1
RX20123		56-11		1
RX20123		56-37		1
RX20138		46-12		1
RX20509	F3	61C-		1
RX20509-2	F3	61C-5		1
RX20509-3	F3	61C-4		2
RX20600		55-14		1
RX20600		55-18		1
RX20601		55-2		1
RX20601		55-15		1
RX20603-11		50-3		1
RX20603-21		53-32		1
RX20603-21		53-41		1
RX20605		56-6		1
RX20605-11		55-19		1
RX20605-11		57-2		1
RX20605-41		57-6		1
RX20607		49-7		1
RX20607		52-2		1
RX20607		52-4		1
RX20607		52-10		1
RX20607		55-11		1
RX20607		56-9		1
RX20607		56-35		1
RX20607-31		57-5		1
RX20607-61		57-3		1
RX20607-81		57-9		1
RX20610-11		44-58		1
RX20610-111		45-10		4
RX20610-151		46-16		1
RX20610-161		44-10		3
RX20610-161		44-25		3
RX20610-161		44-56		3
RX20610-171		59-18		1
RX20610-211		44-11		1
RX20610-211		44-42		1
RX20610-211		49-67		1
RX20610-221		49-48		1
RX20610-221		57-8		1
RX20610-241		51-11		1
RX20610-241		51-15		1
RX20610-241		52-3		1
RX20610-281		55-7		1
RX20610-281		56-2		1
RX20610-301		51-16		1
RX20610-31		45-11		1
RX20610-31		45-17		1
RX20610-31		45-25		1
RX20610-331		53-43		1
RX20610-361		43-9		1
RX20610-361		43-28		1
RX20610-371		43-15		1
RX20615-11		44-2		2
RX20615-11		44-43		2
RX20615-11		45-6		2
RX20615-11		46-2		2
RX20615-11		46-26		2
RX20615-11		49-57		2
RX20615-11		49-65		2
RX20616		50-54		1
RX20617		53-5		1
RX20617		53-25		1
RX20633-17		45-16		1
RX20633-22		45-24		1
RX20633-27		45-23		1

PART NUMBER	REPAIR CODE	FIG & INDEX NO	ZONE NO	QTY
RX20633-27		46-32		1
RX20633-3		53-28		1
RX20633-3		53-48		1
RX20633-3		55-21		1
RX20633-31		46-31		1
RX20633-7		56-20		2
RX20633-7		56-36		1
RX20636		40-11		1
RX20636		50-32		2
RX20836		50-35		1
RX20636		56-23		1
RX20640-11		44-4		2
RX20640-11		44-30		2
RX20640-11		44-53		2
RX20640-11		45-5		2
RX20640-11		47-2		2
RX20640-11		47-7		1
RX20640-11		49-30		2
RX20640-11		49-45		2
RX20641		43-4		1
RX20641		45-2		1
RX20643		45-3		1
RX20645		44-14		1
RX20645		44-27		1
RX20645		44-60		1
RX20645		51-13		1
RX20645		51-34		2
RX20645		54-4		2
RX20645		54-7		1
RX20645		54-15		1
RX20645-11		59-58		1
RX20645-21		59-15		1
RX20653		53-20		1
RX20660-27		51-12		1
RX20660-27		51-42		2
RX20660-27		53-6		1
RX20660-27		53-31		1
RX20660-27		53-40		1
RX20660-29		46-5		1
RX20660-29		46-21		1
RX20660-33		40-5		1
RX20660-33		43-13		2
RX20660-33		43-17		2
RX20660-33		43-22		2
RX20660-33		43-30		1
RX20660-33		45-9		2
RX20660-33		45-43		1
RX20660-33		45-44		2
RX20660-33		45-46		1
RX20660-33		45-47		2
RX20660-33		47-3		1
RX20660-33		47-8		1
RX20660-33		48-2		1
RX20660-33		48-17		1
RX20660-33		49-4		1
RX20660-33		49-5		1
RX20660-33		49-49		2
RX20660-33		49-59		1
RX20660-33		49-69		1
RX20660-33		50-14		1
RX20660-33		51-14		1
RX20660-33		55-9		1
RX20660-33		55-20		1
RX20660-33		55-23		1
RX20660-33		57-11		3
RX20660-33		59-4		2
RX20660-33		59-22		1
RX20660-33		59-24		1
RX20660-33		60-4		1
RX20660-33		60-5		1
RX20660-33		60-8		4
RX20660-33		60-11		4
RX20660-45		40-6		2
RX20660-45		44-8		1
RX20660-45		44-50		1
RX20660-45		46-4		1
RX20660-45		46-17		1
RX20660-45		50-2		1
RX20660-45		50-3		1
RX20660-45		50-50		1
RX20660-45		50-57		1
RX20660-45		51-18		2
RX20660-45		51-45		1
RX20660-45		53-7		1
RX20660-45		53-30		1
RX20660-45		53-39		1
RX20660-45		59-9		1
RX20660-45		59-12		1
RX20660-57		44-9		1
RX20660-57		44-26		1
RX20660-57		44-57		1
RX20660-57		45-29		2
RX20660-57		45-37		2
RX20660-57		46-9		1
RX20660-57		46-31		1
RX20660-57		47-4		1
RX20660-57		47-9		1
RX20660-57		48-3		1
RX20660-57		48-10		1
DELETED				
RX20660-57		50-9		
RX20660-57		50-10		
RX20660-57		50-49		2
RX20660-57		50-51		1
RX20660-57		50-53		1
RX20660-57		50-56		1
RX20660-57		50-61		1
RX20660-57		51-2		1
RX20660-57		51-12		1
RX20660-57		51-19		3
RX20660-57		51-25		1
RX20660-57		51-36		2
RX20660-57		51-47		1
RX20660-57		51-50		1
RX20660-57		51-52		1
RX20660-57		53-3		1
RX20660-57		53-12		1
RX20660-57		53-33		2
RX20660-57		53-42		2
RX20660-57		55-9		1
RX20660-57		56-7		1
RX20660-57		56-16		1
RX20660-57		56-27		1
RX20660-57		59-21		1
RX20660-59		44-13		1
RX20660-59		44-28		1
RX20660-59		44-59		1
RX20660-63		53-4		1
RX20660-65		47-5		1
RX20660-65		47-10		1
RX20660-65		50-24		3
RX20660-65		50-29		1
RX20660-65		50-29A		1
RX20660-65		50-43		1
RX20660-65		51-23		1
RX20660-65		51-28		1
RX20660-65		51-49		1
RX20660-65		51-53		1
RX20660-65		59-25		1
RX20660-67		51-9		1
RX20660-67		51-30		1
RX20660-67		54-2		2
RX20660-67		54-20		2
RX20660-67		59-27		1
RX20660-9		46-3		1
RX20660-9		46-14		1
RX20660-9		51-3		2
RX20660-9		51-44		2
RX20665		40-21		1
RX20665		44-20		1
RX20665		44-36		1
RX20673-41		43-10		1
RX20673-41		43-16		1
RX20673-41		43-27		1
RX20673-41		49-33		1
RX20673-41		49-47		1
RX20673-41		50-22		1
RX20673-41		50-59		2
RX20673-41		51-20		1
RX20673-41		51-31		1
RX20673-41		51-46		1
RX20673-41		53-2		1
RX20673-41		53-18		1
RX20673-41		54-3		2
RX20673-41		54-9		2
RX20673-41		58-47		1
RX20677-15		45-19		1
RX20677-17		45-21		1
RX20682		44-12		1
RX20682		44-24		1
RX20695		44-23		1
RX20695		44-55		1
RX20697-13		44-41		1
RX20697-17		49-31		2
RX20697-17		49-46		2
RX20697-19		44-3		2
RX20697-19		44-44		2
RX20697-19		49-58		2
RX20697-19		49-66		1
RX20697-23		44-5		2
RX20697-23		44-31		2
RX20697-23		44-54		2
RX20700-11		40-1[illegible]		1
RX20700-11		44-17		1
RX20700-11		44-33		1
RX20717-21		46-10		1
RX20717-21		46-19		2
RX20717-31		46-15		1
RX20717-31		46-23		1
RX20717-41		56-14		1
RX20717-41		56-18		1
RX20717-41		56-21		1
RX20717-41		56-34		1
RX20730		47-11		1
RX20730		51-32		1
RX20730		54-17		2
RX20732		54-16		1
RX20732-11		54-18		1
RX20733-21		54-12		2
RX20733-21		54-21		2
RX20758		46-13		1
RX20772-11		46-6		1
RX20772-11		46-20		1
RX20796		50-13		1
RX20796		56-28		1
RX20806		44-6		1
RX20806		44-45		1
RX20814		53-16		1
RX20817		54-10		1
RX20824		54-6		1
RX20824		54-14		1
RX20825-41		44-48		1
RX20832-11		53-17		1
RX20833-11		53-21		1
RX20833-21		53-22		1
RX20833-31		53-19		1

PART NUMBER	REPAIR CODE	FIG & INDEX NO	ZONE NO.	QTY
RX20836		53-24		1
RX20841		40-9		1
RX20841		53-13		1
RX20842		43-2		1
RX20845-21		46-7		4
RX20845-21		52-7		1
RX20845-21		55-5		4
RX20845-21		56-4		4
RX20845-31		53-8		1
RX20845-31		53-34		1
RX20845-31		53-44		1
RX20867		59-53		1
RX20867		59-54		1
RX20867		59-55		1
RX20868-121		45-15		1
RX20868-171		43-23		1
RX20868-171		43-30		2
RX20868-171		49-34		1
RX20868-181		52-11		3
RX20868-191		52-12		1
RX20868-21		46-28		1
RX20868-21		56-17		1
RX20868-41		44-7		1
RX20868-41		44-20		1
RX20884		44-38		2
RX20911		55-10		1
RX20911		56-8		1
RX20911		56-15		1
RX20927		54-11		1
RX50051	U	53-		1
RX50057	U	53-		1
RX50076	U	47-		1
RX50233	U	54-		1
RS-1S	F3	15-113		3
SF703397	F3	38-124		1
SF703397-3	F3	38-		1
SF703401	U	1-7		1
SF703401	U	36-		
SF703401	U	37-		
SF703401	U	38-		
SF703403-3	F3	36-109		1
SF703403-3	F3	37-47		1
SF703403-3	F3	37-58		1
SF703403-3	F3	37-67		1
SF703403-3	F3	36-52		1
SF703405-3	F3	37-77		1
SF703405-3	F3	37-87		1
SF703405-3	F3	38-99		1
SF703406-3	F3	36-86		1
SF703406-3	F3	37-17		2
SF703406-3	F3	38-18		2
SF703413-3	F3	36-100		1
SF703413-3	F3	38-66		1
SF703413-3	F3	38-87		1
SF703419-11	F3	36-21		1
SF703419-11	F3	38-139		1
SF703419-11	F3	38-158		1
SF703601	M1	38-74		1
SF703601-3	M1	38-		1
SF703602	M1	38-68		1
SF703602-3	M1	38-		1
SF703603	M1	38-117		1
SF703603-3	M1	38-		1
SF703607	M1	38-48		1
SF703607-3	M1	38-		1
SF703609	F3	38-25		1
SF703609	F3	38-67		1
SF703610	F3	38-24		1
SF703610	F3	38-66		1
SF703611	F3	38-41		1
SF703612	F3	38-42		1
SF703613	F3	38-150		1
SF703615	F3	38-123		1
SF703616	F3	38-122		1
SF703801-3	F3	36-38		1
SF703801-3	F3	38-107		1
SF703819	F3	36-22		1
SF703819	F3	36-37A		1
SF703819	F3	36-46		1
SF703819	F3	36-84		1
SF703819	F3	36-99		1
SF703819	F3	36-108		1
SF703819	F3	37-16		1
SF703819	F3	37-25		1
SF703819	F3	37-35		1
SF703819	F3	37-46		1
SF703819	F3	37-57		1
SF703819	F3	37-66		1
SF703819	F3	37-75		1
SF703819	F3	37-85		1
SF703819	F3	37-97		1
SF703819	F3	37-115		1
SF703819	F3	38-17		1
SF703819	F3	38-53		1
SF703819	F3	38-58A		1
SF703819	F3	38-64		1
SF703819	F3	38-97		1
SF703819	F3	38-86		1
SF703819	F3	38-105		1
SF703819	F3	38-132		1
SF703819	F3	38-138		1
SF703819	F3	38-149		1
SF703819	F3	38-157		1
SF703820	F3	37-36		1
SF703821	F2	36-20		1
SF703821	F2	36-37		1
SF703821	F2	36-51		1
SF703821	F2	36-65		1
SF703821	F2	36-98		1
SF703821	F2	36-107		1
SF703821	F2	37-15		1
SF703821	F2	37-24		1
SF703821	F2	37-34		1
SF703821	F2	37-45		1
SF703821	F2	37-56		1
SF703821	F2	37-65		1
SF703821	F2	37-74		1
SF703821	F2	37-84		1
SF703821	F2	37-96		1
SF703821	F2	37-114		1
SF703821	F2	38-16		1
SF703821	F2	38-23		1
SF703821	F2	38-34		1
SF703821	F2	38-47		1
SF703821	F2	38-52		1
SF703821	F2	38-58		1
SF703821	F2	38-63		1
SF703821	F2	38-72		1
SF703821	F2	38-78		1
SF703821	F2	38-85		1
SF703821	F2	38-96		1
SF703821	F2	39-104		1
SF703821	F2	38-116		1
SF703821	F2	38-121		1
SF703821	F2	38-131		1
SF703821	F2	38-137		1
SF703821	F2	38-144		1
SF703821	F2	38-150		1
SF703825	F3	37-98		1
SF703825	F3	37-116		1
SF704301	F3	37-11		1
SF704301-11	F3	38-10		1
SF704301-3	F3	37-		1
SF704301-5	F3	38-		1
SF704302	F3	36-16		1
SF704302	F3	38-152		1
SF704302-3	F3	36-		1
SF704302-3	F3	38-		1
SF704304	M1	37-27		1
SF704304-11	M1	38-27		1
SF704304-3	M1	37-		1
SF704304-5	M1	38-		1
SF704306	M1	37-48		1
SF704306-11	M1	38-88		1
SF704306-3	M1	37-		1
SF704306-5	M1	38-		1
SF704307	M1	37-59		1
SF704307-11	M1	38-59		1
SF704307-3	M1	37-		1
SF704307-5	M1	38-		1
SF704308	M1	36-101		1
SF704308-11	M1	36-81		1
SF704308-3	M1	36-		1
SF704308-5	M1	38-		1
SF704309	F3	36-80		1
SF704309-11	F3	38-54		1
SF704309-3	F3	36-		1
SF704309-5	F3	38-		1
SF704310	F3	36-32		1
SF704310	F3	38-100		1
SF704310-3	F3	36-		1
SF704310-5	F3	38-		1
SF704311	F3	37-68		1
SF704311-3	F3	37-		1
SF704316	M1	37-109		1
SF704316-11	M1	38-108		1
SF704316-3	M1	37-		1
SF704316-5	M1	38-		1
SF704318	F3	37-26		1
SF704319	F3	37-89		1
SF704319-11	M1	38-133		1
SF704319-21	M1	38-140		1
SF704319-3	F3	37-		1
SF704319-5	M1	38-		1
SF704319-7	M1	38-		1
SF704320	F3	36-41		1
SF704320-3	F3	36-		1
SF704321	F3	37-79		1
SF704321-3	F3	37-		1
SF704322	M1	36-91		1
SF704322-11	M1	38-79		1
SF704322-3	M1	36-		1
SF704322-5	M1	38-		1
SF704323	M1	37-18		1
SF704323-11	M1	38-19		1
SF704323-3	M1	37-		1
SF704323-5	M1	38-		1
SF704324	M1	37-37		1
SF704324-11	M1	38-35		1
SF704324-21	M1	38-13		1
SF704324-3	M1	37-		1
SF704324-5	M1	38-		1
SF704324-7	M1	38-		1
ST3950010RKL011		41-1		1
ST3950010RKL011		49-62		1
ST3950010RKL012		41-2		1
ST3950010RKL012		49-63		1
ST3950010RKL021		41-3		1
ST3950010RKL021		49-60		1
ST3950010RKL022		41-4		1
ST3950010RKL022		49-61		1

PART NUMBER	REPAIR CODE	FIG & INDEX NO	ZONE NO	QTY
ST3950011RKL001		41-11		1
ST3950011RKL001		49-42		1
ST3950011RKL002		41-12		1
ST3950011RKL002		49-43		1
ST3950012RKL001		41-5		1
ST3950012RKL001		49-40		1
ST3950012RKL002		41-6		1
ST3950012RKL002		49-41		1
ST3950013RKL001		41-9		1
ST3950013RKL001		49-38		1
ST3950013RKL002		41-10		1
ST3950013RKL002		49-39		1
ST3950014RKL001		49-36		1
ST3950014RKL002		49-36A		1
ST3950017RKL005		41-		9
ST3950018RKL003		41-		18
ST3950019RKL003		41-		12
ST3950020RKL011		41-21		1
ST3950020RKL011		49-69		1
ST3950020RKL012		41-22		1
ST3950020RKL012		49-70		1
ST3950020RKL021		41-19		1
ST3350020RKL021		49-71		1
ST3950020RKL022		41-20		1
ST3950020RKL022		49-72		1
ST3950021RKL001		41-15		1
ST3950021RKL001		49-52		1
ST3950021RKL002		41-16		1
ST3950021RKL002		49-53		1
ST3950022RKL001		41-17		1
ST3950022RKL001		49-50		1
ST3950022RKL002		41-18		1
ST3950022RKL002		49-51		1
ST3950023RKL001		41-13		1
ST3950023RKL001		49-54		1
ST3950023RKL002		41-14		1
ST3950023RKL002		49-55		1
ST3950025RKL001		46-27		1
ST3950092RKL011		40-38		1
ST3950092RKL011		45-8A		1
ST3950116RKL003		41-30		2
ST3950116RKL005		41-29		2
ST3950116RKL007		41-28		2
ST3950116RKL009		41-27		2
ST3950116RKL013		41-26		2
ST3950116RKL015		41-25		2
ST3950116RKL017		41-24		2
ST3950116RKL019		41-23		2
ST3950117RKL001		59-41A		1
ST3950117RKL011		59-43A		1
ST3950122RKL001		40-		1
ST3950122RKL001		55-		1
ST3950122RKL003		28-33		2
ST3950122RKL003		40-34		2
ST3950122RKL003		55-12A		2
ST3950122RKL005		28-35		2
ST3950122RKL005		40-25		2
ST3950122RKL005		55-12B		2
ST3950124RKL001		51-22		1
ST3950153RKL001		40-2A		2
ST3950153RKL001		45-6A		1
ST3950154RKL001		40-3D		1
ST3950154RKL001		45-8B		1
ST3950164RKL001		38-8		6
ST3950164RKL001		38-16		6
ST3950164RKL001		42-5		6
ST3950164RKL001		43-11		6
ST3950164RKL011		42-9		5
ST3950164RKL011		43-26		5
ST3950164RKL011		38-6		6
ST3950164RKL021		42-8		1
ST3950164RKL021		43-25		1

PART NUMBER	REPAIR CODE	FIG & INDEX NO	ZONE NO	QTY
ST3950165RKL		58-2		6
ST3950165RKL		58-12		6
ST3950165RKL001		42-2		6
ST3950165RKL001		43-19		6
ST3950173RKL001		40-4		1
ST3950173RKL001		45-6C		1
ST3950180RKL001		40-3C		1
DELETED				
DELETED				
ST3950180RKL011		40-2B		1
ST3950180RKL021		40-2		2
ST3950180RKL021		49-6		2
ST3990041RKL001		41-3		1
ST3990042RKL001		41-19		1
ST3990043RKL001		41-5		1
ST3990044RKL001		41-9		1
ST3990045RKL001		41-15		1
ST3990046RKL001		11-13		1
TA832WSS2-7HT	F3	13-10		1
VSF1015C4	F3	36-16B		80
VSF1015C4	F3	36-32B		
VSF1015C4	F3	36-41B		
VSF1015C4	F3	36-81		
VSF1015C4	F3	36-92		
VSF1015C4	F3	36-93A		
VSF1015C4	F3	36-102		
VSF1015C4	F3	37-12		
VSF1015C4	F3	37-19		
VSF1015C4	F3	37-28		
VSF1015C4	F3	37-39		
VSF1015C4	F3	37-49		
VSF1015C4	F3	37-60		
VSF1015C4	F3	37-69		
VSF1015C4	F3	37-79		
VSF1015C4	F3	37-89		
VSF1015C4	F3	37-109		
VSF1015C4	F3	38-11		
VSF1015C4	F3	38-20		
VSF1015C4	F3	38-28		
VSF1015C4	F3	38-38		
VSF1015C4	F3	38-44		
VSF1015C4	F3	38-49		
VSF1015C4	F3	38-55		
VSF1015C4	F3	38-60		
VSF1015C4	F3	38-69		
VSF1015C4	F3	38-75		
VSF1015C4	F3	38-80		
VSF1015C4	F3	38-89		
VSF1015C4	F3	38-101		
VSF1015C4	F3	38-109		
VSF1015C4	F3	38-118		
VSF1015C4	F3	38-125		
VSF1015C4	F3	38-134		
VSF1015C4	F3	38-141		
VSF1015C4	F3	38-153		
10-435925-141	F3	39-5B		1
10-435925-141	F3	39-52B		1
104001	U	1-		1
104028	U	1-		1
1050-420-10	F3	41-		18
1050-420-12	F3	41-		18
10588	F3	11-18		ALT
1055-10-1B3	F3	46-		6
1095-6-9-5	F3	53-		8
1095-6-14-4	F3	55-		4
1095-6-8-3	F3	46		6
1185-2CNVX245	D3	29-85C		2
1185-2CNV0240	D3	29-85C		2
1191-3CNVX285	F3	19-42H		12
1191-3CNVX285	F3	29-85A		
1191-3CNV0285	F3	29-85A		8

PART NUMBER	REPAIR CODE	FIG & INDEX NO	ZONE NO	QTY
1191-3CNVX380	F3	21-7A		4
1191-4CNVX375	F3	21-29A		23
1191-4CNVX375	F3	24-21		
1191-4CNVX375	F3	29-41A		
1191-4CNVX375	F3	29-85D		
1191-4CNV0375	F3	29-41A		11
1191-4CNV0375	F3	29-85D		
1191-4CNVX500	F3	21-39B		14
1191-4CNVX500	F3	29-85B		
1191-4CNV0500	F3	29-85B		10
1191-5CNVX468	F3	21-39A		32
1191-5CNVX468	F3	39-50C		
1191-5CNV0468	F3	21-39A		24
1191-5CNV0469	F3	21-15A		8
1191-5CNVX625	D3	29-41B		16
1191-5CNV0625	D3	29-41B		
1191-6CNVX562	F3	21-39C		64
1191-6CNV0562	F3	21-39C		
1191-6CNVX562	F3	29-22A		
1191-6CNV0562	F3	29-41C		
1191-6CNV0562	D3	29-41C		
1191-9CNVX750	F3	29-22B		8
1191-9CNVX841	F3	15-113A		24
12100AA2	F3	2-54		10
12100AA2	F3	34-281		
12100AA2	F3	9-16B		
12100AA2	F3	9-15		
12100AA2	F3	28-18		
12100AA3	F3	9-31		4
12100AA4	F3	2-52		41
12100AA4	F3	5-80		
12100AA4	F3	6-78		
12100AA4	F3	9-18		
12100AA4	F3	11-54		
12100AA4	F3	27-23		
12100AA4	F3	27-113		
12100AA4	F3	28-16		
12100AA4	F3	36-35		
12100AA4	F3	36-83		
12100AA4	F3	36-104		
12100AA4	F3	36-106		
12100AA4	F3	37-62		
12100AA4	F3	37-64		
12100AA4	F3	38-51		
12100AA4	F3	38-57		
12100AA4	F3	38-69		
12100AA4	F3	38-84		
12100AA4	F3	38-103		
12100CL4	F3	2-26B		3
12100CL4	F3	2-28B		2
12100CR12	F3	9-7		2
12100CR2	F3	4-43		14
12100CR2	F3	2-46B		
12100CR2	F3	6-110D		
12100CR2	F3	9-5		
12100CR2	F3	9-22		
12100CR2	F3	10-13		
12100CR2	F3	15-112		
12100CR2	F3	27-80		
12100CR4	F3	2-30B		53
12100CR4	F3	2-41		
12100CR4	F3	5-84		
12100CR4	F3	5-87		
12100CR4	F3	5-30		
12100CR4	F3	5-122G		
12100CR4	F3	5-145		
12100CR4	F3	6-57		
12100CR4	F3	6-66		
12100CR4	F3	6-72		
12100CR4	F3	6-110F		

PART NUMBER	REPAIR CODE	FIG & INDEX NO	ZONE NO	QTY
12100CR4	F3	6-179		
12100CR4	F3	9-2		
12100CR4	F3	9-9		
12100CR4	F3	9-25		
12100CR4	F3	15-54		
12100CR4	F3	15-87		
12100CR4	F3	27-24		
12100CR4	F3	27-92		
12100CR4	F3	28-13		
12100CR4	F3	29-88		
12100CR4	F3	36-97		
12100CR4	F3	37-23		
12100CR4	F3	37-30		
12100CR4	F3	38-22		
12100CR4	F3	38-33		
12100CR4	F3	38-71		
12100CR4	F3	38-77		
12100CR6	F3	5-149		1
12100CR8	F3	9-7A		2
12120AL8	F3	13-91		6
12120AL8	F3	13-96		
12120AL8	F3	13-105		
12120CR4	F3	36-95		8
12120CR4	F3	37-20B		
12120CR4	F3	37-33		
12120CR4	F3	38-31		
12120CR5	F3	10-13B		1
12190PC17	F3	9-12		16
125-0750HDP	F3	15-15		1
150101	F3	15-		2
1704-340Y	F3	58-22		1
1704-352Y	F3	58-19		1
1704-466Y	F3	40-24		1
19-206335-1	F3	9-16		1
19-208054-2	F3	9-20		1
19-303857-7	F3	6-		2
19-308912	F3	21-13		1
19-308913	F3	21-27		1
19-406332-13	F3	20-108		1
19-406332-13	F3	20-124		1
19-406332-15	F3	5-116		2
19-406332-15	F3	20-56		2
19-406332-15	F3	20-68		1
19-406332-15	F3	39-38		2
19-406332-17	F3	20-94		1
19-406332-19	F3	20-53		2
19-406332-19	F3	20-55A		1
19-406332-19	F3	20-66		2
19-406332-19	F3	20-69A		1
19-406332-19	F3	39-51		1
19-406332-23	F3	6-90		1
19-406332-23	F3	6-104		1
19-406332-23	F3	27-46A		1
19-406332-23	F3	39-36		1
19-406332-25	F3	6-87		1
19-406332-25	F3	6-80		1
19-406332-25	F3	6-92		1
19-406332-25	F3	20-59		1
19-406332-25	F3	20-72		1
19-406332-29	F3	13-34D		2
19-406332-29	F3	13-34F		1
19-406332-29	F3	13-34K		1
19-406332-29	F3	13-34Q		2
19-406332-3	F3	5-100		1
19-406332-33	F3	6-4		1
19-406332-33	F3	6-94		1
19-406332-33	F3	39-33		1
19-406332-35	F3	20-169		1
19-406332-35	F3	20-170		1
19-406332-5	F3	5-55		1
19-406332-5	F3	9-147		2
19-406332-5	F3	12-5		1
19-406332-5	F3	20-122A		1
19-406332-7	F3	20-58		1
19-406332-7	F3	20-67		1
19-406332-9	F3	5-73		1
19-406332-9	F3	20-11		1
19-406332-9	F3	20-21		2
19-406332-9	F3	20-55		2
19-406332-9	F3	20-92		1
19-406333	F3	5-136		4
19-406333	F3	6-119		4
19-406335-1	F3	20-83		2
19-406336-1	F3	20-107		1
19-406336-1	F3	20-120		1
19-406336-5	F3	20-81		1
19-406336-6	F3	20-103		2
19-406336-6	F3	20-105		1
19-406337-4	F3	27-73		1
19-406337-8	F3	5-130		1
19-406338-1	F3	6-194		1
19-406338-2	F3	39-47		1
19-406340	F3	5-143		1
19-406340	F3	6-121		1
19-406341	F3	33-26		2
19-406341	F3	33-29		2
19-406341	F3	33-38		1
19-406341	F3	33-42		1
19-406341	F3	33-58		1
19-406341	F3	33-65		1
19-406341	F3	33-		1
19-406341	F3	33-110		2
19-406341	F3	34-204		1
19-406341	F3	34-219		1
19-406341	F3	34-347		1
19-406341	F3	34-351		1
19-406341	F3	34-396		1
19-408250	F3	6-127		2
19-408751-1	F3	5-117		1
19-408758-3	F3	39-49		1
19-410070	F2	6-186		1
19-456356	F3	13-25		1
19-456356	F3	59-48		
19-457645	X	12-3		NP
19-457986	D3	10-14		2
19-458784	F2	13-75		1
19-458784	F2	59-52D		
19-459172	F3	13-46		1
19-459172	F3	59-51		
19-459273	F3	13-7		1
19-459710	F3	9-21		1
19-460887	F3	39-65A		1
19-461020	F2	13-70		1
19-461020	F2	59-52C		
19-501743-1	F3	31-169		2
19-501743-11	F3	33-15EE		1
19-501743-12	F3	33-2DD		1
19-501743-12	F3	34-488		1
19-501743-13	F3	13-5		1
19-501743-2	F3	31-34		1
19-501743-2	F3	34-173		1
19-501743-2	F3	31-170		2
19-501743-2	F3	33-10AA		2
19-501743-2	F3	33-10BB		1
19-501743-2	F3	33-10CC		1
19-501743-2	F3	33-14FF		1
19-501743-3	F3	13-4		1
19-501743-3	F3	31-35		2
19-501743-3	F3	34-56		2
19-501743-3	F3	33-5AA		1
19-501743-3	F3	33-5BB		1
19-501743-4	F3	31-36		1
19-501743-4	F3	34-440		1
19-501743-4	F3	34-487		2
19-501743-4	F3	33-1AA		1
19-501743-4	F3	33-2AA		1
19-501743-4	F3	33-2BB		1
19-501743-5	F3	33-9AA		1
19-501743-5	F3	33-11AA		1
19-501743-5	F3	34-3		1
19-501743-6	F3	33-2CC		1
19-501743-6	F3	34-486		1
19-501743-7	F3	33-1DD		1
19-501743-7	F3	33-7AA		1
19-501743-7	F3	33-8AA		1
19-501743-7	F3	33-16CC		1
19-501743-7	F3	34-20		1
19-501743-7	F3	34-28		1
19-501743-7	F3	34-438		1
19-501743-8	F3	33-3DD		1
19-501743-8	F3	34-345		1
19-501743-9	F3	33-4FF		1
19-501743-9	F3	34-181		1
19-501745-12	F3	13-29		1
19-501745-13	F3	33-10FF		1
19-501745-14	F3	33-15FF		1
19-501745-15	F3	31-141		1
19-501745-2	F3	31-37		2
19-501745-2	F3	32-14AA		1
19-501745-2	F3	33-10DD		1
19-501745-3	F3	13-32		1
19-501745-3	F3	31-80		2
19-501745-3	F3	31-96		1
19-501745-3	F3	31-119		1
19-501745-3	F3	33-1CC		1
19-501745-3	F3	34-124		2
19-501745-3	F3	34-439		1
19-501745-4	F3	33-1BB		1
19-501745-4	F3	34-441		1
19-501745-7	F3	33-13AA		1
19-601051	F3	25-13		1
19 651330	X	39-61		1
19-702982	F2	59-1		
19-704105-1	F3	33-9AA		1
19-704105-1	F3	34-11		1
19-704105-2	F3	33-12AA		1
19-704548	F3	31-		
19-704548	F3	33-		
19-704548-1	F3	33-		
19-704548-2	F3	13-		3
19-704548-2	F3	33-		13
19-704548-2	F3	34-		8
19-704548-3	F3	31-		1
19-704548-3	F3	34-		2
19-704548-3	F3	33-		2
19-704548-4	F3	31-		1
19-704548-4	F3	34-		4
19-704548-4	F3	33-		4
19-704548-5	F3	33-		2
19-704549	F3	31-		
19-704549	F3	33-		
19-704549	F3	34-		AR
19-704549-11	F3	35-		1
19-704549-2	F3	33-		3
19-704549-3	F3	13-		2
19-704549-3	F3	31-		1
19-704549-3	F3	33-		2
19-704549-3	F3	34-		2
19-704549-5	F3	33-		2
19-704549-5	F3	34-		1
19-704549-7	F3	33-		3

PART NUMBER	REPAIR CODE	FIG & INDEX NO	ZONE NO	QTY
19-704549-7	F3	34-		2
19-704549-8	F3	33-		1
19-704549-8	F3	34-		1
19-704549-9	F3	33-		1
19-704549-9	F3	34-		1
19-704550	F3	31-		
19-704550	F3	33-		1
19-704550	F3	34-		AR
19-704550-2	F3	31-		1
19-704550-2	F3	33-		2
19-704550-2	F3	34-		2
19-704550-3	F3	33-		4
19-704550-3	F3	34-		1
19-704550-4	F3	33-		2
2000-420	F3	41-		36
201548	F3	9-10		16
201580-3	F3	9-11		16
201581	F3	9-22		1
201582	F3	9-23		1
201599	F3	9-14		58
201599-3	F3	9-14		2
201599-5	F3	9-14		4
208020	F3	9-8		4
208890	F3	6-176		2
209201-101	A1	6-181		1
209201-101	A1	9-		
209201-101	A1	44-1		
209201-111	A1	6-181		1
209201-111	A1	9-		
209201-111	A1	44-1		
209201-121	A1	6-181		1
209201-121	A1	9-		
209201-121	A1	44-1		
209201-41	A1	6-181		1
209201-41	A1	9-		
209201-41	A1	44-1		
209201-51	A1	6-181		1
209201-51	A1	9-		
209201-51	A1	44-1		
209201-61	A1	6-181		1
209201-61	A1	9-		
209201-61	A1	44-1		
209201-71	A1	6-181		1
209201-71	A1	9-		
209201-71	A1	44-1		
209201-81	A1	6-181		1
209201-81	A1	9-		
209201-81	A1	44-1		
209201-91	A1	6-181		1
209201-91	A1	9-		
209201-91	A1	44-1		
209202-101	D1	9-29		1
209202-101	D1	44-22		
209202-111	D1	9-29		1
209202-111	D1	44-22		
209202-31	D1	9-29		1
209202-31	D1	44-22		
209202-45	D1	34 509		
209202-51	D1	9-29		1
209202-51	D1	44-22		
209202-61	D1	9-29		1
209202-61	D1	44-22		
209202-69	D1	9-42		2
209202-71	D1	9-29		1
209202-71	D1	44-22		
209202-73	D1	9-43		2
209204-81	D1	9-29		1
209202-81	D1	44-22		
209202-91	D1	9-29		1
209202-91	D1	44-22		

PART NUMBER	REPAIR CODE	FIG & INDEX NO	ZONE NO	QTY
209210-21	F1	39-64		1
209210-31	F1	39-64		1
209250	D2	2-69		
209250	D2	9-13		1
209250	D2	38-171		
209250	D2	44-39		
209250-11	D2	2-69		
209250-11	D2	9-13		1
209250-11	D2	38-171		
209250-11	D2	44-39		
209634	F3	9-30		4
209634-3	F3	9-30		4
209635	F3	9-32		4
209636	F3	9-33		4
209641	D2	9-19		1
209641	D2	44-46		
209641-11	D2	9-19		1
209641-11	D2	44-46		
209676	F3	9-41		2
209677	F3	9-40		2
209679	F3	9-38		2
209697	F3	9-37		4
209708	X	44-52		
209717-821	A1	6-		NP
209717-831	A1	6-		NP
209717-841	A1	6-		NP
209717-851	A1	6-		NP
209717-871	A1	6-		NP
209717-881	A1	6-		NP
209717-891	A1	6-		NP
209717-901	A1	6-		NP
209717-911	A1	6-		NP
209717-921	A1	6-		NP
21682-31	F3	10-9		2
2228-51	F3	24-18		1
250593	F3	15-44		2
250898-11	D2	6-174		1
250925	F3	6-177		2
302698	F3	28-8		2
302778	F3	28-		1
302779-3	F3	29-35		1
302788	F3	29-36		1
302789	F3	29-17		1
302930	X3	28-		1
302930	X3	56-18		
302930-5	X3	28-23		1
302936	F3	28-75		2
302937	F3	29-70		1
302939	F3	29-80		1
302940	F3	29-81		3
302941	F3	29-22		1
302942	F3	29-14		1
302944	D2	29-74		1
303071	D2	38-44		1
303071	D2	56-20		
303125-11	F2	2-48		1
303174	F3	29-62		1
303269	F3	29-13		1
303269	F3	29-40		1
303478	F1	29-		1
303479	F3	29-37		1
303575	F3	21-25		1
303576	F3	21-12		1
303578	F2	21-24		1
303578	F2	21-38		1
303579	F3	21-22		1
303579	F3	21-36		1
303580	F3	21-23		1
303580	F3	21-37		1
303581	F1	21-7		1

PART NUMBER	REPAIR CODE	FIG & INDEX NO	ZONE NO	QTY
303581-5	F1	21		1
303583	F1	21-		1
303583-3	F1	21-30		1
303584	F1	21-		1
303584-3	F1	21-16		1
303591	F3	21-2		2
303591-3	F3	21-1		2
303774	F3	21-31		1
303774	F3	21-35		1
303778	F3	29-65		1
303853	F2	33-20		1
303853	F2	33-55		1
303853	F2	33-68		1
303853	F2	33-75		1
303853	F2	33-81		1
303853	F2	33-87		1
303853	F2	33-89		1
303853	F2	33-100		2
303853	F2	33-102		2
303853	F2	34-269		1
303853	F2	34-283		1
303854	F2	33-47		1
303854	F2	33-50		1
303854	F2	33-61		1
303854	F2	33-63		1
303854	F2	33-65		1
303854	F2	34-83		1
303854	F2	34-264		1
303854	F2	34-279		1
303854	F2	34-370		1
303854	F2	34-382		1
303855	F2	33-51		1
303855	F2	34-287		1
303861	F2	33-23		2
303861	F2	33-77		1
303861	F2	33-79		1
303861	F2	33-91		2
303915	X2	29-		1
303915	X2	56-33		
303915-3	X2	29-42		1
305955	F3	29-60		1
305956	F3	29-57		3
305967	F3	29-59		1
305971	F3	29-15		1
305983	F3	29-68		1
306066	F2	28-4		1
306069	F2	29-98		1
306070-15	F2	5-127		5
306070-15	F2	6-111		1
306070-15	F2	6-105		1
306261-3	F2	2-29		1
306261-3	F2	2-31		1
306261-5	F2	2-27		1
306866	D1	20-[illegible]		
306866	D1	27-122		
306866	D1	28-1		1
306866	D1	29-		
306866	D1	56-1		
306867	X2	29-		1
306867	X2	56-33		
306867-3	X2	29-42		1
306868	X	29-		1
306868	X	56-12		
306868-3	X	29-66		1
306868-7	X	29-		3
307989	F3	27-88		1
308058-3	F2	27-101		1
309201	U	1-4		1
309201	U	27-		
306209	F3	27-460		1

PART NUMBER	REPAIR CODE	FIG & INDEX NO	ZONE NO	QTY
308206	F2	27-99		1
308211	U	1-1		1
308211	U	2-		
308223-11	M3	6-196A		1
308223-11	M3	27-25		1
DELETED				
308223-5	M3	27-		1
308228	F3	3-14		2
308228	F3	36-39		1
308228	F3	36-53		1
308228	F3	37-76		1
308228	F3	37-86		1
308229	F3	38-98		1
308228	F3	38-106		1
308241	F1	2-12		1
308242	F3	2-10		1
308243	F1	2-38		1
308244	F3	2-36		1
308302-21	D2	28-29A		1
308302-21	D2	55-13		
308302-31	D2	28-29A		1
308302-31	D2	55-13		
308315	U2	35-22		
308355-11	F3	27-105		1
308355-12	F3	27-106		1
308371	F3	28-25A		1
308374	D2	28-26		1
308374	D2	55-17		
308375-11	D1	27-107		1
308375-11	D1	28-		
308375-11	D1	55-		
308375-21	D1	27-107		1
308375-21	D1	28-		
308375-21	D1	55-1		
308375-31	D1	27-107		1
308375-31	D1	28-		
308375-31	D1	55-1		
308375-41	D1	27-107		1
308375-41	D1	28-		
308375-41	D1	55-1		
308375-51	D1	27-107		1
308375-51	D1	28-		
308375-51	D1	55-1		
308375-61	D1	27-107		1
308375-61	D1	28-		
308391		6-207		
308391	F2	31-50		1
308391	F2	31-103		1
308391	F2	31-126		1
308399	F2	31-8		1
308400	F2	20-126		1
308400	F2	21-		
308400	F2	52-1		
308410	F2	39-30		1
308410	F2	56-22		
308437	F2	39-7		1
308441	F2	27-45A		1
308441	F2	39-81		
30844	F2	39-10		1
30846	F2	39-82		1
3085	F2	39-18		1
308503	F2	39-		1
308551-11	F2	2-50		1
308557	F2	43-1		
308563	F2	2-37		1
308564	F2	2-36		1
308565	F2	2-36		1
308630	F2	27-104		1
308631-31	F1	27-96A		1
308631-31	F1	37-1		
308638	M3	39-10		1
308638-3	M3	27-		1
308644	F1	27-103		1

PART NUMBER	REPAIR CODE	FIG & INDEX NO	ZONE NO	QTY
308645	F1	27-104		1
308649	F3	39-6		1
308651	F3	2-53		1
308653	F3	2-62		1
308654	F3	2-		2
308654	F3	2-66		2
308656	F3	20-128D		2
308658	F3	2-17		1
308659	F3	2-5		1
308660	F3	2-9		1
308662	F3	2-1		1
308663	F3	2-6		1
308665	F3	2-4		1
308672	M1	27-30		1
308672-3	M1	27-		1
308673	M1	27-20		1
308673-3	M1	27-		1
308681	X	39-		1
308681	X	56-12		
308681-[illegible]	X	20-86		1
308681 [illegible]	X	39-		3
308744-	F2	17-5		1
308744-	F3	17-4		1
308745	F3	17-3		1
308746	F3	17-		1
308747	F2	17-1		1
308[illegible]	X	17-7		1
308[illegible]	F1	21-26		1
308798	F1	52-18		
308799	D2	21-		1
308799	D2	52-9		
308799-5	D2	21-40A		1
308914	F3	17-6		1
308915	F1	17-		
308915	F1	27-96		1
308915	F1	50-20		
308977	F2	28-74A		1
308977	F2	57-4		
308978	F1	27-58		1
308978	F1	52-7		
309048	F3	21-39		1
309109	F3	39-		1
309109-3	F3	39-10D		1
309109	F3	56-28		
309110	D1	20-263		
309110	D1	27-122		
309110	D1	28-1		1
309110	D1	29-		
309110	D1	56-1		
309126	D2	28-11A		1
309149	D2	28-26		1
309149	D2	55-17		
309149-11	D2	28-26		1
309149-11	D2	55-17		
350		61-1		AR
3502 19-19	F3	19-38B		1
3502-24-04-4803	F3	20-81		4
3502-24-04-4804	F3	20-81		2
3585-06CNVX307	F3	15-70E		2
3585-2CNVX248	F3	15-70B		4
3591-12CNVX1187	F3	15-98A		8
3591-3CNV0285	F3	15-8A		4
3591-3CNV0365	F3	15-8C		3
3591-3CNVX185	F3	15-8A		4
3591-3CNVX285	F3	15-70C		12
3591-3CNVX285	F3	15-87C		6
3591-4CNV0375	F3	15-8B		4

PART NUMBER	REPAIR CODE	FIG & INDEX NO	ZONE NO	QTY
3591-4CNVX375	F3	15-8B		4
3591-4CNVX375	F3	15-70D		8
3591-4CNVX375	F3	15-87A		2
3591-4CNVX375	F3	19-42F		12
3591-4CNVX375	F3	2-59B		2
3591-5CNVX468	F3	15-113C		4
3591-6CNVX562	F3	15-87B		6
3591-6CNVX562	F3	15-70A		8
3591-6CNVX562	F3	19-42G		6
3591-6CNX562	X3	28-30		3
3591-6CNX75	X3	39-62D		1
3591-8CNVX750	F3	22-49A		1
364-17CNVX1.25	F3	9-19A		16
397	F3	39-65		1
402887	F3	19-24		1
402903	F3	15-97		1
402909	F3	15-73		1
402910	F3	15-72		1
402925	F3	15-17		1
402925-3	F3	15-17A		1
403529	F3	22-42		1
403531	F3	22-45		1
403532	F3	22-44		11
403532	F3	22-46		1
403533	F2	22-49		1
403536	F3	22-47		1
404150	F2	19-11		1
404657-55	F3	2-44		1
404657-59	F2	15-109		1
404657-65	F2	2-35		1
404657-67	F2	2-45		1
404673-27	F2	2-34		1
404721	F3	19-18		1
404912	F2	6-120		1
404912	F2	20-261		
404912	F2	36-110		
404912	F2	49-2		
404913	F2	5-142		1
404913	F2	37-120		
404913	F2	49-1		
404920	F2	6-120		1
404920	F2	20-261		
404920	F2	36-170		
404920	F2	49-2		
404920-11	F2	6-120		1
404920-11	F2	20-261		
404920-11	F2	36-170		
404920-11	F2	49-2		
404936	F3	15-5		12
404936	F3	19-38		4
405227	F3	15-90		1
405240	F3	15-85		1
405241	F3	15-68		1
405244	F3	15-63		1
405246	F3	15-75		1
405247	F3	15-65		1
405298	F3	15-		1
405298-11	F3	15-		1
405298-3	F3	15-46		1
405298-5	F3	15-46		1
405304	F3	15-6		1
405304-3	F3	15-6		1
405305	F3	15-7		1
405308	F3	15-51		1
405309	F3	15-27		4
405309	F3	15-50		2
405309	F3	15-51		6
405311	F3	15-89		1
405311-3	F3	15-89A		1
405418	F3	19-20		1

PART NUMBER	REPAIR CODE	FIG & INDEX NO	ZONE NO	QTY
405418	F3	19-18		1
405424	X	19-38D		1
405426	F3	19-38A		1
405427-3	F3	19-33B		1
405428	F3	19-17		1
405432	F3	15-83		2
405433	F3	15-66		4
405667	F2	15		1
405667-3	F2	15-100		1
405694	F3	19-10		1
405954	F3	15-64		1
405957	F3	15-67		1
405960	F3	15-61		AR
405962	F3	15-59		1
405965	F2	15-		1
405965	F2	46-18		
405965-11	F2	15-		1
405965-11	F2	46-18		
405965-3	F2	15-9		1
405965-5	F2	15-9A		1
405992	F3	19-38		1
406067	F2	2-28		1
406067	F2	39-79		
406067	F2	42-4		
406067	F2	43-8		
406068	F2	2-30		1
406068	F2	39-80		
406068	F2	42-7		
406068	F2	43-24		
406069	F2	2-26		1
406069	F2	39-78		
406069	F2	42-1		
406069	F2	43-14		
406069-11	F2	2-26		1
406069-11	F2	39-78		
406069-11	F2	42-1		
406069-11	F2	43-14		
406069-21	F2	2-26		1
406069-21	F2	39-78		
406069-21	F2	42-1		
406069-21	F2	43-14		
406069-31	F2	2-26		1
406069-31	F2	39-78		
406069-31	F2	42-1		
406069-31	F2	43-14		
406070	F2	39-41		1
406070	F2	58-1		
406071	F2	39-50		1
406071	F2	58-10		
406072	F2	37-123		
406072	F2	39-40		1
406072	F2	58-14		
406073	F2	39-44		1
406073	F2	58-4		
406075	F2	39-42		1
406075	F2	58-7		
406110	D1	22-		1
406110	D1	53-15		
406110-3	D1	22-52		1
406112	F3	22-33		1
406113	F3	22-31		1
406114	F3	22-32		1
406115	F3	22-26		1
406116	F3	22-39		1
406118	F1	22-		1
406118	F1	53-23		
406118-3	F1	22-36		1
406214	F3	15-92		1
406340	F2	39-45		1
406350	F2	39-43		2
406550	X	15-		1
406565	F3	5-99		1
406629-11	F2	2-30		
406629-11	F2	42-7		
406629-11	F2	43-24		
406640	F2	2-28		1
406640	F2	39-79		
406640	F2	42-4		
406640	F2	43-8		
406641	F2	2-		NP
406663	X	19-38F		1
407001	U	1-2		
407001	U	5-		
407001	U	6-		
407011	F2	6-84		1
407011	F2	20-262		
407011	F2	50-8		
407138	F3	15-3		1
407151	F3	15-84		1
407154	F3	15-96		1
407156	F3	15-76		1
407474	F2	6-95		1
407474	F2	50-23		
407753	F3	5-114		3
407761	F3	6-189		1
407762	F3	6-191		1
407774-3		33-72A		1
407774-5	F2	34-84		1
407791	F1	5-156		
407791	F1	6-206		
407791	F1	20-74		1
407791	F1	22-		
407791	F1	39-85		
407791	F1	53-1		
407825	F1	5-118		1
407825	F1	18-		
407826	F3	18-5		1
407827	F3	18-4		1
407828	F3	18-3		1
407829	F3	18-1		1
407830	F3	18-2		1
407840	F2	2-39		1
407840	F2	43-20		
407841	F2	2-		1
407870	F2	2-39A		1
407870	F2	43-20		
407871	F2	2-		1
407877	F3	5-115		1
407877	F3	50-1		
407881	F3	2-33		1
408021	F1	15-		1
408021-3	F1	15-101		1
408026	F3	15-91		1
408034	F3	15-82		1
408039	F2	15-79		1
408043	F1	19-		1
408043-3	F1	19-14		1
408044	F3	19-23		1
408045	F3	19-37A		1
408046	F3	19-16A		1
408052	F2	15-		1
408052	F2	46-22		
408052-3	F2	15-88		1
408056	F1	15-		1
408056	F1	46-11		
408056-3	F1	15-71		1
408057	F3	15-25		1
408058	F3	15-16		1
408058-3	F2	15-16A		1
408059	F2	15-28		1
408059-11	F2	15-28		1
408060	F3	15-36		1
408061	F3	15-98		1
408063-11	F2	19-		1
408063-11	F2	47-12		
408064	F3	19-29		1
408230	F3	5-12		2
408231	F3	6-1		4
408231	F3	39-28		5
408232	F3	5-3		3
408232	F3	5-9		1
408232	F3	39-17		5
408233	D3	6-93		1
408236	F2	5-61		1
408236	F2	6-91		1
408236	F2	50-26A		
408242	M3	5-101		1
408242-3	M3	5-		1
408243	F2	6-3		1
408243	F2	27-128		
408243	F2	39-75		
408243	F2	50-38		
408245	D3	5-15		4
408245	D3	27-127		
408245	D3	39-72		
408245	D3	50-31		
408246	M3	5-85		1
408246	M3	27-125		
408246-3	M3	5-		1
408248-11	M3	6-67		1
408248-11	M3	20-256		
408248-5	M3	6-		1
408251	F3	5-51		1
408252	F3	5-49		1
408252	F3	5-49A		2
408264	F2	6-135		1
408264	F2	6-161		1
408265-3	F3	6-129		2
408265-3	F3	6-152		2
408265-3	F3	6-162		2
408265-5	F3	6-132		2
408265-5	F3	6-158		2
408265-7	F3	6-135		2
408265-9	F3	6-145		2
408266	F3	6-131		1
408267	F3	6-165		1
408268	F3	6-157		1
408269	F3	6-150		1
408270	F3	6-143		1
408303	F2	6-126		1
408305	F3	6-25		1
408306	M3	5-24		1
408306-3	M3	6-		1
408307	F3	5-29		1
408310	F3	5-125		2
408312	M3	6-27		1
408312-3	M3	6-		1
408316	F3	6		4
408318-3	F3	6-155		1
408318-5	F3	6-148		1
408318-7	F3	6-141		2
408329	F3	6-		4
DELETED				
408333	M1	6-44		1
408333-3	M1	6-		1
408335	M1	5-82		1
408335-3	M1	5-		1
408336	M1	5-83		1
408336-3	M1	5-		1
408337	M1	5-89		1
408337-3	M1	5-		1
408338	M1	6-39		1
408338-3	M1	6-		1

PART NUMBER	REPAIR CODE	FIG & INDEX NO	ZONE NO	QTY
408339	M1	6-50		1
408339-3	M1	6-		1
408340	M1	6-52		1
408340-3	M1	6-		1
408341-11	M3	6-64		1
408341-5	M1	6-		1
408346	M1	5-91		1
408346-3	M1	5-		1
408348	M1	6-62		1
408348-3	M1	6-		1
408350	F3	5-17		1
408729	F3	7-47		2
408733	F3	6-142		1
408733	F3	6-149		1
408733	F3	6-156		1
408740	F3	5-148		1
408741	F3	6-86A		1
408741	F3	6-91A		1
408750	F3	5-		21
408750	F3	8-		22
408759	F3	29-43		1
408760	F2	5-16		1
408760	F2	39-21		1
408764	F2	5-57		1
408770	F2	2-21		1
408770	F2	2-25		1
408786	F2	2-61		1
408792	F2	2-60		1
408793	F2	27-108		1
408794	F2	28-28		1
408802	F2	5-122		1
408802	F2	49-56		
408804	F2	5-134		1
408804	F2	49-29		
408805	F3	5-123		2
408805	F3	6-112		2
408808	F2	5-137		1
408806	F2	6-117		1
408809	F3	5-		66
408809	F3	8-		66
408810	F3	5-		66
408810	F3	8-		24
408812	F3	5-79		2
408816	F2	6-110		1
408816	F2	27-123		
408816	F2	36-113		
408816	F2	49-64		
408818	F2	6-116		1
408818	F2	27-124		
408818	F2	37-122		
408818	F2	49-44		
408825	F3	5-136		1
408825	F2	6-118		1
408829	F2	5-44		1
408836	M1	6-34		1
408836-3	M1	6-		1
408837	M1	6-11		1
408837-3	M1	6-		1
408838	M3	6-10		1
408838-3	M3	6-		1
408839	M3	6-58A		1
408839-3	M3	5-		1
408840	M3	5-59		1
408840	M3	37-119		
408840	M3	39-187		
408840-3	M3	5-		1
408841	M3	5-18A		1
408841	M3	39-73		
408841-3	M3	5-		1
408845	M3	6-19		1
408845	M3	38-165		
408845-3	M3	6-		1
408847	M1	5-66		1
408847-3	M1	5-		1
408848	F2	6-88		1
408848	F2	50-42		
408848	F2	59-23		
409203	F3	5-		112
409203	F3	6-		110
409203	F3	13-		2
409205	F2	5-94		1
409205	F2	50-58		
409212	M1	5-78		1
409212-3	M1	5-		1
409215	M1	6-73		1
409215-3	M1	6-		1
409256	F3	5-95		2
409256	F3	20-85A		1
409262	F2	6-102		1
409262	F2	59-20		
409263	F3	5-129		1
409270	F2	5-134		1
409270	F2	49-29		
409270-11	F2	5-134		1
409270-11	F2	49-29		
409272	F2	5-122		1
409272	F2	49-56		
409272-11	F2	5-122		1
409272-11	F2	49-56		
409459	F3	15-73A		1
409464	F3	15-15C		1
409465-11	F1	5-128		1
409465-11	F1	6-105		1
409465-11	F1	15-		
409465-11	F1	20-260		
409465-11	F1	20-260A		
409465-11	F1	46-1		
409465-21	F1	5-128		1
409465-21	F1	6-105		1
409465-21	F1	15-		
409465-21	F1	20-260		
409465-21	F1	20-260A		
409465-21	F1	46-1		
409465-31	F1	5-128		1
409465-31	F1	6-105		1
409465-31	F1	15-		
409465-31	F1	20-260		
409465-31	F1	20-260A		
409465-31	F1	46-1		
409468	X1	15-		1
409468	X1	46-25		
409468-3	X1	15-114		1
409468	F3	15-73B		1
409895	F2	39-43A		2
410052	M1	6-184		1
410052	F3	31-190		
410052	F3	34-503		
410052-3	F3	6-		1
410066	F3	6-140		2
410067	F3	6-130		2
410067	F3	6-154		2
410067	F3	6-164		2
410068	F3	6-134		2
410068	F3	6-160		2
410069	F3	6-147		2
410079	F2	5-72A		1
410079	F2	34-502A		
410079	F2	39-82		
410079	F2	50-48		
410080	F3	5-26A		1
410080-3	F3	5-		1
410082	F3	5-154		1
410082	F3	27-126		
410082-3		5-		1
410084	F3	5-28A		1
410086	M3	6-14		1
410086-3	M3	6-		1
410087	F2	6-80		1
410087	F2	50-28		
410088	F2	5-76A		1
410088	F2	39-83		
410088	F2	50-55		
410089	F3	5-53A		1
410089	F3	50-60		
410092	F2	5-19		1
410092	F3	50-34		1
410094	F1	6-136		2
410095	F1	7-11		1
410096	F1	7-12		1
410097-1	F1	7-1		1
410097-2	F1	7-2		1
410098	F3	5-146		1
410098	F3	50-52		
410099	M1	5-153		1
410099	M1	34-501		
410099-3	M3	5-		1
410100-41	F1	7-		1
410100-51	F1	7-		1
410401	F1	7-43		2
410402	F1	7-44		2
410403	F1	7-45		2
410404	F1	7-46		2
410405	F1	7-51		1
410405	F1	7-63		1
410406	F1	7-78		1
410407	F1	7-77		1
410408	F1	7-75		1
410409	F1	7-74		2
410410-31	F1	6-186		1
410410-31	F1	7-		
410411	F1	7-76		1
410413	F1	7-49		1
410414	F1	7-50		1
410415	F1	7-48		1
410419	F1	7-19		1
410420	F1	7-18		1
410421	F1	7-23		1
410422	F1	7-22		1
410631	F3	5-113B		1
410631	F3	6-55D		1
410632	F3	6-183		1
410638-11	F3	6-199		1
410638-5	F3	6-		1
DELETED				
410644-11	F3	6-205		1
410644-5	F3	6-		1
410647	F3	7-16		1
410647	F3	33-120		
410648	F3	7-17		1
410648		[illegible]		
410648		[illegible]507		
410807		[illegible]11A		1
410807	M1	[illegible]107		
410807-3	M1	[illegible]		1
410819	M1	6-198		1
410819	M1	37-29		
410819-3	M1	6-		1
410826	F3	7-98		1
410827	F3	7-97		1
410828	F3	7-99		1

PART NUMBER	REPAIR CODE	FIG & INDEX NO	ZONE NO.	QTY
410835	F2	5-136		1
410835	F2	6-118		1
410836	F2	5-137		1
410836	F2	6-117		1
410837	F2	5-123		2
410837	F2	6-112		2
410906	F2	19-6		1
410908	F2	19-7		1
410909	X1	19-		1
410909	X1	47-6		
410909-3	X1	19-43		1
410910-11	F1	5-124		1
410910-11	F1	6-108		1
410910-11	F1	19-		
410910-11	F1	20-259		
410910-11	F1	20-259A		
410910-11	F1	47-1		
410911	F3	19-6A		1
411027	F2	16-9B		1
420-015-16S	F3	15-34		1
4228-599	F2	24-17		1
425	F3	40-23		AR
425	F3	44-18		
425	F3	44-34		
4451C4493M	F3	2-48		1
453832	D3	13-83		1
453832	D3	13-101		1
453845	D2	11-5		4
455650	F3	10-24		1
456359	F2	13-78		1
456359-11	F2	13-78		1
456369	F3	13-79		1
457080	F3	11-1		32
457081	D3	11-10		6
457082	F3	11-2		16
457087	F3	11-12		16
457089	D2	11-11		1
457089	D2	45-20		
457114	D2	11-3		1
457114	D2	45-18		
457115	D3	11-4		1
457206	F3	13-11		5
457207	F3	13-12		5
457346	F3	13-33		2
457349-13	F3	12-1		1
457501	D3	11-7		10
457857-11	F3	11-32		1
457857-21	F3	11-33		1
457857-31	F3	11-34		1
457857-41	F3	11-35		1
457857-51	F3	11-36		1
457867	F2	11-43		6
457891	D3	11-6		1
457979	D3	10-20		1
457980	D3	10-18		1
457981	F3	10-19		1
457995	D3	10-7		1
457998	D3	10-5		1
458217	F2	10-10		36
458513	F3	13-1A		2
458525	D3	10-27		1
458525	D3	10-25		1
458577	D3	10-26		1
458744	F3	11-30		12
458748	F1	11-31		1
458749	F2	11-20		1
458774	D2	10		1
458777	F2	18-6		1
458777	F2	36-168		
458777	F2	45-39		
458787	F3	13-22		1

PART NUMBER	REPAIR CODE	FIG & INDEX NO	ZONE NO	QTY
458789	F3	13-34B		1
458789		45-42		
458790	M3	13-34C		1
458790		45-45		
458791	F3	13-34E		1
458791	F3	13-34J		1
458796	F3	13-55		1
458797	F2	12-12		1
458797	F2	38-166		
458800-131	A2*	6-180		1
458800-131	A2*	10-		
458800-131	A2*	11-		
458800-131	A2*	12-		
458800-131	A2*	13-		
458800-131	A2*	36-111		
458800-131	A2*	45-1		
458800-141	A2*	6-180		1
458800-141	A2*	10-		
458800-141	A2*	11-		
458800-141	A2*	12-		
458800-141	A2*	13-		
458800-141	A2*	36-111		
458800-141	A2*	45-1		
458800-161	A2*	6-180		1
458800-161	A2*	10-		
458800-161	A2*	11-		
458800-161	A2*	12-		
458800-161	A2*	13-		
458800-161	A2*	36-111		
458800-161	A2*	45-1		
458800-171	A2*	6-180		1
458800-171	A2*	10-		
458800-171	A2*	11-		
458800-171	A2*	12-		
458800-171	A2*	13-		
458800-171	A2*	36-111		
458800-171	A2*	45-1		
459164	D2	12-		1
459164	D2	45-22		
459168	D2	13-59A		1
459173	D3	13-52		1
459174	F3	13-47		2
459175	D2	12-		1
459254	F3	11-56		12
459272	X	13-		3
459537-11	D2	45-13		
459539	F2	11-31A		*
459541	F3	11-58		3
459735	F3	10-3		1
459736	F2	10-17		1
459737	D3	10-1		1
459738	D3	10-8		1
459738	D3	45-26		
459740	D3	10-4		1
459742	D3	10-16		1
459743	F3	10-6		1
459745	D2	10-		1
459748	F2	10-11		1
459748	F2	45-30		
459749	F3	10-2		1
460061	F1	13-31A		1
460062	M3	13-53		1
460065	F3	13-7		1
460105	F3	11-48		6
460179	F3	10-19		1
500182-1161	A2*	6-		NP
460182-1231	A2*	6-		NP
460182-1261	A2*	6-		NP
460182-1271	A2*	6-		NP
460348	M3	13-70		1
460349	M3	59-52B		
460349	D2	11-8		1
460868	F3	13-64		1
460869	F3	13-65		1

PART NUMBER	REPAIR CODE	FIG & INDEX NO	ZONE NO	QTY
460870	F3	13-66		1
460871	F3	13-67		1
460873	F2	13-61		1
460875	F3	13-68		1
460880	F2	2-21		1
460880	F2	2-25		1
460902	D2	11-52		1
460902	D2	45-13		
460902-5	D2	11-57		6
460902-7	D2	11-51		6
460904	F3	13-31A		1
460904	F3	31 191		
460976	F2	13-92		1
460977	F2	13-97		1
460978	F2	13-106		1
460980	F3	13-99		1
460982	F2	12-4		1
460982	F2	13-109		
460982	F2	45-36		
460984	D2	12-		1
460984	D2	45-22		
460985	F2	11-31A		1
460988	F3	13-88		2
461023	F3	13-64		1
461024	F3	13-65		1
5-017 77-545	X	39-62		1
500101C4	F3	5-81		1
500101C4	F3	6-77		1
500101C4	F3	36-94		1
500101C4	F3	37 20		1
500101C4	F3	37-32		1
500101C4	F3	38-30		1
500103C4	F3	5-79		1
500103C4	F3	6-76		1
500103C4	F3	27-21		2
500103C4	F3	27-112		2
500103C4	F3	36-93		1
500103C4	F3	37 20A		1
500103C4	F3	37-31		1
500103C4	F3	38-29		1
500103C8	F3	13-90		1
500103C8	F3	13-95		1
500103C8	F3	13-104		1
500105C4	F3	27-22		2
500116-1	F3	27-115		2
502001	U	1-5		
502001	U	31-		
502932	M1	39-4		1
502935-11	D1	31-173		1
502935-11	D1	31-174		1
502935-111	D1	31-42		1
502935-131	D1	34-53		1
502935-131	D1	33-5B		1
502935-171	D1	31-28		1
502935-171	D1	34-490		1
502935-171	D1	34-491		1
502935-171	D1	33-1A		1
502935-171	D1	33-2A		1
502935-171	D1	33-3B		1
502935-211	D1	34-2		1
502935-211	D1	33-6A		1
502935-211	D1	33-11A		1
502935-301	D1	34-489		1
502935-301	D1	33-2C		1
502935-31	D1	31-171		1
502935-31	D1	31-172		1
502935-341	D1	33-1D		1
502935-341	D1	33-7A		1
502935-341	D1	33-16C		1
502935-341	D1	34-27		1
502935-341	D1	34-442		1

PART NUMBER	REPAIR CODE	FIG & INDEX NO	ZONE NO	QTY
502935-351	D1	33 9A		1
502935-351	D1	34-16		1
502935-41	D1	31-43		1
502935-41	D1	33-10A		1
502935-41	D1	33-10B		1
502935-41	D1	33-10C		1
502935-41	D1	33-14C		1
502935-41	D1	34-125		1
502935-421	D1	33-3D		1
502935-421	D1	34-326		1
502935-481	D1	33-4F		1
502935-481	D1	34-182		1
502935-561	D1	33-15E		1
502935-91	D1	13-3		1
502935-91	D1	31-39		1
502935-91	D1	33-5A		1
502935-91	D1	34-57		1
502936-111	D1	13-2A		1
502936-41	D1	33 2D		1
502936-41	D1	31-492		1
502937-171	D1	33-1B		1
502937-171	D1	34-444		1
502937-171	D1	34-445		1
502937-341	D1	33-13D		1
502937-41	D1	33-10D		1
502937-41	D1	31-41		1
502937-601	D1	33-4A		1
502937-601	D1	33-13A		1
502937-601	D1	34-186		1
502937-611	D1	33-8A		1
502937-611	D1	34-10		1
502937-621	D1	33 12A		1
502937-631	D1	33-14A		1
502937-631	D1	33-14F		1
502937-631	D1	34-126		1
502937-631	D1	34 127		1
502937-71	D1	31-40		1
502937-91	D1	13-31		1
502937-91	D1	31-91		1
502937-91	D1	31-82		1
502937-91	D1	31-97		1
502937-91	D1	31-120		1
502937-91	D1	34-443		1
502937-91	D1	33-1C		1
502938-131	D1	13-30		1
502938-161	D1	33-10F		1
502938 281	D1	33-15F		1
502938-341	D1	31-145		1
502941	F2	13-2		1
502942	F2	31-132		1
502943	F2	31-155		1
502943	F2	34-513		
502944	F2	31-1		1
502944	F2	31 512		
502947	F2	31-88		1
502948	F2	31-56		1
502948	F2	34-511		
502948-11	F2	31 56		1
502948-11	F2	34-511		
502949	F2	31-109		1
502976	F3	34-508		
502976-3	F2	5-136		1
502979	F3	6-		1
502979	F3	31 180		1
502979	F3	34-504		
502980	F3	31-187		1
502980	F3	34-506		
5100-3711	F3	29-58		2
519	F3	55-19A		16
550378	F3	28A-4		2
550652	F3	23-11		1
550653	F3	23-12		1
550654	F3	23-10		1
550655	F3	23-8		1
550656	F3	23-7		1
550657	F3	23-9		1
550658	X	23-		1
550659	X	53-38		
550658-3	X	23-33		1
552894	F3	29-9A		1
552908	F3	23-18		1
554102	X	16-		1
554102	X	46-29		
554102-3	X	16-4		1
554114	F2	16-3		1
554118	F3	16-1		1
554119	F1	16-108		1
554119	F1	16		
554119	F1	46 29		
554129	F3	16-2		1
554471	F3	26-20		4
554472	F3	26-17		2
554474	F3	26-21		2
554476	X1	26-		1
554476	X1	54-13		
554476-3	X1	26-53		1
554477	F3	26-		1
554477-3	F3	26-32		1
554477-5	F3	26-31		1
554478	F3	26-38		1
554479	F3	26-46		1
555143	F3	14 20		4
555144	F3	14-7		3
555145	F3	14-24		1
555146	F3	14-21		2
555147	F3	14-22		1
555149	F3	14-17		2
555152	F3	14-18		1
555157	F3	14-13		2
555157	F3	48-19		
555159	F3	23-6		1
555163	F3	23-19		1
555164	F3	23-5		1
555166	F3	23 26		1
555168	F3	23-20		1
555171	F3	23-14		1
555281	F3	26-27		1
555282	F3	26-35		1
555283	F3	26 28		1
555284	F3	26-12		2
555285	F3	26-13		2
555289	F3	26-22		2
555290	F3	26-24		2
555292	F3	26-16		2
555293	F3	26-51		1
555294	F3	26-48		1
555307	D3	26A-5		2
555309	D3	26A-1		6
555314	D3	26-41		1
555315	D3	26-39		1
555598	F3	23-15		1
555667	F3	23-16		1
555721	F3	26-43		1
556508	F1	26-4		1
556509	F1	26A-6		1
556510	D3	26A-6		1
556511	F1	46-5		1
556568	F3	24-2		4
556908	D3	23-24		2
556917	F1	14-		1
556917	F1	48-6		
556917-3	F1	14-10		1
556918	F1	14-3		2
556918	F1	48-14		
556919	F1	14-		1
556919	F1	48-16		
556919-3	F1	14-12		1
556921	F3	14 25		1
556922	F1	14-		1
556922	F1	48-11		
556922-3	F1	14-4		1
556966	A1	25-12		1
556966	A1	26-		
556966	A1	54-5		
557163	F2	23-		1
557163	F2	23-47		
557163-3	F2	23-3A		1
557199	F2	23-23		1
557200	F1	22-25		1
557200	F1	23-		
557200	F1	53-29		
DELETED				
DELETED				
558060	F2	24-3		1
558075	F1	14-		
558075	F1	12-11		1
558075	F1	38-169		
558075	F1	48-1		
558075-11	F1	12-11		1
558075-11	F1	14-		
558075-11	F1	38-169		
558075-11	F1	48 1		
558338	F3	24-9		1
558339	F3	24-16		1
558340	F3	24-10		1
558341	F3	24-15		1
558342	F3	24 8		1
558343	F3	24-5		1
558344	F3	24-13		1
558346	F2	24-6		1
558347	F3	24-19		1
558348	F3	24-7		1
558349	X	24-		1
558349-3	X	24-22		1
558350	F1	20-179		1
558350	F1	38-172		
558350	F1	21-		
600-201-3/8	F3	13-		12
601091	D2	25-		1
601091	D2	54-8		
601091-3	D2	23-31		1
601094	F3	25-6		2
601094	F3	54-19		
601098	F3	25-		1
601098-3	F3	25-17		1
601445	F3	20 79		1
601483-11	F3	20-75A		1
601485	F3	20-76		1
601486	F3	20-77		3
601601	U	1-3		1
601601	U	20-		
601730	F3	20-33		1
601730	F3	20-40		3
601731	F3	20-28		1
601732	F3	6-82		2
601732	F3	20-18		1
601732	F3	20-30		1
601733	F3	20-62		1
601734	F3	6-83		2
601734	F3	6-192		1
601734	F3	20-19		1
601734	F3	20-31		1
601734	F3	20-38		1

PART NUMBER	REPAIR CODE	FIG & INDEX NO	ZONE NO	QTY
601734	F3	20-45		3
601734	F3	20-63		1
601735	F3	20-16		2
601875	F1	20-125		1
601875	F1	25-		
601875	F1	38-173		
601875	F1	54-1		
601877	F3	20-73		1
601881	F2	20-82		1
601881	F2	51-33		
601881-21	F2	20-82		1
601881-21	F2	51-33		
601882	F3	20-27		1
601883	F3	20-22		2
601884	F3	20-24		1
601893	F3	20-15		2
601894	F3	20-60		1
601895	F3	20-37		1
601895	F3	20-44		3
601898	F3	20-32		1
601898	F3	20-30		3
601898	F3	20-13		1
601901	F3	20-12		1
601909	F2	20-104		1
601909	F2	51-19		
601909-31	F2	20-104		1
601909-31	F3	51-10		
601912	F3	20-127		1
DELETED				
601916	F3	20-159		1
601918	F3	20-157		1
601920	F3	20-155		1
601922-3	F3	5-25		1
601922-3	F3	5-30		1
601922-3	F3	20-153		2
601922-3	F3	20-158		2
601922-3	F3	20-160		1
601922-5	F3	5-26		2
601922-5	F3	20-156		2
601923	F3	20-130		2
601926	F3	20-69		1
601926-11	F3	20-54		1
601927	F3	20-136		1
601931	F3	20-96		1
601932	F3	20-95		1
601933	F3	20-150		1
601934	F3	20-149		1
601935	F3	20-78		1
601936	F3	20-152		1
601937	F3	20-147		1
601945	F3	20-134		1
601946	F3	20-119		1
601950	F3	20-		6
601960	F3	20-145		1
601970	F3	20-114		1
601972	F3	20-154		1
601973	F3	20-106		1
602051	F2	20-123		1
602051	F2	51-41		
602055	F3	20-57		1
602056	F3	51-24		
602057	F3	20-20		1
602057	F3	51-35		
602058	F3	20-138		1
602059	F3	20-137		1
602060	F2	20-110A		1
602060	F2	51-1		
602062	F3	20-132		1
602063	F3	20-128		1
602064	F2	20-84A		1
602064	F2	51-29		
602065	F3	20-90		1
602065	F3	51-51		
602066	F3	20-7		1
602066	F3	51-48		
602066-21	F3	20-7		1
602066-21	F3	51-48		
602069	F3	20-6A		1
602071	F3	20-86A		1
602073	F2	20-64		1
602073	F2	51-43		
602087	F3	20-93		1
602087	F3	39-77		
602087	F3	51-7		
602087	F3	59-26		
602088	F2	20-84		1
602088	F2	37-121		
602088	F2	38-162		
602088	F2	51-43		
602089	F2	20-82		1
602089	F2	38-112		
602089	F2	37-118		
602089	F2	38-161		
602089	F2	51-17		
602090		20-		2
602102	F3	20-70		1
602102	F3	34-500		
602102	F3	37-117		
602102	F3	51-21		
602142	F3	20-181A		1
602143	F3	20-180A		1
602145	F2	20-107		1
602145	F2	59-41		
602146	F2	20-108A		1
602146	F2	59-43		
602155	F2	20-205		1
602156	F2	20-205A		1
602167	F2	20-219		1
602168	F2	20-227		1
602170-3	F3	20-215		1
602170-5	F3	20-218		1
602172	F2	20-187		1
602173	F2	20-190		1
602173	F2	20-237		1
602174	F2	20-199		1
602175	F3	20-228		1
602176	F1	20-196		1
602178	F2	20-253		1
602179	F2	20-252		1
602185	F2	20-234		1
650854	F3	39-56		1
651283	F3	39-31		1
651283	F3	58-18		
651284	F3	39-20		1
651284	F3	58-21		
651287	F3	20-140		1
651287	F3	39-86		
651292	F3	39-48		1
651295	F3	39-24		1
651295-3	F3	39-		1
651296	F3	39-10		2
651297	F3	39-9		2
651298	F3	39-11		1
651327	X	39-60		1
651329-11	F2	39-		1
651337	X	39-62A		1
651339	X	39-67		1
651576	U	1-8		1
651576	U	39-		
651578	F3	39-8		1
651586	F2	39-70		2
651587	F2	39-71		2
651588	F2	39-69		2
651590	F2	39-68A		1
651590-21	F2	39-		1
651590-27	F2	39-68D		1
651591	F3	39-67A		1
651592	F3	39-66A		1
651912	F3	39-53		1
651912-3	F3	38-34		2
651912-3	F3	39-5D		1
651912-3	F3	40-26		2
651912-3	F3	39-54		1
651912-3	F3	55-12C		2
651990-11	F3	39-5		1
651990-11	F3	39-5A		1
651990-11	F3	39-52		1
651990-11	F3	39-52A		1
702561	U	1-6		1
702561	U	33-		
702561	U	34-		
702746	F3	33-117		1
702746	F3	34-88		1
702747	F3	33-118		1
702747	F3	34-91		1
702749	F3	33-104A		1
702749	F3	34-74		1
702810-21	F2	33-52		1
702810-21	F2	34-30		1
702810-21	F2	34-490		1
702820-31	F2	33-62		1
702822-?	F2	34-282		1
703001	F3	33-122		1
703001	F3	34-193		1
703001	F3	34-214		1
703001	F3	34-269		1
703001	F3	34-334		1
703001	F3	34-387		1
703002	F3	33-34		2
703002	F3	33-121		1
703002	F3	34-188		1
703002	F3	34-210		1
703002	F3	34-234		1
703002	F3	34-265		1
703002	F3	34-330		1
703002	F3	34-352		1
703002	F3	34-383		1
703006	F1	33-43		1
703006	F1	34-205		1
703009	F3	33-83B		1
703010	F3	33-86		1
703010	F3	60-3		
703015	F3	60-7		
703017	F3	33-33		2
703017	F3	34-238		1
703021	F3	33-83A		1
703022	F3	33-73		1
703024	F3	33-40		1
703024	F3	34-198		1
703103-3	F3	33-96		1
703103-5	F3	33-97		1
703103-7	F3	33-94		1
703103-7	F3	34-498A		1
703103-7	F3	33-164		
703103-9	F3	33-95		1
703103-9	F3	34-498F		1
703104	F3	5-		4
703104	F3	6-		2
703108-3	F3	5-122		1
703108-5	F3	5-141		1
703109-5	F3	34-499		
703109	F3	33-115		1

PART NUMBER	REPAIR CODE	FIG & INDEX NO	ZONE NO	QTY
703109	F3	34-81		1
703111	F3	5-140		1
703111	F3	6-123		1
703136	F3	33-73A		2
703148	F3	34-243		1
703149	F3	33-30		1
703149	F3	33-111		1
703149	F3	34-348		1
703202-141	F3	27-120		1
703202-141	F3	59-36		
703202-321	F3	27-121		1
703202-321	F3	59-37		
703203-181	F3	33-86		1
703203-181	F3	59-1		
703203-261	F3	33-90		2
703203-261	F3	59-2		
703203-441	F3	33-84		1
703203-441	F3	34-379		1
703203-441	F3	59-3		
703625	F3	33-99		1
703625	F3	60-10		
703626	F3	33-101		1
703626	F3	60-9		
703627	F3	33-106		1
703628	F3	5-121		1
703630	F3	33-105		1
703630	F3	34-76		1
703631	F3	33-104		1
703632	F3	33-31		1
703632	F3	33-112		1
703632	F3	34-330		1
703633	F3	31-183		1
703633	F3	34-505		
703635	F3	31-18		1
703635	F3	31-77		1
703635	F3	34-155		2
703635	F3	34-425		1
703635	F3	34-462		1
703635	F3	33-98		2
703636	F3	33-103		2
703636-1	F3	6-75		1
703636-2	F3	5-39		1
703636-2	F3	34-502		
703901	F3	31-192		
703901-1	F3	31-78		1
703901-1	F3	34-153		1
703901-1	F3	33-92		1
703901-2	F3	33-93		1
703901-2	F3	34-79		1
703901-2	F3	34-154		1
703902	F3	5-139		1
703902	F3	34-146		1
703902	F3	34-310		1
703902	F3	34-413		1
703902	F3	34-446		1
703903	F3	34-151		2
703903	F3	34-304		2
703903	F3	34-423		2
703903	F3	34-460		2
703904	F3	33-17		1
703910	F3	2-16		2
703910	F3	34-510		
703911	F3	33-45		1
703911	F3	33-108		1
703911	F3	34-354		1
703912	F3	6-		1
703913	F3	34-80		1
703913	F3	34-162		1
703916	F3	33-159		1
703917	F3	33-35		1

PART NUMBER	REPAIR CODE	FIG & INDEX NO	ZONE NO.	QTY
703919	F3	34-392		1
703920	F3	34-152		1
703920	F3	34-305		1
703920	F3	34-424		1
703920	F3	34-464		1
703923	F3	20-80		1
703924	F3	2-15		2
703924	F3	20-		2
703935	F3	34-250		1
703938-11	F3	33-13E		NP
703937	X	7-95		
703937	X	33-11D		1
703937-101	X	7-82		
703937-101	X	33-[illegible]8		1
703937-101	X	34-12		1
703937-11	X	7-90		
703937-11	X	31-175		1
703937-111	X	7-91		
703937-111	X	31-44		1
703937-121	X	7-96		
703937-121	X	33-12B		1
703937-131	X	7-83		
703937-131	X	31-98		1
703937-141	X	7-94		
703937-141	X	31-121		1
703937-21	X	7-87		
703937-21	X	33-6B		1
703937-21	X	34-4		1
703937-31	X	7-89		
703937-31	X	33-5C		1
703937-31	X	34-59		1
703937-41	X	33-14G		1
703937-41	X	7-88A		
703937-41	X	34-128		1
703937-51	X	7-81		
703937-51	X	31-83		1
703937-61	X	7-86		
703937-61	X	33-7B		1
703937-61	X	34-29		1
703937-71	X	7-85		
703937-71	X	33-9D		1
703937-71	X	34-21		1
703937-81	X	7-93		
703937-81	X	33-10E		1
703937-91	X	7-84		
703937-91	X	7-92		
703037-91	X	31-45		1
703937-91	X	31-150		1
704476	X	33-3A		1
704476	X	33-3B		1
704476	X	33-3C		1
704476	X	33-4B		1
704476	X	33-4C		1
704476	X	33-4D		1
704476	X	33-13C		1
704476	X	33-15A		1
704476	X	33-15B		1
704476	X	33-15C		1
704476	X	33-15D		1
704476	X	33-16/		1
704476	X	33-16B		1
704476	X	34-183		1
704476	X	34-185		1
704476	X	34-187		1
704476	X	34-327		1
704476	X	34-329		1
704476	X	34-328		1
704476-21	X	33-4E		1
704476-21	X	33-13B		1
704476-21	X	34-184		1

PART NUMBER	REPAIR CODE	FIG & INDEX NO.	ZONE NO	QTY
704501	F3	5-121A		1
704501	F3	34-222		1
704502	F3	34-75		1
704502	F3	34-219		1
704503	F3	34-356		1
704504	F3	34-361		1
704506	F3	34-230		1
704506	F3	60-9		
704526	F2	33-3		1
704526	F2	34-288		1
704527	F2	33-7		1
704527	F2	34-20		1
704528	F2	33-4		1
704528	F2	34-129		1
704529	F2	33-8		1
704529	F2	34-9		1
704530	F2	33-9		1
704530	F2	34-18		1
704531	F2	33-1		1
704531	F2	34-307		1
704532	F2	33-2		1
704532	F2	34-446		1
704533	F2	33-6		1
704533	F2	34-31		1
704534-11	F2	33-14		1
704534-11	F2	34-60		1
704535	F2	33-13		1
704536	F2	33-10		1
704537	F2	33-15		1
704538	F2	33-0		1
704538	F2	34-1		1
704539	F2	33-16		1
704540	F2	33-11		1
704541	F2	33-12		1
704542	F2	13-		1
772	F3	15-40		1
8-249N602-7	F3	21-0		2
812-2-3V	F3	24-20		1
9512-848327-14	F3	22-48		1

MANUAL DATA SUPPLEMENTS

Manual Data Supplements are issued from time to time to communicate important and urgent information concerning the equipment covered in this manual. These supplements bear an identifying number and should be filed in this Appendix.

Manual Data Supplements directly affect the data in this manual and will be incorporated into this manual during a future updating effort.

A Manual Data Supplement Record is issued periodically to indicate the status of supplements issued for this manual. The status of each supplement is indicated in the "Supplement Status" column. For active supplements, no status is entered. For incorporated supplements, "Incorporated" is entered.

Upon receipt of a Manual Data Supplement, make an appropriate reference to the supplement in the margin next to the data supplemented and enter the number, date, and subject matter of the supplement on the Manual Data Supplement Record.

MANUAL DATA SUPPLEMENT RECORD

This Manual Data Supplement Record indicates the status of supplements issued for Technical Manual R-3896-4. Supplements that have been incorporated into this manual shall be removed from the Appendix and destroyed.

Supplement Number	Dated	Description	Supplement Status
R-3896-4-1	1 May 1969	Corrects screw part number on gas generator ball valve assembly.	Incorporated
R-3896-4-2	13 May 1969	Corrects the drain adapter part number on the thrust chamber body assembly.	Incorporated
R-3896-4-3	23 June 1969	Identifies interchangeability of hypergol manifold outlet hose assembly NA5-260163-1 on engines F-2017 and subsequent.	Incorporated
R-3896-4-4	29 September 1969	Adds spares replacement modification identification plates.	Incorporated
R-3896-4-5	30 January 1970	Clarifies use of oxidizer inlet closures.	Incorporated
R-3896-4-6	6 April 1970	Changes an index number and adds a loose equipment part number to figure 39.	Incorporated

Supplement Number	Dated	Description	Supplement Status
R-3896-4-7	9 April 1970	Changes descriptions and reference designations for flight instrumentation listings.	Incorporated
R-3896-4-8	21 April 1970	Deletes unused parts, adds a protective closure, adjusts quantities in the Group Assembly Parts List, and corrects the Numerical Index.	Incorporated
R-3896-4-9	30 April 1970	Adds alternate parts in the Group Assembly Parts List and Numerical Index.	Incorporated
R-3896-4-10	18 May 1970	Adds parts and revises quantities in the Group Assembly Parts List and Numerical Index.	Incorporated
R-3896-4-11	18 June 1970	Identifies oxidizer dome purge and bearing coolant control valve orifice plate sizes.	Incorporated
R-3896-4-12	16 September 1970	Reverses index numbers for fuel valve orifices.	Incorporated
R-3896-4-13	17 November 1970	Adds shielding and shorting caps for high-voltage igniters.	Incorporated
R-3896-4-14	18 June 1971	Corrected part number of flowmeter flange seal.	Deleted
R-3896-4-15	9 July 1971	Deleted Supplement R-3896-4-14.	
R-3896-4-16	13 July 1971	Corrects part number of monitoring port plug.	Incorporated
R-3896-4-17	27 July 1971	Changes part number of plate attaching screw.	Incorporated
R-3896-4-18	6 August 1971	Adds breakdown for start and stop solenoid valves.	Incorporated
R-3896-4-19	7 March 1972	Adds alternate part.	Incorporated